
KC
TRANS PARTS

(DOMESTIC)

TABLE OF CONTENTS

TRANSMISSION	PAGES	SER#
[GENERAL MOTORS]		
[TH125 / TH125C] (3T40)	8 - 20	75
[TH180 / TH180C] (3L30 / 4L30E)	22 - 35	54
[TH200 / TH200C / TH200-4R]	36 - 52	65
[TH325 / TH325-4L]	54 - 65	65
[TH350 / TH350C / TH250 / TH250C]	68- 80	35
[TH400 (3L80) / 4L80E / 4L85E]	82 - 104	34
[4T40E / 4T45E]	106 - 114	33
[TH440-T4 / 4T60E / 4T65E]	116 - 141	84
[4T80E]	142 - 151	72
[TH700-R4 / 4L60E / 4L65E]	152 - 178	77
[5L40E / 5L50E]	180 - 189	55
[6L45 / 6L50 / 6L80 / 6L90]	190 - 199	135
[6T70 / 6T75]	200 - 207	115
ALLISON [1000 / 2000 / 2400]	208 - 216	37
ALLISON [AT540 / 543 / 545]	218 - 224	11
[MX17] (SPRINT / SUZUKI)	226 - 231	89
SATURN [TAAT]	232 - 238	95
SATURN CVT [VT20 / VT25E]	240 - 245	105
ALUMINUM POWERGLIDE	246 - 251	28
[ST300] SUPER TURBINE 300	252 - 254	38
GM / SPEED-O GEARS	256 - 258	GM
[FORD]	**PAGES**	**SER#**
[FMX / BW8-12]	260 - 266	6
[C-4 / C-5]	268 - 278	26
[C-3 / A4LD / 4R44E / 4R55E / 5R55E]	280 - 300	56
[5R55S / 5R55W / 5R55N]	302 - 311	56
[C-6 / E40D / 4R100]	312 - 335	36
[5R110W] (TORQUE SHIFT)	336 - 343	36
[AOD / AODE / 4R70W / 70E / 4R75W / 75E]	344 - 364	76
[ZF6HP26 / 6R60 / 6R80]	366 - 375	116
[ATX]	376 - 383	86
[AXOD / AXODE / AX4S / AX4N / 4F50N]	384 - 407	96
[CD4E]	408 - 417	73
[4F27E / FNR5]	418 - 427	46
[TF-81SC / AF21 / TF-80SC / AF40]	428 - 434	106
[6F50 / 6F55]	200 - 207	115
MAZDA / FORD (2-PAN) [G4A / GF4A/4EAT-G]	542 - 553	71

TRANSMISSION	PAGES	SER#
[FORD] cont.		
MAZDA / FORD (1 PAN) [F4A-EL / F4EAT / 4EATE-F]	554 - 561	74
[CHRYSLER]	**PAGES**	**SER#**
[TF6 / A904 / A500]	436 - 456	12
[TF8] (A727) [A518] [A618] (46RH / 46RE / 47RE / 48RE)	458 - 479	22
[45RFE / 5-45FE]	480 - 487	44
[42RLE] (RWD)	488 - 494	61
[A404 / A413 / A470 / A670]	496 - 506	32
[A604] (40TE / 41TE-FWD) (41AE-AWD)	508 - 519	92
[A606] (42LE)	520 - 528	61
[BORG WARNER]	**PAGES**	**SER#**
[BW T35]	530 - 531	19
[BW T35TB / BW37TB]	532 - 534	19
[BW T65 / BW T66]	536 - 540	19
****VENDOR ADS****	**PAGES**	
*ALLOMATIC TRANS PARTS	115	
*ROSTRA	217	
*BORG WARNER	81	
*DACCO CONVERTERS	435	
*RAYBESTOS Power Train	115	
*SONNAX (ZIP KIT)	179	
*SUPERIOR TRANS. PARTS INC.	301	
*TRANStec	Back of Front Cover	
*LUBE GARD	Back Cover	
****MISC.****	**PAGES**	
*TECHNICAL MANUALS	562 - 563	
*SPEED-O GEAR (Ratio Chart)	255	
*ENGINE CONVERSION GUIDE	6	
*VINTAGE TRANSMISSIONS	7	
*TRANSAVER (Trans. Oil Coolers)	67	

Model Year Identification

Unless otherwise specified, years expressed in this catalog refer to the model year of the vehicle Use the chart below to identify the model year represented by the 10th digit of the VIN (Vehicle Identification Number). The VIN is found on a sticker located on the driver's door and on a metal plate located at the bottom of the driver's side front windshield.

Code	Year
A=	1980
B=	1981
C=	1982
D=	1983
E=	1984
F=	1985
G=	1986
H=	1987
J=	1988
K=	1989

Code	Year
L=	1990
M=	1991
N=	1992
P=	1993
R=	1994
S=	1995
T=	1996
V=	1997
W=	1998
X=	1999

Code	Year
Y=	2000
1=	2001
2=	2002
3=	2003
4=	2004
5=	2005
6=	2006
7=	2007
8=	2008
9=	2009

Code	Year
A=	2010
B=	2011
C=	2012
D=	2013
E=	2014
F=	2015
G=	2016
H=	2017
J=	2018
K=	2019

REBUILER KIT DEFINITIONS

Gasket & Rubber Kit
*Includes all Gaskets, Rubber O-Rings, Lip Seals and Lathe Cut Seals

Overhaul Kit
*Gasket & Rubber Kit, Metal Clad Seals, and Sealing Rings

Banner Kit
*Gasket & Rubber Kit, Metal Clad Seals, Sealing Rings, & Friction Clutches

Master Kit
*Gasket & Rubber Kit, Metal Clad Seals, Sealing Rings, Friction Clutches, & Steel Clutches

Engine Conversion Guide

Cylinders	Cubic Inches	Liters
AMC / JEEP		
L-4	150"	2.5L
L-6	232"	3.8L
L-6	242"	4.0L
L-6	258"	4.2L
V-6	173"	2.8L
V-8	304"	5.0L
V-8	350"	5.7L
V-8	360"	5.9L
V-8	401"	6.6L
CHRYSLER		
L-4	105"	1.7L
L-4	135"	2.2L
L-4	153"	2.5L
L-4	156"	2.6L
L-6	181"	3.0L
V-6	201"	3.3L
V-6	213"	3.5L
CUMMINS		
L-4	239"	3.9L
FORD		
L-4	122"	2.0L
L-4	140"	2.3L
L-4	153"	2.5L
L-6	170"	2.8L
L-6	200"	3.3L
L-6	240"	3.9L
L-6	250"	4.1L
V-6	255"	4.2L
L-6	300"	4.9L
V-6	171"	2.8L
V-6	177"	2.9L
V-6	183"	3.0L
V-6	245"	4.0L
V-6	232"	3.8L
V-8	255"	4.2L
V-8	280"	4.6L
V-8	289"	4.7L
V-8	302"	5.0L
V-8	329"	5.4L
V-8	351"	5.8L
V-8	352"	5.8L
V-8	360"	5.9L
V-8	390"	6.4L
V-8	400"	6.6L
V-10	415"	6.8L
V-8	427"	7.0L
V-8	428"	7.0L
V-8	429"	7.0L
V-8	460"	7.5L

Cylinders	Cubic Inches	Liters
GENERAL MOTORS		
L-4	98"	1.6L
L-4	112"	1.8L
L-4	122"	2.0L
L-4	134"	2.2L
L-4	138"	2.3L
L-4	140"	2.3L
L-4	151"	2.5L
L-6	250"	4.1L
L-6	292"	4.8L
V-6	173"	2.8L
V-6	181"	3.0L
V-6	189"	3.1L
V-6	196"	3.2L
V-6	200"	3.3L
V-6	204"	3.3L
V-6	207"	3.4L
V-6	229"	3.8L
V-6	231"	3.8L
V-6	252"	4.1L
V-6	262"	4.3L
V-8	252"	4.1L
V-8	260"	4.3L
V-8	262"	4.3L
V-8	265"	4.3L
V-8	267"	4.4L
V-8	283"	4.6L
V-8	300"	4.9L
V-8	301"	4.9L
V-8	305"	5.0L
V-8	307"	5.0L
V-8	326"	5.3L
V-8	340"	5.6L
V-8	350"	5.7L
V-8	368"	6.0L
V-8	379"	6.2L
V-8	389"	6.4L
V-8	396"	6.5L
V-8	400"	6.6L
V-8	402"	6.6L
V-8	403"	6.6L
V-8	421"	6.9L
V-8	425"	7.0L
V-8	427"	7.0L
V-8	428"	7.0L
V-8	454"	7.4L
V-8	455"	7.4L
V-8	472"	7.7L
V-8	500"	8.2L

For any engine not listed, use conversion multipliers:
Cubic Inches to Liters **X** Cubic Inches by (.016395)
Liters to Cubic Inches **X** Liters by (61.025)

VINTAGE TRANSMISSIONS

TRANSMISSION	DESCRIPTION	QTY	YEAR	PART #
Buick Dynaflow (Cast Iron Case)	Master Kit	1	1961- 63	**DK500E**
	Master Kit	1	1948-56	**DK500F**
	Master Kit	1	1957-60	**DK500G**
	Overhaul Kit	1	1948-56	**K5080F**
	Overhaul Kit	1	1957-60	**K5080G**
Buick Special (Aluminum Case)	Master Kit	1	1961-63	**DK500S**
	Overhaul Kit	1	1961-63	**K25900**
Powerglide (Cast Iron Case)	Master Kit	1	1950-52	**DK800**
	Master Kit	1	1953-54	**DK800A**
	Master Kit	1	1955-62	**DK800X**
	Overhaul Kit	1	1950-52	**K8900**
	Overhaul Kit	1	1953-54	**K8900A**
	Overhaul Kit	1	1955-62	**K8900X**
Turboglide	Master Kit	1	1959-61	**DK850**
Corvair	Master Kit	1	1960-69	**DK1800**
	Overhaul Kit	1	1960-69	**K18900**
Tempest-Torque	Master Kit	1	1961-62	**DK1800B**
	Master Kit	1	1963	**DK1800E**
	Overhaul Kit	1	1961-62	**K18900A**
	Overhaul Kit	1	1963	**K18900B**
Hydramatic Dual Range	Master Kit	1	1952-62	**DK700**
	Overhaul Kit	1	1952-62	**K7710G**
Jetaway "315"	Master Kit	1	1958-64	**DK400**
	Overhaul Kit	1	1958-64	**K4900F**
Model 10 Slim Jim Roto Hydramatic	Master Kit	1	1961-64	**DK2400**
	Overhaul Kit	1	1961-64	**K24900**
Model 05 F85 Roto Hydramatic	Master Kit	1	1961-63	**DK1400**
	Overhaul Kit	1	1961-63	**K14900**
Ford 2 Speed (Aluminum Case)	Master Kit	1	1959-64	**DK1600**
	Overhaul Kit	1	1959-64	**K16900**
Ford 3 Speed (Cast Iron Case)	Master Kit (Small Case)	1	1951-67	**DK600**
	Master Kit (Medium Case)	1	1955-67	**DK600A**
	Master Kit (Medium Case)	1	1968-71	**DK600MX**
	Master Kit (Large Case)	1	1958-60	**DK600D**
	Overhaul Kit (Small Case)	1	1951-67	**K6900D**
	Overhaul Kit (Medium Case)	1	1955-67	**K6900E**
	Overhaul Kit (Medium Case)	1	1968-71	**K6900MX**
	Overhaul Kit (Large Case)	1	1958-60	**K6900F**
Powerflite	Master Kit	1	1956-61	**DK250A**
	Overhaul Kit	1	1953-61	**K2990A**
Torqueflite (Cast Iron Case)	Master Kit	1	1956-61	**DK260B**
	Overhaul Kit	1	1956-61	**K2990E**
Automatic Drive DG-3 Band Borg Warner	Master Kit	1	1950-65	**DK900**
	Overhaul Kit	1	1950-65	**K9900**
Ultramatic - Packard	Master Kit	1	1954L-56	**DK200A**

TH125 / TH125C (3T40)

FWD 3 Speed

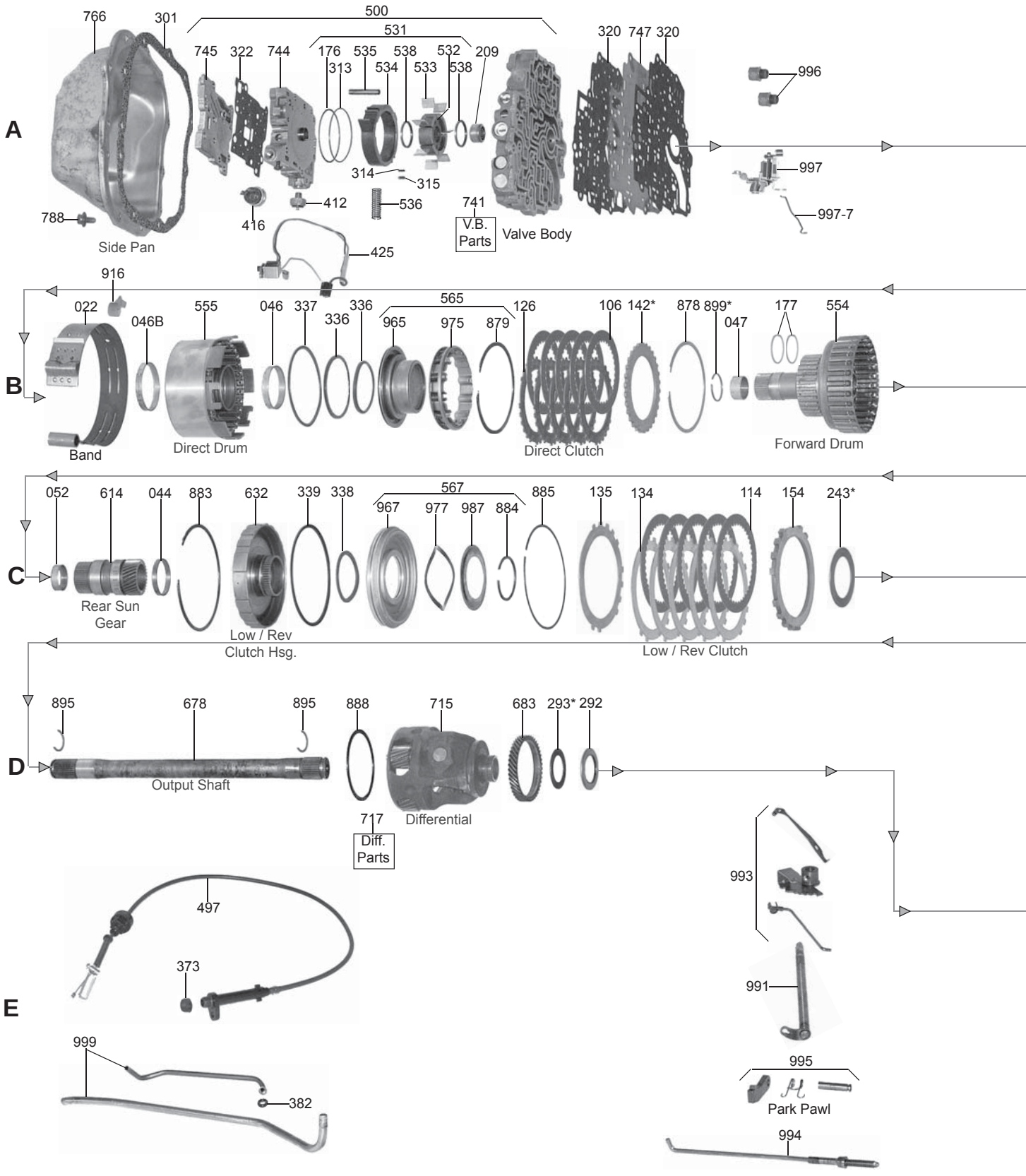

TH125 / TH125C (3T40)

FWD 3 Speed

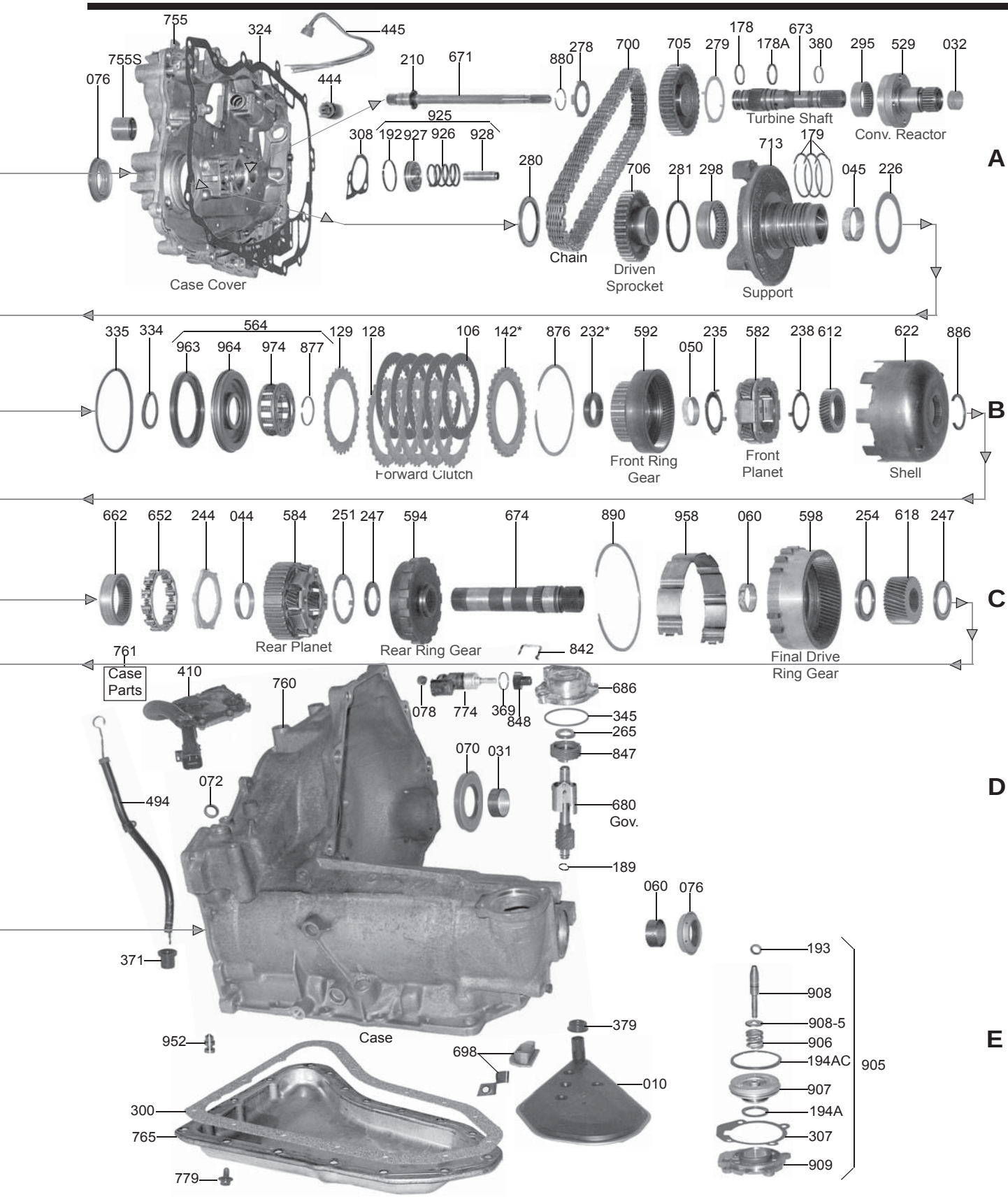

TH125 / TH125C (3T40)

ILL#	PART#	DESCRIPTION	QTY	REF #
		OVERHAUL KIT		
	K75900	Overhaul Kit, [3T40] 1980-85	1	
	K75900A	Overhaul Kit, [3T40] 1986-Up	1	
	K75900C	Overhaul Kit, [125 / 125C] (Combo) 1980-Up	1	
		MASTER L/STEEL KIT		
	DK7500-S	Master L/Steels, [125 / 125C] 1980-E84	1	
	DK7500A-S	Master L/Steels, [125C] L1984-Up	1	
		MASTER W/STEEL KIT		
	DK7500	Master W/Steels, [125 / 125C] 1980-E84	1	
	DK7500A	Master W/Steels, [125C] L1984-Up	1	
		FILTER		
010	75710A	Filter, [125 / 125C] 1980-Up	1	8666665
		FILTER KIT		
011	FK75710A	Filter Kit, [125 / 125C] 1980-Up	1	
		MISC FILTERS		
014	75711	Screen, [125 / 125C] (Governor) (In Case) 1980-Up	1	8660770
015	75712	Filter, [125C] (Aux. Valve Body) 1982-Up	1	8664921
017	75712A	Filter, [125C] (TCC Solenoid) 1982-Up	1	8664811
		BANDS		
022	75700	Band, [125 / 125C] (Flex) (Narrow) 1980-81	1	8631030
022	75700A	Band, [125 / 125C] (Flex) (Wide) 1982-Up	1	8637623
022	75700B	Band, [125C] (Flex) (Wide) (High Energy) 1994-Up (*Retro Fits to 1982)	1	8685538
		BUSHINGS		
	K75901	Bushing Kit, [125 / 125C] 1980-Up	1	
031	75005	Bushing, [125] (Converter Hub) 1980-81	1	8631907
031	75005A	Bushing, [125C] (Converter Hub) 1982-Up	1	8637905
032	65002	Bushing, [125 / 125C] (Converter Reactor) (Stator) 1980-Up	1	8628915
044	75006	Bushing, [125 / 125C] (Center Support) (Low/Reverse Clutch Housing & Rear Planet) 1980-Up	2	8631905
045	75004	Bushing, [125 / 125C] (Driven Sprocket Support) 1980-Up	1	8631900
046	75001	Bushing, [125 / 125C] (Direct Drum) (Rear) 1980-Up	1	8631901
046	75000	Bushing, [125 / 125C] (Direct Drum) (Front) 1980-Up	1	8631902
047	75003	Bushing, [125 / 125C] (Input Shaft) 1980-Up	1	8631903
050	75007	Bushing, [125 / 125C] (Front Ring Gear) (Input Gear) 1980-Up	1	8631904
052	75008	Bushing, [125 / 125C] (Reaction Sun Gear Shaft) 1980-Up	1	8631906
060	75019	Bushing, [125 / 125C] (Case & Final Drive Gear) 1980-Up	2	8631119
		METAL CLAD SEALS		
070	75151A	Seal, [125 / 125C] (Front) (Converter Hub) 1980-Up	1	8664812
072	75511	Seal, [125 / 125C] (Manual Lever) 1980-83	1	8637590
072	84511	Seal, [125C] (Manual Lever) 1984-Up	1	8644709
	75152G	Seal, [125 / 125C] (Axle Stabilizer) 1980-Up	1	Teckpak
076	75152	Seal, [125 / 125C] (Axle) (Both Sides) 1980-Up	2	8631156
078	3991	Seal, [125 / 125C] (Speed-O Shaft) 1980-Up	1	1240382
079	75153	Seal, [125 / 125C] (Pump Shaft) 1980-5/84	1	8637569
	75153A	Bearing W/Seal, [125C] (Pump Shaft) 1984-Up	1	866375

TH125 / TH125C (3T40)

	75125LRB	Axle Stabilizer, [125 / 125C] (Right Axle) (Bearing Type) 1980-Up	1	Teckpak
379	75547	Seal, [125C] (Filter) 1986-Up	1	8652898
		FRICTION CLUTCH		
106	75103	Friction, [125 / 125C] (Forward & Direct Clutch) (.080") 1980-E84	8	8652409
106	75107	Friction, [125 / 125C] (Forward & Direct Clutch) (.069") L1984-Up	8-10	8643741
114	75102	Friction, [125 / 125C] (Low / Reverse Clutch) (.080") 1980-E84	5	8643526
114	75109	Friction, [125C] (Low / Reverse Clutch) (.090") L1984-Up	5	8652028
	K75100	Friction Module, [125 / 125C] 1980-E84	1	8666662
	K75100A	Friction Module, [125C] L1984-Up	1	
		STEEL CLUTCH		
126	75100	Steel, [125 / 125C] (Direct Clutch) (.090") 1980-Up	4	8661026
126	75100X	Steel, [125 / 125C] (Direct Clutch) (.100") (Oversize) 1980-Up	AR	
128	75104	Steel, [125 / 125C] (Forward Clutch) (.076") (Flat) 1980-Up	3-4	8664155
129	75105	Steel, [125 / 125C] (Forward Clutch) (.050") (Waved) 1980-Up	1-2	8657257
134	75101	Steel, [125 / 125C] (Low / Reverse Clutch) (.080") 1980-83	5	8631076
134	75101B	Steel, [125C] (Low / Reverse Clutch) (.088") 1984-Up	4	8652027
135	75101C	Steel, [125 / 125C] (Low / Reverse Clutch) (.070") (Waved) 1980-83	1	8637574
135	75101A	Steel, [125C] (Low / Reverse Clutch) (.078") (Waved) 1984-Up	1-2	8664141
	K75110	Steel Module, [125 / 125C] 1980-E84	1	
	K75110A	Steel Module, [125C] L1984-Up	1	
		CLUTCH PRESSURE PLATES		
142	75116	Pressure Plate, [125 / 125C] (Forward Clutch) (.193") (Flat) 1980-84	1	8631764
142	75121	Pressure Plate, [125C] (Forward & Direct Clutch) (.193") (Stepped) 1984-Up	1-2	8652562
142	75119G	Pressure Plate, [125C] (Forward & Direct Clutch) (.170") (Stepped) 1984-Up	1	
142	75119F	Pressure Plate, [125C] (Forward & Direct Clutch) (.150") (Stepped) 1984-Up	1	24200479
142	75119E	Pressure Plate, [125C] (Forward & Direct Clutch) (.130") (Stepped) 1984-Up	1	8664159
142	75122	Pressure Plate, [125C] (Forward & Direct Clutch) (.170") (Flat) 1984-Up	1	
142	75120	Pressure Plate, [125C] (Forward & Direct Clutch) (.183") (Flat) 1984-Up	1	
142	75119	Pressure Plate, [125C] (Forward & Direct Clutch) (.208") (Flat) 1984-Up	1	
142	75118	Pressure Plate, [125C] (Forward & Direct Clutch) (.235") (Flat) 1984-Up	1	
154	75117	Pressure Plate, [125 / 125C] (Low / Reverse Clutch) 1980-Up	1	8631091
		VALVE BODY KITS		
	K75908	Valve Body Kit, [125 / 125C] (Corrects/Prevents: 3-2 Clunk, Lock-Up Shudder, Long Soft / No 2-3 Shift) 1980-Up	1	Transgo
	K75908S	Valve Body Kit, [125 / 125C] 1980-Up	1	Superior
		OIL SEALING RINGS		
	K75903R	Ring Kit, [125 / 125C] (Metal) 1980-Up	1	
	K75903T	Ring Kit, [125 / 125C] (Teflon) 1980-Up	1	
176	75311	Ring, [125 / 125C] (Pump Slide) (Teflon) 1980-Up	1	8631417
177	75307T	Ring, [125 / 125C] (Input Shaft) (Teflon) 1980-Up	2	8631048
177	75307	Ring, [125 / 125C] (Input Shaft) (Metal) 1980-Up	2	
178	75301	Ring, [125] (Turbine Shaft) (Front & Rear) (Scarf Cut) (Teflon) 1980-81	1-3	8631211
178	75301C	Ring, [125C] (Turbine Shaft) (Front) (Solid) (Teflon) 1982-Up	1	8637170
178	75301D	Ring, [125 / 125C] (Turbine Shaft) (Rear) (Solid) (Teflon) 1980-Up	2	8643058
179	75300	Ring, [125 / 125C] (Driven Sprocket Support) (Metal) 1980-Up	3	
179	75300T	Ring, [125 / 125C] (Driven Sprocket Support) (Teflon) 1980-Up	3	8652535
189	65309J	Ring, [125 / 125C] (Governor Shaft) (Teflon) 1980-Up	1	8632588

TH125 / TH125C (3T40)

192	75302	Ring, [125 / 125C] (1-2 Accumulator Piston) (Metal) 1980-87	1	8631895
192	75302T	Ring, [125 / 125C] (1-2 Accumulator Piston) (Teflon) 1980-87	1	8631895
352	75302R	Lathe Cut Seal, [125C] (1-2 Accumulator Piston) (Rubber) 1988-Up	1	8665807
193	75570	Ring, [125 / 125C] (Band Apply Pin) (Teflon) 1980-Up	1	8631105
194	75306T	Ring, [125] (Intermediate Servo) (1.260"OD) (Inner) (Teflon) 1980-81	1	8631468
194	75312T	Ring, [125 / 125C] (Intermediate Servo) (1.676"OD) (Inner) (Teflon) 1980-Up	1	8631470
194	65310T	Ring, [125 / 125C] (Intermediate Servo Piston) (Outer) (Teflon) 1980-85	1	8631473
194	75313T	Ring, [125 / 125C] (Intermediate Servo) (1.500"OD) (Inner) (Teflon) 1980-Up	1	8631469
538	75925	Ring, [125 / 125C] (Pump Rotor) (Metal) 1980-Up	2	8631279
		WASHERS & BEARINGS		
	K75907A	Washer Kit, [125 / 125C] (Less Selectives) 1980-Up	1	8665957
	K75907B	Bearing Kit, [125 / 125C] 1980-Up	1	
	K75904	Repair Kit, [125 / 125C] (Front Planet) (4-Brass, 4-Batwing, & 8-Steel Round Washers)	1	K75904
	K75905	Repair Kit, [125 / 125C] (Rear Planet) (8-Brass & 8-Steel Washers) 1980-Up	1	K75905
	K75906	Repair Kit, [125] (Final Drive Planet) (8-Brass & 8-Steel Washers) (Small) 1980-83	1	K75906
	K75906A	Repair Kit, [125C] (Final Drive Planet) (8-Brass & 8-Steel Washers) (Large) 1984-Up	1	K75906A
204	S810024R	Washer, [125C] (Final Drive Planet) (.550"ID) (Steel) 1982-Up	1	QWS3030
209	75077	Bearing, [125 / 125C] (Pump Shaft) (Without Seal Type) 1980-E84	1	8631277
209	75153A	Bearing W/Seal, [125C] (Pump Shaft) L1984-Up	1	8666375
210	75475	Spacer, [125 / 125C] (Pump Shaft) 1980-E84	1	
226	75402	Washer, [125 / 125C] (Direct Drum to Support) 1980-Up	1	8631029
232	75473	Washer, [125 / 125C] (Forward Drum to Hub) (1.220"ID) (Plastic) 1980-87	1	8652759
232	75473A	Washer, [125C] (Forward Drum to Hub) (1.270"ID) (Brass) 1987-Up	1	8664762
235	75463	Washer, [125 / 125C] (Front Planet to Hub) 1980-Up	1	8631063
238	75464	Washer, [125 / 125C] (Front Planet to Sungear) 1980-Up	1	8631062
243	75403	Spacer, [125 / 125C] (Low / Reverse Clutch Housing to Inner Race) (1.00mm - 1.10mm) (#1) 1980-Up	1	8631241
243	75403A	Spacer, [125 / 125C] (Low / Reverse Clutch Housing to Inner Race) (1.42mm - 1.52mm) (#2) 1980-Up	1	8631242
243	75403B	Spacer, [125 / 125C] (Low / Reverse Clutch Housing to Inner Race) (1.84mm - 1.94mm) (#3) 1980-Up	1	8631243
243	75403C	Spacer, [125 / 125C] (Low / Reverse Clutch Housing to Inner Race) (2.26mm - 2.36mm) (#4) 1980-Up	1	8631244
243	75403D	Spacer, [125 / 125C] (Low / Reverse Clutch Housing to Inner Race) (2.68mm - 2.78mm) (#5) 1980-Up	1	8631245
243	75403E	Spacer, [125 / 125C] (Low / Reverse Clutch Housing to Inner Race) (3.10mm - 3.20mm) (#6) 1980-Up	1	8631246
244	75414	Washer, [125 / 125C] (Sprag to Rear Planet)	1	8631227
247	65409	Bearing, [125 / 125C] (Rear Sun Gear & Final Drive Sun Gear) (Rear) 1980-Up (2" OD)	2	8628962
247	84454A	Bearing, [125 /125C] (Rear Sun Gear & Final Drive Sun Gear) (Rear) 1980-Up (2-1/8" OD)	1	
251	65415	Washer, [125 / 125C] (Rear Planet to Rear Ring Gear) 1980-Up	1	8628188
254	75406	Bearing, [125 / 125C] (Final Drive Sun Gear) (Front) 1980-Up	1	8631116
265	75435	Washer, [125 / 125C] (Governor to Cover) 1980-Up	1	8631766
265	75435B	Bearing, [125C] (Governor to Cover) 1982-Up	1	8635490
275	75125LRB	Axle Stabilizer, [125 / 125C] (Bearing Type) (OEM) 1980-Up	1	Teckpac
278	75413A	Washer, [125C] (Drive Sprocket to Cover) 1980-Up	1	8652868
279	75412	Washer, [125C] (Drive Sprocket to Support) 1986-Up	1	8652841
280	35400C	Bearing, [125 / 125C] (Case Cover to Driven Sprocket) (# 280) 1980-Up	1	9436851
281	75438	Washer, [125] (Driven Sprocket) (Rear) (.156" Thick) 1980-81	1	8631738
281	75439	Washer, [125C] (Driven Sprocket) (Rear) (.153" Thick) 1982-Up	1	8637227

292	75476	Bearing, [125 / 125C] (Differential to Case) (1.443"ID) (2.250"OD) 1980-Up	1	8631362
293	75417	Spacer, [125 / 125C] (Differential to Case) (1.45mm) 1980-Up (#0)	1	8631420
293	75410-10	Shim Set, [125 / 125C] (Differential to Case) (10 Per Set)	1	Sonnax
293	75417J	Spacer, [125 / 125C] (Differential to Case) (1.55mm) 1980-Up (#1)	1	8631421
293	75417A	Spacer, [125 / 125C] (Differential to Case) (1.65mm) 1980-Up (#2)	1	8631422
293	75417B	Spacer, [125 / 125C] (Differential to Case) (1.75mm) 1980-Up (#3)	1	8631423
293	75417C	Spacer, [125 / 125C] (Differential to Case) (1.85mm) 1980-Up (#4)	1	8631424
293	75417D	Spacer, [125 / 125C] (Differential to Case) (1.95mm) 1980-Up (#5)	1	8631425
293	75417E	Spacer, [125 / 125C] (Differential to Case) (2.05mm) 1980-Up (#6)	1	8631426
293	75417F	Spacer, [125 / 125C] (Differential to Case) (2.15mm) 1980-Up (#7)	1	8631427
293	75417G	Spacer, [125 / 125C] (Differential to Case) (2.25mm) 1980-Up (#8)	1	8631428
293	75417H	Spacer, [125 / 125C] (Differential to Case) (2.35mm) 1980-Up (#9)	1	8631429
295	75086	Bearing, [125 / 125C] (Converter Reactor) (Rear) 1980-Up	1	24214158
298	75090	Caged Needle Bearing, [125 / 125C] (Driven Sprocket Support) 1980-Up	1	8631190
	BS2030	Qwik Shim, [125 / 125C] (Front Planet Replacement Shim) (.030") (Rear) 1980-Up	AR	BS2030
	TS2015	Qwik Shim, [125 / 125C] (Front Planet Replacement Shim) (.015") (Front) 1980-Up	AR	TS2015
	TS2030	Qwik Shim, [125 / 125C] (Front Planet Replacement Shim) (.030") (Front) 1980-Up	AR	TS2030
	BS4015	Qwik Shim, [125 / 125C] (Rear Planet Replacement Shim) (.015") (Rear) 1980-Up	AR	BS4015
	BS4030	Qwik Shim, [125 / 125C] (Rear Planet Replacement Shim) (.030") (Rear) 1980-Up	AR	BS4030
	TS4015	Qwik Shim, [125 / 125C] (Rear Planet Replacement Shim) (.015") (Front) 1980-Up	AR	TS4015
	TS4030	Qwik Shim, [125 / 125C] (Rear Planet Replacement Shim) (.030") (Front) 1980-Up	AR	TS4030
		GASKETS & RUBBER COMPONENTS		
300	75500	Gasket, [125 / 125C] (Bottom Pan) 1980-Up	1	8631338
301	75537	Gasket, [125 / 125C] (Side Pan) (Valve Body Cover) 1980-Up	1	8631340
307	75533	Gasket, [125 / 125C] (Intermediate Servo Cover) 1980-Up	1	8631698
308	75532	Gasket, [125 / 125C] (Case Cover to Case) (Small Center Gasket) 1980-Up	1	8660775
313	75572	O-Ring, [125 / 125C] (Pump Slide) 1980-Up	1	8631504
314	65170	Seal, [125 / 125C] (Pump Slide) (Rubber) 1980-Up	1	8631283
315	65180	Seal, [125 / 125C] (Pump Slide) (Teflon) 1980-Up	1	8631977
320	75539	Gasket, [125 / 125C] (Valve Body) (Upper & Lower) 1980-Up	2	8652065
322	75573	Gasket, [125C] (Auxiliary) (Valve Body) L1984-Up	1	8652841
322	75568	Gasket, [125C] (Auxiliary) (Valve Body) 1982-E84	1	8653947
322	75573A	Gasket, [125C] (Auxiliary) (Valve Body) (Orange Stripe) 1987-Up	1	8666380
322	75573B	Gasket, [125C] (Auxiliary) (Valve Body) (Blue Stripe) 1988-Up	1	8666381
324	75531	Gasket, [125 / 125C] (Case Cover to Case) (Large Outer Gasket) 1980-Up	1	8631756
334	75564	Lip Seal, [125 / 125C] (Forward Clutch) (Inner) 1980-Up	1	8631986
335	75565	Lip Seal, [125 / 125C] (Forward Clutch) (Outer) 1980-86	1	8631013
335	75565A	Lip Seal, [125C] (Forward Clutch) (Outer) 1987-Up (*Will Retro to 82')	1	8631986
336	75562	Lip Seal, [125 / 125C] (Direct Clutch) (Inner) 1980-Up	1	8631403
336	75561	Lip Seal, [125 / 125C] (Direct Clutch) (Center) 1980-Up	1	8631014
337	75560	Lip Seal, [125 / 125C] (Direct Clutch) (Outer) (Long Lip) 1980-Up	1	8631592
338	75566	Lip Seal, [125 / 125C] (Low / Reverse Clutch) (Inner) 1980-86	1	8631074
338	75566A	Lip Seal, [125C] (Low / Reverse Clutch) (Inner) 1987-Up	1	8643548
339	75567	Lip Seal, [125 / 125C] (Low / Reverse Clutch) (Outer) 1980-Up	1	8631547
345	65177	Lathe Cut Seal, [125 / 125C] (Governor Cover) 1980-Up	1	8649382
352	75302R	Lathe Cut Seal, [125C] (1-2 Accumulator Piston) 1988-Up	1	8665807
361	75313D	Lip Seal, [125C] (Intermediate Servo) (Outer) 1986-Up	1	8652446
361	75313C	Lip Seal, [125C] (Intermediate Servo) (.856"ID) (Inner) 1985-96	1	8652445

TH125 / TH125C (3T40)

361	75313B	Lip Seal, [125C] (Intermediate Servo) (1.089"ID) (Inner) 1985-Up	1	8652444
361	75313A	Lip Seal, [125C] (Intermediate Servo) (1.261"ID) (Inner) 1985-Up	1	8652443
361	K75900-4	Lip Seal Set, [125 / 125C] (Intermediate Servo) (*Contains All Sizes) 1980-Up	1	
336	3718	O-Ring, [125 / 125C] (Speed-O Sleeve) (Inner) 1980-Up	1	8622076
371	3292	Boot, [125C] (Filler Tube) 1980-Up	1	1259475
373	13582	Boot, [125C] (Detent) 1980-Up	1	25518260
375	75571	O-Ring, [125 / 125C] (Right Axle Stabilizer) (OE Type) 1980-Up	1	
379	75547	Seal, [125 / 125C] (Filter) (Late) 1986-Up	1	8652898
380	13503A	O-Ring, [125 / 125C] (Turbine Shaft) (Goes Behind Splines) 1982-Up	1	8662686
382	75569	O-Ring, [125 / 125C] (Reverse Oil Pipe to Case) 1980-Up	1	8631331
386	65167	Seal/Cup Plug, [125 / 125C] (Low / Reverse Clutch Housing) 1980-Up	1	8628209
	K75900-2	External Seal Kit, [125 / 125C]	1	
		TECHNICAL MANUALS		
	TM125C	Tech Manual, [125C] 1982-86	1	ATSG
	TM125CS	Tech Manual, [125C] 1987-Up	1	ATSG
		ELECTRICAL COMPONENTS		
410	75947	Switch, [125 / 125C] (Neutral Safety) (Cast # 255) 1980-Up	1	
410	75947A	Switch, [125 / 125C] (Neutral Safety) (Cast # 256) 1980-Up	1	
411	65618	Switch, [125C] (3rd Clutch Pressure) (1-Prong) 1982-Up	1	8683502
412	65618A	Switch, [125C] (3rd Clutch Pressure) (2-Prong) 1982-Up	1	8643710
412	65618	Switch, [125C] (3rd Clutch Pressure) (1-Prong) 1982-Up	1	8683502
412	65618B	Switch, [125C] (3rd Clutch Pressure) (1 Button Prong) 1989-Up	1	8665355
412	65618C	Switch, [125C] (3rd Clutch Pressure) (1-Prong Push-In) 1989-Up	1	8666603
416	75859	Switch, [125C] (Governor Pressure 42-46 PSI) (2-Blade) 1982-Up	1	8643367
416	75859A	Switch, [125C] (Governor Pressure 46-50 PSI) (2-Blade) 1982-Up	1	8643369
416	75859B	Switch, [125C] (Governor Pressure 52 PSI) 1982-Up	1	8643362
416	75988	Switch, [125C] (2nd Clutch Oil Pressure) (3-Blade) 1988-89	1	8664388
416	75859B	Switch, [125C] (Governor Pressure 50-54 PSI) 1982-Up	1	8643362
425	K84856R	Solenoid, [125C] (TCC) (Universal) 1982-Up	1	Rostra
425	K84856U	Solenoid, [125C] (TCC) (Universal) 1982-Up	1	Teckpak
425	75857	Solenoid, [125C] (TCC) (1-Wire to Case Connector) (1-Blade Connector) 1982-Up	1	8689903
425	75858	Solenoid, [125C] (TCC) (2-Wire to Case Connector) (2-Blade Connector) 1982-Up	1	8689901
425	75858D	Solenoid, [125C] (TCC) (4-Wire to Case Connector) (3-Blade, 1-Round) 1982-Up	1	8665016
425	75858E	Solenoid, [125C] (TCC) (4-Wire to Case Connector) (4-Blade Connector) 1982-Up	1	8689902
425	75856	Solenoid, [125C] (TCC) (3-Wire to Case Connector) (2-Blade Connector) 1982-Up	1	8665377
425	75856A	Solenoid, [125C] (TCC) (3-Wire to Case Connector) (4-Blade Connector) 1982-Up	1	8652376
437	65618C	Switch, [125C] (Temperature Control) 1989-Up (1-Prong) (Push-in)	1	8666603
441	75956	Element Plate Kit, [125 / 125C] (Thermostatic Element) (Goes on Channel Plate) 1980-Up	1	8631956
444	84983A	Connector, [125C] (Case) (Round 5-Wire) 1983-Up	1	8665015
444	77983	Connector, [125C] (Case) (3-Prong) 1982-Up	1	8634383
444	84983	Connector, [125C] (Case) (4-Prong Square) 1989-Up	1	8662395
444	84983B	Connector, [125C] (Case) (4-Prong Round) 1989-Up	1	
445	75994	Repair Kit, [125C] (External Wire Harness) (Square 4-Prong) (Plugs Into Connector) 1989-Up	1	12085506
445	75994A	Repair Kit, [125C] (External Wire Harness) (Square 5-Prong) (Plugs Into Connector) 1983-Up	1	
	LU-1	Lock-Up Delay Module, (*For Vehicle With Speed Sensor) 1982-Up	1	LU1
	LU1-4226	LU1 Sensor, (GM FWD With Extension Cable)	1	LU1-4226

TH125 / TH125C (3T40)

		MISC. COMPONENTS		
	30126	Union, (5/16")	1	
480	65764	Capsule W/Check Ball, [125 / 125C] (Forward Drum) 1980-Up	1	8633748
482	65764A	Capsule W/Check Ball, [125 / 125C] (Direct Drum) 1980-Up	1	8628732
483	75796	Cup Plug, [125 / 125C] (Valve Body) (Orifice) (Between Solenoid & Auxiliary Valve Body) 82-Up	1	8624826
484	75934	Cup Plug, [125 / 125C] (Servo) (Orifice) (in Case) 1980-Up	1	8611710
487	30130	E-Clips, (GM)	1	
497	K65553	Detent Cable, [125] (2.8L) & [125 / 125C] (3.1L) (Overall Length 58") 1980-85	1	Teckpak
497	K65940U	Detent Cable, [125 / 125C] (Universal) 1980-Up	1	Teckpak
497	K77909U	Repair End, [125 / 125C] (Detent Cable) 1980-Up	1	Teckpak
		HARD PARTS		
500	75916	Pump, [125] (With Valve Body) (Without Tube) 1980-81	1	8653908
500	75917	Pump, [125] (With Valve Body) (With Tube) 1980-81	1	8653909
500	75918	Pump, [125C] (With Valve Body) 1982-84	1	
500	75918A	Pump, [125C] (With Valve Body) (1-Solenoid & 1-Switch, Square 2-Wire Connector at End of Solenoid Wire Harness) 1985-Up	1	
500	75918B	Pump, [125C] (With Valve Body) (1-Solenoid & 2-Switch, Round 4-Wire Connector at End of Solenoid Wire Harness) 1987-Up	1	
500	75918BA	Pump, [125C] (With Valve Body) (1-Solenoid & 2-Switch) 1987-Up (With Screw-in 3rd Pressure Switch) (Round 4-Wire Connector at End of Solenoid Wire Harness)	1	24200514
500	75918BB	Pump, [125C] (With Valve Body) (1-Solenoid & 2-Switch, Square 3-Wire Connector at End of Solenoid Wire Harness) 1987-Up	1	
500	75918BC	Pump, [125C] (With Valve Body) (2-Solenoid & 2-Switches) 1987-Up (With Slide-in 3rd Pressure Switch)	1	
		PUMP COMPONENTS		
209	75077	Bearing, [125 / 125C] (Pump Shaft) (Without Seal Type) 1980-E84	1	8631277
209	75153A	Bearing W/Seal, [125 / 125C] (Pump Shaft) L1984-Up	1	8666375
314	65170	Seal, [125 / 125C] (Pump Slide) (Rubber) 1980-Up	1	8631283
315	65180	Seal, [125 / 125C] (Pump Slide) (Teflon) 1980-Up	1	8631877
541	75786	Sleeve, [125 / 125C] (Pump Cover) (Tin) 1980-Up	1	
		HARD PARTS (Continued)		
529	75840	Converter Reactor, [125] 1980-81	1	8637415
529	75841	Converter Reactor, [125C] 1982-Up	1	8644036
531	K75979G	Rotor Kit, [125] (20-Spline Rotor) 1982-85	1	
531	K75979N	Rotor Kit, [125C] (15-Spline Rotor) L1985-Up	1	
531	K75875	Rotor Kit Conversion, [125] (20-Spline to 15-Spline) (Contains; Pump Shaft, 15-Spline Rotor & Vanes) (Converts 20-Spline to 15-Spline Rotor) 1980-82	1	
532	75978	Rotor, [125] (20-Spline) (.708") 1980-81	1	8631497
532	75978A	Rotor, [125C] (15-Spline) (.708") 1982-Up	1	8652247
533	75926	Vane, [125 / 125C] 1980-Up	7	8631280
533	K75910	Vane & Ring Kit, [125 / 125C] 1980-Up	1	8634904
534	75979C	Pump Slide, [125 / 125C] 1980-Up	1	8631802
535	75797	Pivot Pin, [125 / 125C] (Pump Slide) 1980-Up	1	8628273
536	75723	Spring, [125 / 125C] (Pump Slide) 1980-Up	1	
538	75925	Ring, [125 / 125C] (Pump Rotor to Vanes) 1980-Up	2	8631279
541	75786	Sleeve, [125 / 125C] (Pump Cover) (Tin) 1980-Up	1	8631288
547	75773	Apply Ring, [125 / 125C] (Forward Clutch) 1980-Up	1	8631376
549	75775	Apply Ring, [125 / 125C] (Reverse Clutch) 1980-Up	1	8643490
554	75733	Drum, [125] (Forward Clutch) (*Uses Washer # 232 With 1.220"ID) 1980-81	1	8653977

TH125 / TH125C (3T40)

554	75734	Drum, [125 / 125C] (Forward Clutch) (*Uses Washer # 232 With 1.220”ID) 1981-84	1	
554	75735	Drum, [125C] (Forward Clutch) (*Uses Washer # 232 With 1.220”ID) 1985-86	1	8664982
554	75735A	Drum, [125C] (Forward Clutch) (*Uses Washer # 232 With 1.270”ID) 1987-Up	1	9664982
555	75716	Drum, [125] (Direct Clutch) (Narrow) 1980-81	1	
555	75717	Drum, [125 / 125C] (Direct Clutch) (Wide) 1980-84	1	8653983
555	75717A	Drum, [125C] (Direct Clutch) (Wide) (4 Clutch) 1985-Up	1	8653971
555	75717B	Drum, [125C] (Direct Clutch) (5 Clutch) 1985-Up	1	
564	K75760	Piston Kit, [125 / 125C] (Forward Drum) 1980-Up	1	
565	K75763	Piston Kit, [125 / 125C] (Direct Drum) 1980-Up	1	
567	K75769	Piston Kit, [125 / 125C] (Low / Reverse Clutch) (Center Support) (Steel Piston) 1980-92	1	8653916
567	K75769A	Piston Kit, [125C] (Low / Reverse Clutch) (Center Support) (Aluminum Piston) 1993-Up	1	
582	75747	Planet, [125 / 125C] (Front) (Input) 1980-Up	1	8686142
584	75731	Planet, [125 / 125C] (Rear) (Reaction) 1980-Up	1	8660048
592	75713	Ring Gear, [125 / 125C] (Front Planet) 1980-Up	1	8631049
594	75730	Ring Gear, [125 / 125C] (Rear Planet) 1980-Up	1	8631097
598	75883	Ring Gear, [125 / 125C] (Differential) 1980-Up	1	8631117
612	75748	Sun Gear, [125 / 125C] (Front Planet) 1980-Up	1	8631061
614	75750	Sun Gear, [125 / 125C] (Rear Planet) 1980-Up	1	8631094
618	75884	Sun Gear, [125 / 125C] (Differential) (38 Teeth) 1980-Up	1	8658040
618	75884A	Sun Gear, [125 / 125C] (Differential) (34 Teeth) 1980-Up	1	24209169
618	75884B	Sun Gear, [125 / 125C] (Differential) (30 Teeth) 1980-Up	1	8644114
622	75749	Shell, [125] (Input) 1980-E81	1	8637415
622	75749A	Shell, [125 / 125C] (Input) (With Scoops & Roll Pins) L1981-Up	1	8643131
622	75749B	Shell, [125 / 125C] (Input) (With Scoops, No Roll Pins) L1981-86	1	
632	75751	Center Support, [125] (Low / Reverse Clutch Housing) 1980-81	1	
632	75751A	Center Support, [125C] (Low / Reverse Clutch Housing) 1982-84	1	8643007
632	75751C	Center Support, [125C] (Low / Reverse Clutch Housing) 1985-Up (*Retros to ‘80)	1	8666656
652	75727	Sprag, [125 / 125C] (Low Roller Clutch) 1980-Up	1	8652403
662	75752	Inner Race, [125 /125C] (Low Roller Clutch) 1980-Up	1	8641093
671	75874	Shaft, [125] (Pump) (20-Spline) 1980-81	1	8631869
671	75875	Shaft, [125] (Pump) (Conversion) (15-Spline) 1980-81	1	
671	75876	Shaft, [125C] (Pump) (15-Spline) (With Thick Steel Race) 1982-E84	1	8637777
671	75877	Shaft, [125C] (Pump) (15-Spline) (With Thin Steel Race) L1984-Up	1	8652125
671	75877A	Shaft, [125C] (Pump) (15-Spline) (With Solid Steel Collar) (*Replaces Stamped) L1984-Up	1	Sonnax
673	75830	Shaft, [125] (Turbine) 1980-81 (3-Ring Grooves)	1	8631207
673	75831	Shaft, [125C] (Turbine) 1982-Up (4-Ring Grooves)	1	8637166
674	75881	Shaft, [125 / 125C] (Intermediate Sun Gear) (Final Drive) 1980-Up	1	8631098
678	75737	Shaft, [125 / 125C] (Output) 1980-Up	1	8631640
680	K75410	Governor, [125] 1980-81	1	8631931
680	K75410C	Governor, [125C] (Electronic) (13 Tooth Pick-Up) 1982-Up	1	8652927
680	K75410D	Governor, [125C] (Electronic) (14 Tooth Pick-Up) 1982-Up	1	8637949
680	K75410A	Governor, [125C] (Electronic) (8 Tooth Pick-Up) 1982-Up	1	
680	K75410E	Governor, [125C] (Electronic) (15 Tooth Pick-Up) 1982-Up	1	
680	K75410B	Governor, [125C] (Electronic) (11 Tooth Pick-Up) 1982-Up	1	
683	75885	Gear, [125 / 125C] (Governor Drive) 1980-84 (Steel Gear)	1	8631571
686	75937	Cover, [125 / 125C] (Governor) (Washer Type) 1980-82	1	8632985
686	75937A	Cover, [125C] (Governor) (Bearing Type) 1982-Up	1	8643984
686	75937B	Cover, [125C] (Governor) (Bearing Type) (With Needles) 1982-Up	1	8652920

TH125 / TH125C (3T40)

686	75937C	Cover, [125C] (Governor) (Electronic Type) 1982-Up	1	
698	K75835	Oil Weir, [125] (With Bracket) 1980-81	1	
700	75820	Chain, [125 / 125C] (Drive) (Narrow) 1980-83	1	8637520
700	84885	Chain, [125C] (Drive) (Wide) (Round Pins) 1984-Up	1	8652408
701	75822	Chain Snubber, [125 / 125C] 1980-Up	1	
705	75817	Sprocket, [125 / 125C] (Drive) (33 Narrow Teeth) 1980-83	1	8631197
705	75817A	Sprocket, [125 / 125C] (Drive) (38 Narrow Teeth) 1980-83	1	8637172
705	75817AW	Sprocket, [125C] (Drive) (38 Wide Teeth) 1984-Up	1	8643212
705	75817W	Sprocket, [125C] (Drive) (33 Wide Teeth) 1984-Up	1	8643209
705	75818	Sprocket, [125 / 125C] (Drive) (35 Narrow Teeth) 1980-83	1	8637118
705	75818W	Sprocket, [125C] (Drive) (35 Wide Teeth) 1984-Up	1	8643210
705	75819	Sprocket, [125 / 125C] (Drive) (37 Narrow Teeth) 1980-83	1	8631918
705	75819W	Sprocket, [125C] (Drive) (37 Wide Teeth) 1984-Up	1	8643211
706	75812	Sprocket, [125 / 125C] (Driven) (35 Narrow Teeth) (.655" Thick) 1980-83	1	8643446
706	75812W	Sprocket, [125C] (Driven) (35 Wide Teeth) (.780" Thick) 1984-Up	1	8643223
706	75814	Sprocket, [125 / 125C] (Driven) (37 Narrow Teeth) (.655" Thick) 1980-83	1	8643447
706	75814W	Sprocket, [125C] (Driven) (37 Wide Teeth) (.780" Thick) 1984-Up	1	8643224
706	75815	Sprocket, [125 / 125C] (Driven) (32 Narrow Teeth) (.655" Thick) 1980-83	1	8643444
706	75815W	Sprocket, [125C] (Driven) (32 Wide Teeth) (.780" Thick) 1984-Up	1	8643221
706	75816	Sprocket, [125 / 125C] (Driven) (33 Narrow Teeth) (.655" Thick) 1980-83	1	8643445
706	75816W	Sprocket, [125C] (Driven) (33 Wide Teeth) (.780" Thick) 1984-Up	1	8643222
713	75870	Support, [125] (Driven Sprocket) 1980-81	1	8631954
713	75871	Support, [125C] (Driven Sprocket) 1982-84	1	8637224
713	75871A	Support, [125C] (Driven Sprocket) 1985-Up	1	8652564
715	75890	Differential, [125 / 125C] (38 Teeth) (.705"OD Chrome Cross Pin) (2"OD Bearing #247) (2.84 Ratio)	1	8662923
715	75890A	Differential, [125 / 125C] (38 Teeth) (.705"OD Chrome Cross Pin) (2-1/8"OD Bearing #247) (2.84 Ratio)	1	
715	75890D	Differential, [125 / 125C] (38 Teeth) (.705"OD Black Cross Pin) (2.84 Ratio)	1	
715	75890C	Differential, [125 / 125C] (34 Teeth) (.705"OD Chrome Cross Pin) (3.06 Ratio)	1	8661905
715	75890B	Differential, [125 / 125C] (30 Teeth) (.705"OD Black Cross Pin) (3.33 Ratio)	1	8662922
		VALVE BODIES (REBUILT)		
740	GM-4601	(3-Prongs Governor) (Pressure) (Round Plug) 1988-96	1	
740	GM-4602	(3-Prongs Governor) (Pressure) (Square Plug) 1988-96	1	
740	GM-4603	(2-Prongs Governor on 2nd Clutch Pressure Switch) 1982-Up	1	
740	GM-4604	(2-Prongs on 3rd Clutch Pressure Switch) (No Governor Pressure Switch) 1982-Up	1	
740	GM-4605	(1-Prong With Ground) 1982-85	1	
740	GM-4606	(2-Prongs on 3rd Clutch Pressure) (No Governor Pressure Switch) 1992-Up	1	
		VALVE BODY COMPONENTS		
741	75935	Spring, [125C] (Lock-Up) 1982-Up	1	8637888
647	75796	Plug, [125C] (Aux) (Valve Body) 1982-Up	1	8623796
741	75987	Valve, [125] (Manual) 1980-81	1	8666494
741	75987A	Valve, [125C] (Manual) 1982-Up	1	
	77872-02K	Universal TV Cable Repair, [125C]	1	Sonnax
474	75918-01K	Boost Valve Kit, [125C] (TV & Reverse) 1982-Up	1	Sonnax
	75921-01K	Pin Kit, [125C] (1-2 Accumulator Piston)	1	Sonnax
	75921-03K	Pin Kit, [125C] (Oversized) (1-2 Accumulator Piston) (Includes: 10-Pins & Reamer)	1	Sonnax

TH125 / TH125C (3T40)

	75921-02K	Pin Kit, [125C] (Oversized) (1-2 Accumulator Piston) (Includes: 4-Pins & No Reamer)	1	Sonnax
741	75909	Valve, [125 / 125C] (2-3 Shift) 1980-Up	1	
741	K75911	Valve Kit, [125 / 125C] (2-3 Shift) (With Spring) 1980-Up	1	
741	75966	Pin, [125 / 125C] (TV Boost) (Hardened) 1980-Up	1	
		HARD PARTS (Continued)		
744	75899	Aux. Valve Body, [125C] 1982-Up	1	
744	75899B	Aux. Valve Body, [125C] 1990-Up	1	
745	75996	Cover, [125C] (Valve Body) 1982-84	1	
745	75997	Cover, [125C] (Valve Body) 1985-Up	1	8643645
745	75995	Cover, [125] (Valve Body) 1980-81	1	8631938
747	75599	Plate, [125 / 125C] (Valve Body Separator) 1980-Up	1	8643044
755	75985	Case Cover, [125] 1980-E81	1	8631996
755	75985A	Case Cover, [125C] (With Flat Raised Boss) (1-Bolt Cable) (The Flat Boss is 2" to the Right of the Axle Seal With 1-Threaded Hole) 1982-Up	1	8631997
755	75985B	Case Cover, [125C] (With Flat Raised Boss) (2-Bolt Cable) (The Flat Boss is 2" to the Right of the Axle Seal With 1-Threaded Hole) 1982-Up	1	
755	75985C	Case Cover, [125C] (With Angled Raised Boss) (1-Bolt Cable) (The Angled Boss is 2" to the Right of the Axle Seal With 1-Threades Hole) 1982-Up	1	
755	75985D	Case Cover, [125C] (With Angled Raised Boss) (2-Bolt Cable) (The Angled Boss is 2" to the Right of the Axle Seal With 1-Threaded Hole) 1982-Up	1	
755	75785	Sleeve, [125 / 125C] (Case Cover) (Channel Plate) 1980-Up	1	
760	75701	Case, [125] (Flat Top Bell) 1980-81	1	8631974
760	75703	Case, [125C] (Flat Top Bell) (Starter at 4:00) (No Neutral Safety Mounting Holes) 1982-Up	1	8653917
760	75703B	Case, [125C] (Flat Top Bell) (Starter at 4:00) (With Neutral Safety Mounting Holes) 1982-Up	1	
760	75702	Case, [125C] (Round Bell) (Starter at 10:00) (No Neutral Safety Mounting Holes) 1984-Up	1	8631975
760	75702A	Case, [125C] (Round Bell) (Starter at 10:00) (With Neutral Safety Mounting Holes) 1984-Up	1	8653918
760	75702B	Case, [125C] (Round Bell) (Starter at 1:00) (No Neutral Safety Mounting Holes) 1984-Up	1	
760	75702C	Case, [125C] (Round Bell) (Starter at 1:00) (With Neutral Safety Mounting Holes) 1984-Up	1	
		CASE COMPONENTS		
	75125SB	Axle Stabilizer, [125 / 125C] (Right Axle) (Bushing Type) 1980-Up	1	
275	75125LRB	Axle Stabilizer, [125 / 125C] (Right Axle) (Bearing Type) 1980-Up	1	Teckpak
698	K75912	Oil Weir, [125] (With Bracket) 1980-82	1	
701	75822	Chain Snubber, [125 / 125C] 1980-Up	1	
916	75611	Anchor Plug, [125 / 125C] (Band) (Plactic) 1980-Up	1	8637640
		HARD PARTS (Continued)		
765	75801	Pan, [125 / 125C] (Bottom) 1980-83	1	8653942
765	75801A	Pan, [125C] (Bottom) 1984-Up	1	8643574
766	75995	Pan, [125] (Side) 1980-81	1	
766	75996	Pan, [125 / 125C] (Side) 1982-83	1	8653943
766	75997	Pan, [125C] (Side) 1984-Up	1	8643575
774	84922	Housing, [125 / 125C] (Driven Speed-O Gear) (1" Aluminum Bullitt) 1980-Up	1	25519848
775	B79	Bolt, [125 / 125C] (Converter) (Metric) 1980-Up	3	
842	75741	Clip, [125 / 125C] (Holds Speed-O Housing to Cover) 1980-Up	1	3708148
847	75896	Gear, [125 / 125C] (Speed-O Drive) (10 Teeth) (Green) 1980-Up	1	
847	75897	Gear, [125 / 125C] (Speed-O Drive) (9 Teeth) 1980-Up	1	
847	65896	Gear, [125 / 125C] (Speed-O Drive) (12 Teeth) 1980-Up	1	
847	75990	Reluctor, [125C] (8 Teeth)	1	8666642
847	75990A	Reluctor, [125C] (11 Teeth)	1	8666643

847	75900B	Reluctor, [125C] (14 Teeth)	1	8666644
848	75998B	Gear, [125 / 125C] (Speed-O Driven) (29 Teeth) (Green) 1980-Up	1	403999
848	75998C	Gear, [125 / 125C] (Speed-O Driven) (30 Teeth) (Blue) 1980-Up	1	561035
848	75998D	Gear, [125 / 125C] (Speed-O Driven) (31 Teeth) (White) 1980-Up	1	403417
848	75998E	Gear, [125 / 125C] (Speed-O Driven) (27 Teeth) (Black)	1	410731
848	75988A	Gear, [125 / 125C] (Speed-O Driven) (28 Teeth) (Yellow)	1	
	K75928A	Snap Ring Kit, [125 / 125C] 1980-Up	1	48680
876	75551	Snap Ring, [125 / 125C] (Holds Forward & Direct Clutch Pressure Plate in Drum) 1980-Up	1-3	
877	75554	Snap Ring, [125 / 125C] (Holds Forward Clutch Spring Retainer in Drum) 1980-Up	1	8631948
878	75551	Snap Ring, [125 / 125C] (Holds Direct Clutch Pressure Plate in Drum) 1980-Up	1	
879	75551	Snap Ring, [125 / 125C] (Holds Direct Clutch Retainer in Drum) 1980-Up	1	8652055
880	75557	Snap Ring, [125 / 125C] (Holds Drive Sprocket to Turbine Shaft) 1980-Up	1	8631210
883	75552	Snap Ring, [125 / 125C] (Holds Low / Reverse Clutch Housing in Case) 1980-Up	1	831078
884	75555	Snap Ring, [125 / 125C] (Holds Low / Reverse Clutch Retainer In) 1980-Up	1	
884	75554	Snap Ring, [125 / 125C] (Holds Low / Reverse Clutch Housing Retainer in) (Spiral) 1993-Up	1	8631948
885	75553	Snap Ring, [125 / 125C] (Holds Low / Reverse Clutches in Case) 1980-Up	1	8631549
886	75602	Snap Ring, [125 / 125C] (Holds Input Shell to Sun Gear) (.091") 1980-Up	1	8631602
886	75603	Snap Ring, [125 / 125C] (Holds Input Shell to Sun Gear) (.098") 1980-Up	1	8631603
886	75604	Snap Ring, [125 / 125C] (Holds Input Shell to Sun Gear) (.106") 1980-Up	1	8631604
886	75605	Snap Ring, [125 / 125C] (Holds Input Shell to Sun Gear) (.111") 1980-Up	1	8631605
886	75606	Snap Ring, [125 / 125C] (Holds Input Shell to Sun Gear) (.118") 1980-Up	1	8631606
886	75607	Snap Ring, [125 / 125C] (Holds Input Shell to Sun Gear) (.125") 1980-Up	1	8631607
886	75608	Snap Ring, [125 / 125C] (Holds Input Shell to Sun Gear) (.132") 1980-Up	1	8631608
886	75609	Snap Ring, [125 / 125C] (Holds Input Shell to Sun Gear) (.138") 1980-Up	1	8631609
887	75554	Snap Ring, [125 / 125C] (Holds Output Shaft to Differential) 1980-Up	2	8631948
888	84954	Snap Ring, [125 / 125C] (Holds Pinion Pins to Differential Housing) (Spiral)	1	11501326
890	75552	Snap Ring, [125 / 125C] (Holds Final Drive Ring Gear in Case) 1980-Up	1	
895	75556	Snap Ring, [125 / 125C] (Output Shaft to Differential) (Flat) 1983-Up	1	
899	75458	Snap Ring, [125 / 125C] (Forward Drum to Driven Sprocket Support) (1.83 - 1.93mm) 1980-Up	1	8631258
899	75459	Snap Ring, [125 / 125C] (Forward Drum to Driven Sprocket Support) (2.03 - 2.13mm) 1980-Up	1	8631259
899	75460	Snap Ring, [125 /125C] (Forward Drum to Driven Sprocket Support) (2.23 - 2.33mm) 1980-Up	1	8631260
899	75461	Snap Ring, [125 / 125C] (Forward Drum to Driven Sprocket Support) (2.43 - 2.53mm) 1980-Up	1	8631261
899	75462	Snap Ring, [125 / 125C] (Forward Drum to Driven Sprocket Support) (2.63 - 2.73mm) 1980-Up	1	8631262
905	K75802	Servo Assembly, [125 / 125C] (Intermediate) (1.260"ID) 1980-Up	1	
905	K75803	Servo Assembly, [125 / 125C] (Intermediate) (1.495"ID) 1980-Up	1	8652901
905	K75804	Servo Assembly, [125 / 125C] (Intermediate) (1.672"ID) 1980-Up	1	
906	75894	Spring, [125 / 125C] (Intermediate Servo Cushion) 1980-Up	1	8631633
906	75894A	Spring, [125 / 125C] (Intermediate Servo Cushion) (Red) 1980-Up	1	8631463
907	75922C	Piston, [125 / 125C] (Intermediate Servo) 1980-Up	1	8652900
908	75850	Pin, [125 / 125C] (Intermediate Servo) (No Groove) 1980-Up	1	8631923
908	75851	Pin, [125 / 125C] (Intermediate Servo) (1-Groove) 1980-Up	1	8631924
908	75852	Pin, [125 / 125C] (Intermediate Servo) (2-Grooves) 1980-Up	1	8631925
909	75802	Cover, [125 / 125C] (Intermediate Servo) (1.260"ID) 1980-Up	1	8631702
909	75803	Cover, [125 / 125C] (Intermediate Servo) (1.495"ID) 1980-Up	1	8631703
909	75804	Cover, [125 / 125C] (Intermediate Servo) (1.672"ID) 1980-Up	1	8631704
916	75611	Anchor Plug, [125 / 125C] (Band) 1980-Up	1	
925	K75921	Accumulator Assembly, [125C] (1-2 Accumulator) 1980-Up	1	

TH125 / TH125C (3T40)

926	75893	Spring, [125 / 125C] (1-2 Accumulator) 1980-85 (Purple) 1980-Up	1	8631168
926	75893A	Spring, [125C] (1-2 Accumulator) 1985-Up (Purple) 1980-Up	1	8652501
927	75921	Piston, [125 / 125C] (1-2 Accumulator) 1980-Up	1	8665920
928	75923	Pin, [125 / 125C] (1-2 Accumulator) 1980-Up	1	8665840
952	75909	Valve, [125 / 125C] (2-3 Shift) (Accumulator) 1980-Up	1	8643964
952	75909	Valve & Spring Kit, [125 / 125C] (2-3 Shift Fix) (Accumulator) 1980-Up	1	
958	75882A	Spacer, [125 / 125C] (Final Drive) (Tin) 1980-Up	1	8652022
963	TBA	Insert, [125 / 125C] (Under The Forward Piston) 1980-Up	1	8643606
964	75760	Piston, [125 / 125C] (Forward Clutch) 1980-Up	1	8637650
965	75763	Piston, [125 / 125C] (Direct Clutch) 1980-Up	1	8631009
967	75769	Piston W/Insert, [125 / 125C] (Low / Reverse Clutch) (Steel) 1980-92	1	
967	75769A	Piston W/Insert, [125C] (Low / Reverse Clutch) (Aluminum) 1993-Up	1	
974	79895	Spring, [125 / 125C] (Forward Clutch Return) 1980-Up	1	
975	75770	Spring W/Retainer, [125 / 125C] (Direct Clutch) 1980-Up	1	8664636
977	65707	Spring, [125 / 125C] (Low / Reverse Clutch Return) (Waved) 1980-92	1	8628222
977	65707A	Spring, [125 / 125C] (Low / Reverse Clutch Return) (Diaphragm) (Update) 1993-Up	1	8683616
987	75888	Retainer, [125 / 125C] (Low / Reverse Clutch) 1980-92	1	8631075
991	75675	Shaft, [125] (Manual) 1980-81	1	8637970
993	K75676	Linkage Assembly, [125 / 125C] (Internal) 1980-Up	1	8682973
994	75677	Park Rod Actuator, [125 / 125C] 1980-Up	1	
995	K75678	Park Pawl Assembly, [125 / 125C] 1980-Up	1	
996	75849	Fittings, [125 / 125C] (Cooler Line) 1980-Up	2	
997	75992	T.V. Bracket, [125 / 125C] 1980-Up	1	8631685
997	75992A	Wire Link, [125 / 125C] (Linkage Assembly to T.V. Cable) 1980-Up	1	
999	K75679	Oil Tube Set, [125 / 125C] 1980-Up	1	8664493

NOTES

TH180/TH180C (3L30)

RWD 3 Speed

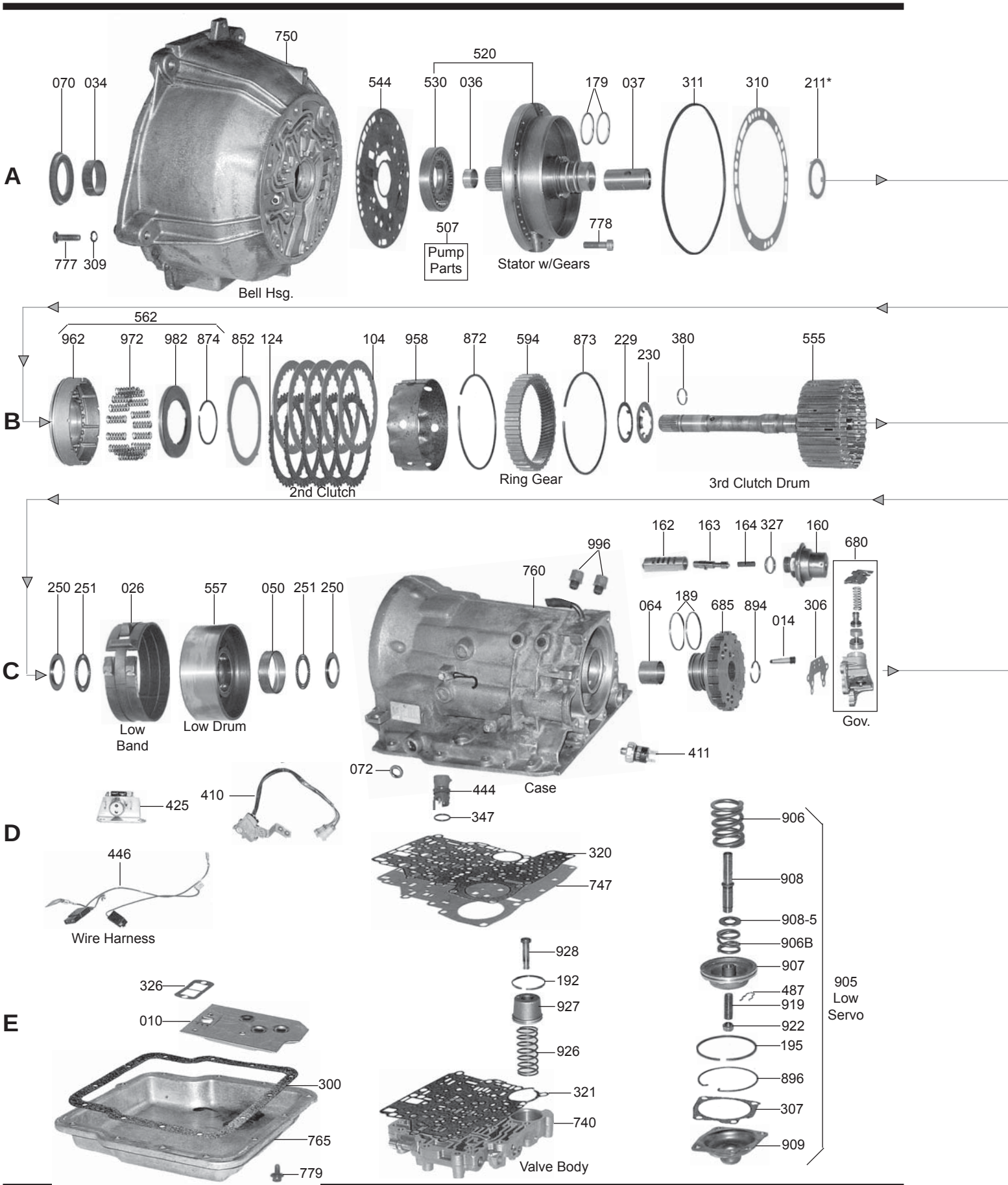

TH180/TH180C (3L30)

RWD 3 Speed

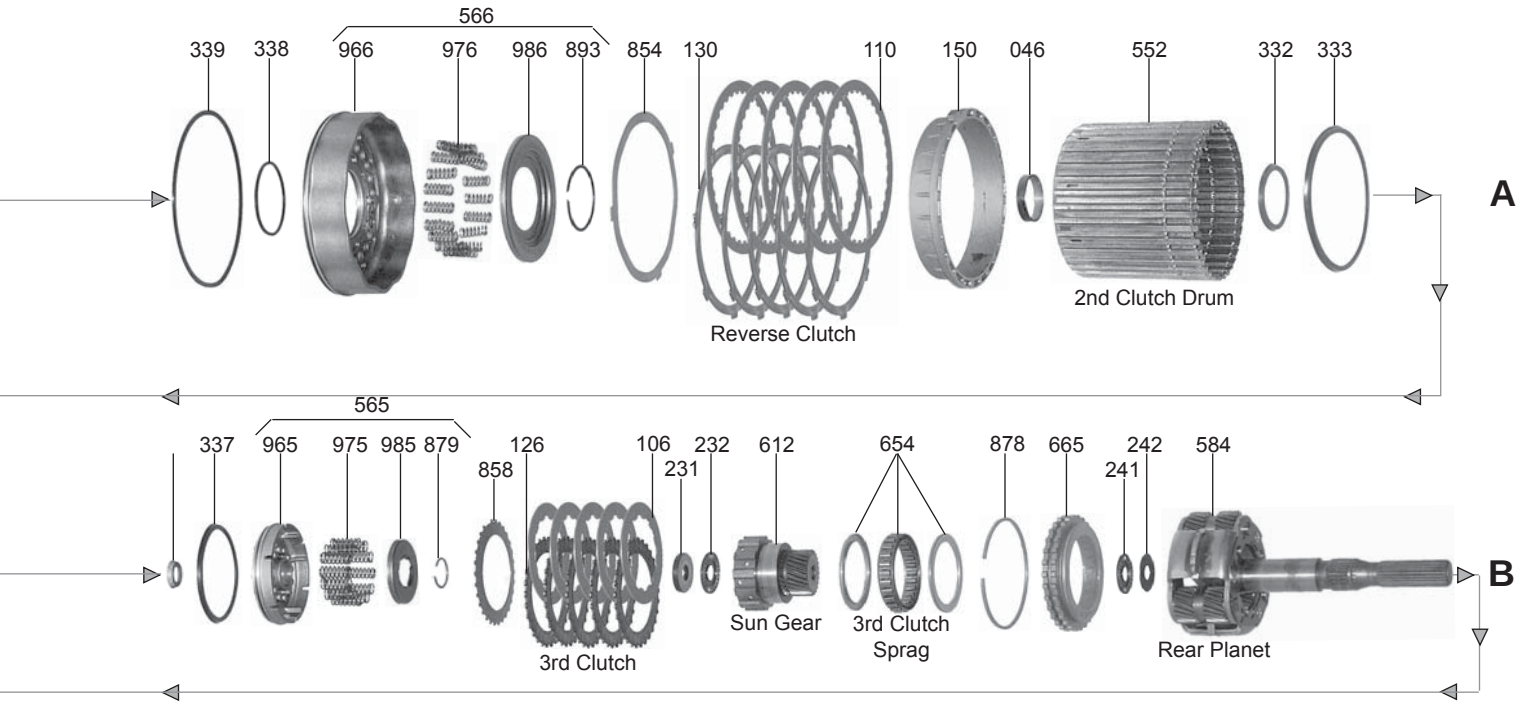

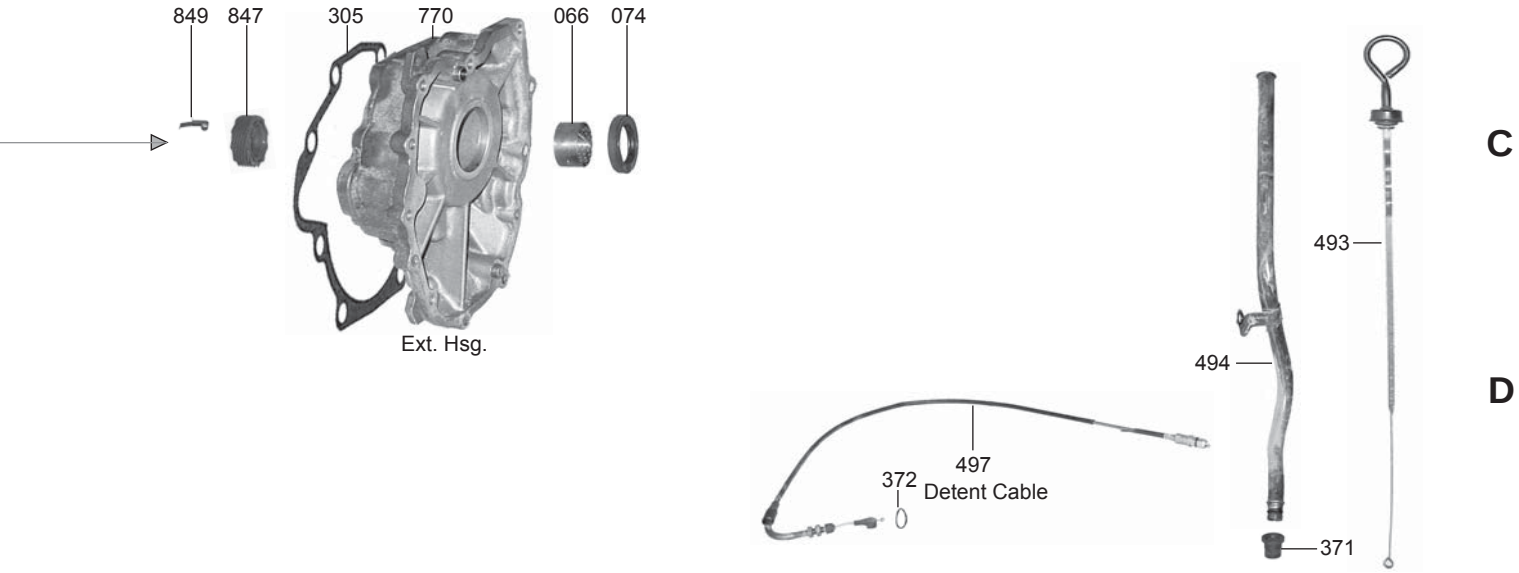

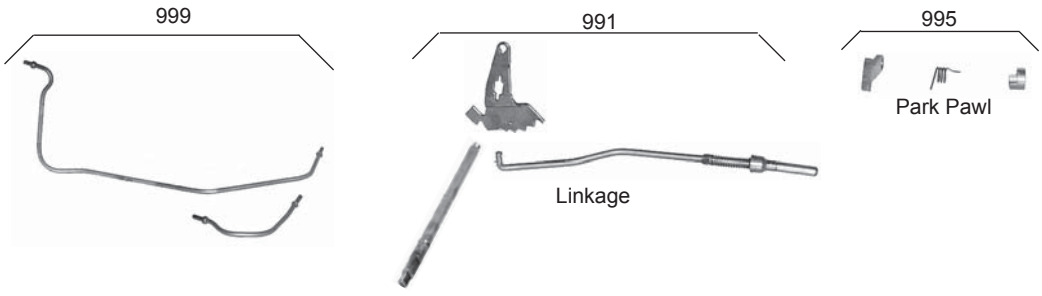

TH180/TH180C (4L30E)

RWD 4 Speed

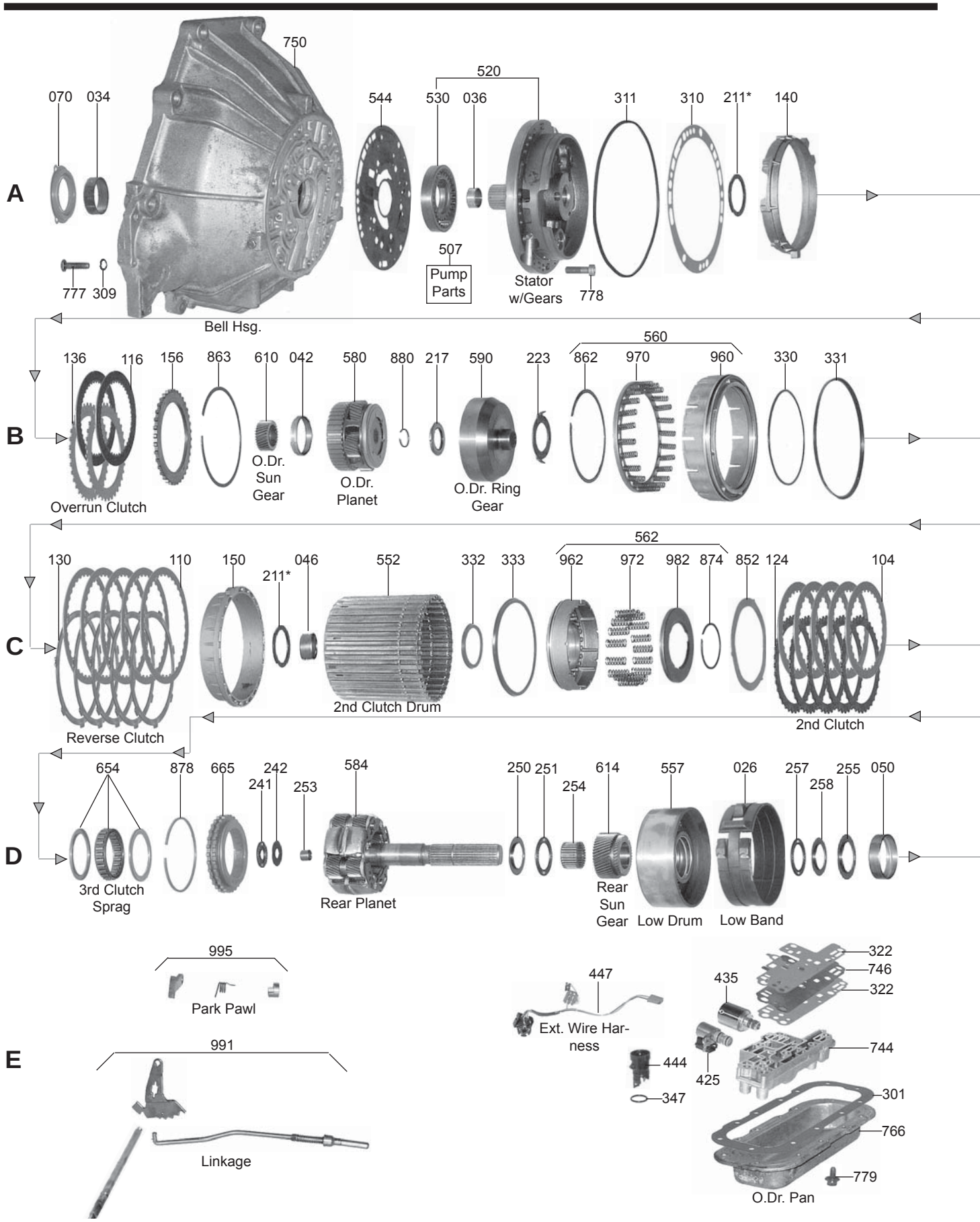

TH180/TH180C (4L30E)

RWD 4 Speed

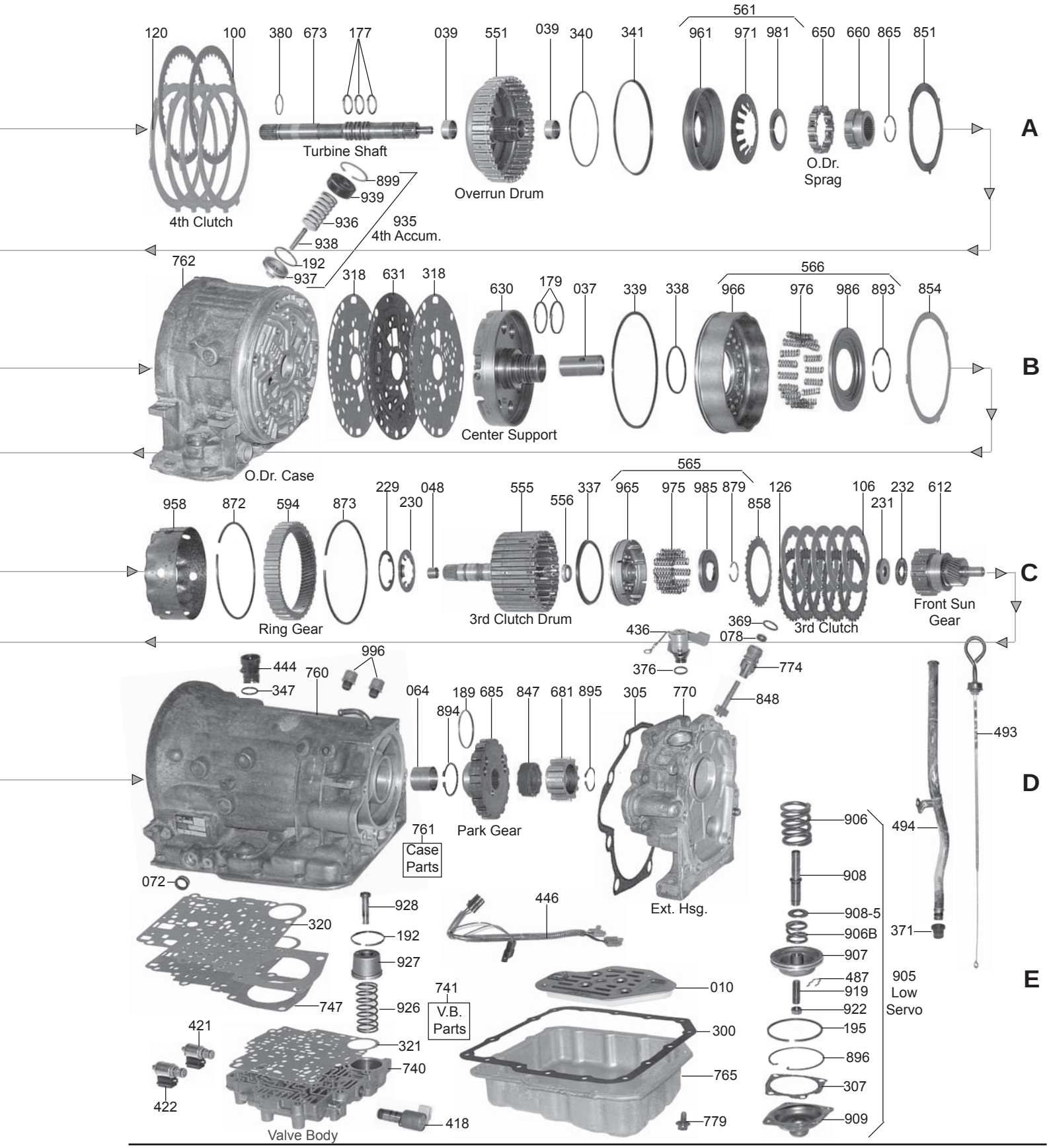

TH180/TH180C (3L30) / 4L30E

ILL#	PART#	DESCRIPTION	QTY	REF #
		OVERHAUL KIT		
	K54900	Overhaul Kit, [TH180 / 180C] (Combo) 1969-Up	1	
	K54900A	Overhaul Kit, (Holden) (Australian) 1969-Up	1	
	K54900E	Overhaul Kit, [4L30E] (With Overrun Bonded Piston) 1989-Up	1	
		MASTER L/STEEL KIT		
	DK5400-S	Master L/Steel Kit, [TH180 / 180C] (Combo) 1969-Up	1	
	DK5400P-S	Master L/Steel Kit, [TH180C] (Postal)	1	
	DK5400A-S	Master L/Steel Kit, (Holden) (Australian) 1969-Up	1	
	DK5400E-S	Master L/Steel Kit, [4L30E] (With Overrun Bonded Piston) 1990-97	1	
	DK5400F-S	Master L/Steel Kit, [4L30E] (With Overrun Bonded Piston) 1998-Up	1	
		MASTER W/STEEL KIT		
	DK5400	Master W/Steel Kit, [TH180 / 180C] (Combo) 1969-Up	1	
	DK5400P	Master W/Steel Kit, [TH180C] (Postal)	1	
	DK5400A	Master W/Steel Kit, (Holden) (Australian) 1969-Up	1	
	DK5400E	Master W/Steel Kit, [4L30E] (With Overrun Bonded Piston) 1989-97	1	
	DK5400F	Master W/Steel Kit, [4L30E] (With Overrun Bonded Piston) 1998-Up	1	
		FILTER		
010	54800	Filter, [TH180 / 180C] 1969-Up	1	5258130
010	54800E	Filter, [4L30E] (1/2" Tall Pick-Up) (Clear Cover) (Isuzu & Honda) 1989-Up	1	8-96041-011-0
010	54800B	Filter, [4L30E] (11/16" Tall Pick-Up) (Black Cover) (BMW & Cadillac) 1991-Up	1	96015432
		FILTER KIT		
	FK54800	Filter Kit, [TH180 / 180C] 1969-Up	1	
	FK54800E	Filter Kit, [4L30E] (1/2" Tall Pick-Up) (Clear Cover) 1989-Up	1	
	FK54800B	Filter Kit, [4L30E] (11/16" Tall Pick-Up) (Black Cover) 1991-Up	1	
		MISC FILTERS		
015	54812	Filter, [4L30E] (PWM Solenoid Screen) (3-3/4" long) (In Valve Body) 1989-Up	1	94014437
016	34665	Filter, [TH180 / 180C] (Governor) (Tapered)	1	8627509
		BANDS		
026	54313	Band, [TH180 / 180C / 4L30E] (Low) 1969-Up	1	8958960
		BUSHINGS		
	K54901	Bushing Kit, [TH180 / 180C] 1969-Up	1	
	K54901E	Bushing Kit, [4L30E] 1989-Up	1	
034	8005	Bushing, [TH180 / 180C / 4L30E] (Converter Housing) (Front) 1969-Up	1	8958661
034	54253-01	Bushing, [4L30E] (Converter Housing)	1	Sonnax
036	65002	Bushing, [TH180 / 180C / 4L30E] (Pump Stator) (Front) 1969-Up	1	8628915
037	54015	Bushing, [TH180 / 180C] (Pump Stator) (Rear) 1969-Up	1	8958621
042	75006	Bushing, [4L30E] (Overdrive Planet) 1989-Up	1	8631905
037	54009	Bushing, [4L30E] (Center Support) 1989-Up	1	
046	54006	Bushing, [TH180 / 180C / 4L30E] (2nd Clutch Drum) 1969-Up	1	5258128
048	54010	Bushing, [4L30E] (3rd Clutch Drum Shaft) (Pilot) 1989-Up	1	8634925
050	54007	Bushing, [TH180 / 180C / 4L30E] (Input Sun Gear) 1969-Up	1	5258075
064	54003	Bushing, [TH180 / 180C / 4L30E] (Case) 1969-Up	1	5258191
066	38004	Bushing, [TH180 / 180C / 4L30E] (Extension Housing) (Bronze) 1969-Up	1	6260048

TH180/TH180C (3L30) / 4L30E

		METAL CLAD SEALS		
070	54150	Seal, [TH180 / 180C] (Front) (Converter Housing) 1969-Up	1	8670283
070	54151	Seal, [4L30E] (Front) (Converter Housing) 1989-Up	1	8-96015-187-0
072	38511	Seal, [TH180 / 180C] (Linkage Shaft) 1969-Up	1	8623056
072	84511	Seal, [4L30E] (Linkage Shaft) 1989-Up	1	8644709
074	54152	Seal, [TH180 / 180C / 4L30E] (Rear) (Sidekick, Tracker) (2WD) 1990-Up	1	96040762
074	8850B	Seal, [TH180 / 180C / 4L30E] (Rear) 1969-Up	1	1243402
074	16695ES	Seal, [TH180 / 180C / 4L30E] (Rear) (With Flange) (With Short Boot)	1	
074	82152	Seal, [4L30E] (BMW) (Extension Housing Seal) 1989-02	1	96014416
076	89155	Seal, [TH180 / 180C / 4L30E] (Rear) (2.145"OD) (Sidekick, Tracker) (4x4)	1	96054039
078	3991	Seal, [TH180 / 180C] (Speed-O Shaft) 1969-Up	1	1240382
		FRICTION CLUTCH		
100	54106	Friction, [4L30E] (4th Clutch) (.086" Thick) 1989-Up	3	8-96014-459-0
104	54204	Friction, [TH180 / 180C / 4L30E] (2nd Clutch) (.097" Thick) 1969-Up	3-5	96013664
106	54206	Friction, [TH180 / 180C / 4L30E] (3rd Clutch) (.100" Thick) 1969-97	2-5	90064281
106	54206A	Friction, [4L30E] (3rd Clutch) (.063" Thick) 1998-Up	2-6	96017371
110	54222	Friction, [TH180 / 180C / 4L30E] (Reverse Clutch) (.095" Thick) 1969-89	2-5	96013665
110	54222A	Friction, [TH180C / 4L30E] (Reverse Clutch) (.098" Thick) 1990-Up (Kevlar)	2-5	
116	54108	Friction, [4L30E] (Overrun Clutch) (.086" Thick) 1989-Up	2	8-96014-195-0
	K54100	Friction Module, [TH180 / 180C] 1969-Up	1	
	K54100E	Friction Module, [4L30E] 1989-97	1	
	K54100F	Friction Module, [4L30E] 1998-Up	1	
		STEEL CLUTCH		
120	54107	Steel, [4L30E] (4th Clutch) (.080" Thick) 1989-Up	4	8-96014-187-0
124	54205A	Steel, [TH180 / 180C / 4L30E] (2nd Clutch) (.083" Thick) 1969-Up	3-6	96040118
124	54205	Steel, [TH180 / 180C / 4L30E] (2nd Clutch) (.070" Thick) 1969-Up	3-6	5258057
126	54221C	Steel, [TH180 / 180C / 4L30E] (3rd Clutch) (.083" Thick) 1969-Up	3-6	5258955
126	54221	Steel, [TH180 / 180C / 4L30E] (3rd Clutch) (.070" Thick) 1969-Up	3-6	5258086
130	54221A	Steel, [TH180] (Reverse Clutch) (.070" Thick) 1969-Up	3-6	5258019
130	54221B	Steel, [TH180 / 180C / 4L30E] (Reverse Clutch) (.083" Thick) 1969-Up	3-6	96040135
136	54109	Steel, [4L30E] (Overrun Clutch) (.082" Thick) 1989-Up	2	8-9604-194-0
	K54110	Steel Module, [TH180 / 180C] 1969-Up	1	
	K54110E	Steel Module, [4L30E] 1989-Up	1	
		CLUTCH PRESSURE PLATES		
140	54140	Spacer Plate, [4L30E] (4th Clutch) (Aluminum) 1989-Up	1	
150	54141	Spacer Plate, [TH180 / 180C] (Reverse Clutch) (3/4" Thick) (Aluminum) 1969-Up	1	8958733
150	54142	Spacer Plate, [4L30E] (Reverse Clutch) (1-3/16" Thick) (Aluminum) 1989-Up	1	
156	54130	Pressure Plate, [4L40E] (Overrun Clutch) (.200" Thick) 1989-Up	1	
		MODULATORS		
160	54525C	Modulator, [TH180 / 180C] (1-Green Stripe) (Non-Broached Style) (Non-Adjustable) 69-Up	1	51-0302-02-00
160	54525	Modulator, [TH180 / 180C] (1-Blue Stripe) (Broached Style) (Non-Adjustable) 1969-Up	1	8958947
160	54525B	Modulator, [TH180 / 180C] (2-Green Stripes) (Postal) (*Can Use 54525C)	1	96013866
160	54525A	Modulator, [TH180 / 180C] (2-Blue Stripes) (Cheverolet Round Hole) (Adjustable) 1969-Up	1	96013028
160	54525D	Modulator, [TH180 / 180C] (1-Purple Stripe) (Suzuki, GEO Tracker) (Adjustable) 1989-Up	1	96040434
162	13266	Hose, [TH180 / 180C] (Modulator) (Elbow) 1969-Up	1	C1AZ-7B087-E
163	54680	Valve, [TH180 / 180C] (Under Modulator) 1969-Up	1	96040265

TH180/TH180C (3L30) / 4L30E

163	54681	Sleeve, [TH180 / 180C] (Aluminum) (*For Valve Under Modulator) 1969-Up	1	5258921
164	54682	Pin, [TH180 / 180C] (Modulator) 1969-Up	1	5258244
		VALVE BODY KITS		
	K54908	Valve Body Kit, [TH180C] (Post Office, Luv) 1982-Up	1	Transgo
	K54908E-S	Valve Body Kit, [4L30E]	1	Superior
	K54908E	Shift Kit, [4L30E] (Contains: Center Support Bushing, Driver, Turbine Shaft Ball & Capsule, TCC Spring in Stator, Pump Alignment Tool, Drill Bit for Valve Body) 1991-04	1	Transgo
		OIL SEALING RINGS		
	K54903	Ring Kit, [TH180 / 180C] 1969-Up	1	
	K54903A	Ring Kit, [TH180 / 180C] (*For Holden Only)	1	
	K54903E	Ring Kit, [4L30E] 1989-Up	1	
177	65301T	Ring, [4L30E] (Turbine Shaft) (Scarf Cut) (Teflon) 1989-Up	3	8628090
179	54302	Ring, [TH180 / 180C] (Stator) 1969-Up (*4L30E Center Support 1989-Up)	2-4	5258106
189	54300	Ring, [TH180 / 180C / 4L30E] (Governor Hub) 1969-Up	3	5258837
189	54300A	Ring, [TH180C] (Governor Hub) (*For Holden Only)	3	5258100
192	34711	Ring, [TH180 / 180C / 4L30E] (Accumulator Piston) 1969-Up	1	8623653
195	54303	Ring, [TH180 / 180C / 4L30E] (Low Servo Piston) 1969-Up	1	5258159
		WASHERS & BEARINGS		
	K54907	Washer Kit, [TH180 / 180C] 1969-86	1	
	K54907A	Washer Kit, [TH180 / 180C / 4L30E] 1987-Up	1	
	K54907D	Washer Kit, [TH180 / 180C / 4L30E] (Pump / Center Support) (6-Selectives) (No Tab) 69-Up	1	
211	54701F	Washer, [TH180C / 4L30E] (Pump / Center Support) (.061") (3-Tab) (Yellow) 1987-Up	1	94040561
211	54701	Washer, [TH180C / 4L30E] (Pump / Center Support) (.069") (3-Tab) (Red) 1987-Up	1	94040562
211	54701A	Washer, [TH180C / 4L30E] (Pump / Center Support) (.077") (3-Tab) (Black) 1987-Up	1	94040563
211	54701B	Washer, [TH180C / 4L30E] (Pump / Center Support) (.082") (3-Tab) (Green) 1987-Up	1	
211	54701C	Washer, [TH180C / 4L30E] (Pump / Center Support) (.084") (3-Tab) (White) 1987-Up	1	94040564
211	54701D	Washer, [TH180C / 4L30E] (Pump / Center Support) (.092") (3-Tab) (Green) 1987-Up	1	94040565
211	54701E	Washer, [TH180C / 4L30E] (Pump / Center Support) (.100") (3-Tab) (Blue) 1987-Up	1	94040566
211	54701-03K	Washer & Shim Kit, [TH180C / 4L30E] (Pump / Center Support) (With (2) .075" 3-Tab Washers, (4) .010" Shims, & (2) .030" Shims)	1	Sonnax
217	65422	Bearing W/Race, [4L30E] (Overdrive Planet to Overdrive Ring Gear) 1989-Up	1	8634035
223	65425	Washer, [4L30E] (Overdrive Ring Gear to Overdrive Case) (2-Tab)	1	8-96014-390-0
229	54702A	Washer, [TH180 / 180C / 4L30E] (2nd Drum to 3rd Drum) (Front) (5-Tab Metal) 1969-Up	1	5258945
229	54702	Washer, [TH180 / 180C / 4L30E] (2nd Drum to 3rd Drum) (Front) 1969-Up	1	96040241
230	54713	Washer, [TH180 / 180C / 4L30E] (2nd Drum to 3rd Drum) (Rear) 1969-Up	1	96013403
231	54708	Race, [TH180 / 180C / 4L30E] (3rd Drum to Sun Gear) (Front) 1969-Up	1	
232	54709	Bearing, [TH180 / 180C / 4L30E] (3rd Drum to Sun Gear) (Rear) 1969-Up	1	96040078
241	54707	Bearing, [TH180 / 180C] (Sun Gear to Planet) (.520"ID) 1969-Up	1	
241	54707A	Bearing, [4L30E] (Sun Gear to Planet) (.715"ID) 1989-Up	1	8-96014-602-0
242	54712	Race, [TH180 / 180C] (Sun Gear to Planet) (.520"ID) 1969-Up	1	5258555
242	54706	Race, [4L30E] (Sun Gear to Planet) (.725"ID) 1989-Up	1	
250	54705	Race, [TH180 / 180C] (Sun Gear to Low Drum & Low Drum to Case) 1969-Up	2	
251	54704	Bearing, [TH180 / 180C] (Sun Gear to Low Drum & Low Drum to Case) 1969-Up	2	5686837
254	54715	Caged Bearing, [4L30E] (Stays in Output Shaft) 1989-Up	1	
257	54704	Bearing W/Race, [4L30E] (Low Drum to Case) 1989-Up	1	8-96014-084-0
		GASKETS & RUBBER COMPONENTS		
300	13600	Gasket, [TH180 / 180C] (Bottom Pan) 1969-Up	1	14050668

300	54501	Gasket, [4L30E] (Isuzu) (Bottom Pan) 1989-Up	1	8-9014-234-0
300	54501A	Gasket, [4L30E] (BMW) (Bottom Pan) 1991-Up	1	98091
301	54502	Gasket, [4L30E] (Front Overdrive Pan) 1989-Up	1	8-9014-235-0
305	13613	Gasket, [TH180 / 180C] (Extension Housing) 1969-Up	1	96040534
305	54613	Gasket, [4L30E] (Extension Housing) 1989-Up	1	8-96014-417-0
307	13614	Gasket, [TH180 / 180C] (Servo Cover) 1969-Up	1	5258339
309	13268A	Gasket, [TH180 / 180C] (Pump Bolt Washer) 1969-Up	12	3884683
310	13601B	Gasket, [TH180 / 180C] (Pump) 1969-Up	1	5258939
310	13601E	Gasket, [4L30E] (Pump) 1989-Up	1	96014973
311	13602	O-Ring, [TH180 / 180C / 4L30E] (Pump) 1969-Up	1	96017189
318	54509	Gasket, [4L30E] (Center Support to Plate) 1989-91 (Takes 2)	2	
318	54509A	Gasket, [4L30E] (Center Support to Plate) 1992-Up (Takes 2)	2	96016514
320	13610	Gasket, [TH180 / 180C] (Valve Body) (Upper) (*Except 1987-Up - Post Office, Luv, Tracker & Sidekick) 1969-Up	1	96040729
320	13610A	Gasket, [TH180 / 180C] (Valve Body) (Upper) (Post Office, Luv, Tracker & Sidekick)1987-Up	1	92000777
320	13610E	Gasket, [4L30E] (Valve Body) (Upper) 1989-Up	1	8-96016-265-0
321	13612	Gasket, [TH180 / 180C] (Valve Body) (Lower) (*Except 1987-Up - Post Office, Luv, Tracker & Sidekick) 1969-Up	1	5258443
321	13612A	Gasket, [TH180 / 180C] (Valve Body) (Lower) (Post Office, Luv, Tracker & Sidekick) 87-Up	1	92000776
321	13612E	Gasket, [4L30E] (Valve Body) (Lower) 1989-Up	1	8-96015-4170-0
322	13211	Gasket, [4L30E] (Auxilary Valve Body) (Upper) 1989-Up	1	
322	13216	Gasket, [4L30E] (Auxilary Valve Body) (Lower) 1989-Up	1	
326	13617	Gasket, [TH180 / 180C] (Filter) 1969-Up	1	5258245
327	54615	Gasket, [TH180 / 180C] (Modulator) 1969-Up	1	
336	13619	Lip Seal, [TH180 / 180C / 4L30E] (3rd Clutch) (Inner)	1	5258543
368	3410	O-Ring, [TH180 / 180C] (Speed-O Sleeve) 1969-Up	1	10054241
371	3291	O-Ring, [TH180 / 180C] (Filler Tube) 1969-Up	1	6264902
371	3292	Boot, [TH180 / 180C / 4L30E] (Filler Tube) 1969-Up	1	
372	3667	O-Ring, [TH180 / 180C] (Detent Cable) 1969-Up	1	5258404
380	13503A	O-Ring, [TH180C / 4L30E] (Turbine Shaft) (Goes Behind Splines) 1982-Up	1	
		TECHNICAL MANUALS		
	TM4L30E	Tech Manual, [4L30E] 1989-Up	1	ATSG
		ELECTRICAL COMPONENTS		
410	54991E	Switch, [4L30E] (MLPS With 6” Wire Harness)	1	
416	35644	Switch, [TH180 / 180C] (Governor Pressure) (44 PSI) 1969-Up	1	8648062
416	35646	Switch, [TH180 / 180C] (Governor Pressure) (46 PSI) 1969-Up	1	8648063
416	35648	Switch, [TH180 / 180C] (Governor Pressure) (48 PSI) 1969-Up	1	8648064
416	35650	Switch, [TH180 / 180C] (Governor Pressure) (50 PSI) 1969-Up	1	8648065
416	35652	Switch, [TH180 / 180C] (Governor Pressure) (52 PSI) 1969-Up	1	8648066
416	35654	Switch, [TH180 / 180C] (Governor Pressure) (54 PSI) 1969-Up	1	8648067
418	54927	Solenoid, [4L30E] (PWM) (Band Control) 1989-Up	1	52-0248
421	54925	Solenoid, [4L30E] (1-2 & 3-4 Shift) 1989-Up	1	4394722
422	54926	Solenoid, [4L30E] (2-3 Shift) 1989-Up	1	4394243
425	54601	Solenoid, [TH180C] (TCC Lock-Up) 1980-Up	1	96040316
425	54954	Solenoid, [TH180C] (TCC Lock-Up) 1988-Up	1	Rostra
425	54924	Solenoid, [4L30E] (TCC Lock-Up) 1989-Up (With 2-Prong Connector)	1	4394177
425	54924A	Solenoid, [4L30E] (TCC Lock-Up) 2000-Up (With 2-Prong Oval Connector) (*Trooper Only)	1	8-96042-666-0
435	34605A	Solenoid, [4L30E] (Pressure Control) (Force Motor) 1989-99 (Has 2-Flat Blades on End of Solenoid)	1	24220158

TH180/TH180C (3L30) / 4L30E

435	56842A	Solenoid, 4L30E (Pressure Control) (Force Motor) 2000-Up	1	
435	34605B	Solenoid, [4L30E] (Pressure Control) (Force Motor) (BMW) 1990-Up	1	8677314
436	54922	Sensor, [4L30E] (Output Speed) (*Except BMW) 1989-Up	1	8-96014-442-0
442	K77912	Universal Adjustment Vaccum Switch, [TH180C] (1" to 6" of Vaccum)	1	Superior
442	K77912A	Universal Adjustment Vaccum Switch, [TH180C] (6" to 22" of Vaccum)	1	Superior
444	54984	Connector, [4L30E] (Case) (Round 5-Wire) 1989-Up	1	8665015
444	77983	Connector, [TH180C] (Case) (3-Prong)	1	8634383
444	84983	Connector, [TH180C / 4L30E] (Case) (4-Prong) (Square) 1990-99	1	
444	54983	Connector, [4L30E] (Case) (7-Prong) 2000-Up	1	8651620
445	54994	Wire Harness, [4L30E] (External) (Round 5-Wire) 1989-Up	1	
445	PE54-1	Repair Kit, [4L30E] (External Wire Harness) (Round 5-Wire Type) 1989-Up	1	
446	54995	Wire Harness, [4L30E] (Internal) (4-Wire Connector That Plugs Into Case) (Connector With (3) 2-Wire Connectors) 1989-Up	1	
446	54995A	Wire Harness, [4L30E] (Internal) (4-Wire Connector That Plugs Into Case) (Connector With 2-Wire Connectors) 1989-Up	1	
446	54995B	Wire Harness, [4L30E] (Internal) (4-Wire Connector That Plugs Into Case) (Connector With 2-Wire Connectors & 1-Wire & (1) Ground Connector) 1989-Up	1	
446	54995C	Wire Harness, [4L30E] (Internal) (6-Wire Round Connector That Plugs Into Case) (Connector With (3) 2-Wire Connectors) 1989-Up	1	
446	54995D	Wire Harness, [4L30E] (Internal) (9-Pin Round Case Connector Made to the Wire Harness) (With (4) 2-Wire and (2) 1-Wire Connectors)	1	
447	54996	Wire Harness, [4L30E] (Internal) (Auxillary) (5-Prong Round Connector That Plugs Into Auxillary Case) (Connector With (2) 1-Wire, (1) 2-Wire Connectors and (1) Blade Ground Connector) 1989-Up	1	
447	54996A	Wire Harness, [4L30E] (Internal) (Auxillary) (4-Wire Square Connector That Plugs Into The Auxillary Case) (Connector With (2) 1-Wire and (1) 2-Wire Conn W/Side Locking Tabs) 89-Up	1	
447	54996B	Wire Harness, [4L40E] (Internal) (Auxillary) (4-Wire Square Connector That Plugs Into Auxillary Case) (Connector With (2) 1-Wire and (1) 2-Wire Blue Conn Without Side Locking Tabs) 1989-Up	1	
447	54996C	Wire Harness, [4L30E] (Internal) (Auxillary) (2-Wire Square Connector That Plugs Into The Auxillary Case) (Connector With (5) 1-Blade Connectors) 1989-Up	1	
		MISC. COMPONENTS		
	30126	Union, (5/16")	1	
487	30130	E-Clip, (GM)	1	9431762
490	35910	Vent, (GM) (Case) (Plastic)	1	8640496
494	K35999R	Filler Tube (Repair End)	1	Teckpak
		HARD PARTS		
520	54200	Stator W/Gears, [TH180] (Opel) (With Valve) 1969-Up	1	90064214
520	54200A	Stator W/Gears, [TH180] (Chevy) (Without Valve) 1969-80	1	
520	54200C	Stator W/Gears, [TH180] (Non Lock-Up) 1981	1	
520	54200D	Stator W/Gears, [TH180C] (Lock-Up) (*Uses a No Tab Washer # 211) 1982-86	1	96040245
520	54200BA	Stator W/Gears, [TH180C] (Lock-Up) (*Uses a 3-Tab Washer # 211) 1987-Up	1	
520	54200B	Stator W/Gears, [TH180C] (Lock-Up) (*Uses a 3-Tab Washer) 1987-Up (Has A Stepped Hole For A Tube & Capsule With Checkball in the Gasket Surface Area)	1	
520	54200E	Stator W/Gears, [4L30E] (With 2-Valves) 1990-96	1	8-96041-018-0
520	54200F	Stator W/Gears, [4L30E] (With 2-Valves) 1997-Up	1	
520	54200G	Stator W/Gears, [4L30E] (With 4-Valves) (PWM) 2000-Up	1	
	K54200E	Pump Conversion Kit, (*To Replace 4-Valve Pump with 2-Valve Pump, Bell Housing & Turbine Shaft)	1	
		PUMP COMPONENTS		
507	54754-02	Sleeve, [4L30E] (TCC Regulator Valve Sleeve) **(*For PWM Only, Does Not Require Machining)**	1	Sonnax

507	54200-06K	Valve & Sleeve Kit, [4L30E] (Pressure Regulator Boost) (Large Ratio)	1	Sonnax
507	54200-12K	Valve & Sleeve Kit, [4L30E] (Pressure Regulator Boost) (Small Ratio)	1	Sonnax
507	54200-01K	Valve & Sleeve Kit, [4L30E] (Pressure Regulator Boost) (Medium Ratio)	1	Sonnax
530	54201	Pump Gears, [TH180 / 180C / 4L30E] (.626" Thick) 1969-Up	1	
		HARD PARTS (Continued)		
544	54202	Plate, [TH180] (Pump) 1969-80	1	5258850
544	54202A	Plate, [TH180] (Pump) (Non Lock-Up) 1981	1	
544	54202B	Plate, [TH180C] (Pump) (Lock-Up) (056 Ink Letters) 1982-Up	1	96013212
544	54202C	Plate, [TH180C] (Pump) (Lock-Up) (272 Ink Letters) 1982-Up	1	
544	54202E	Plate, [4L30E] (Pump) (069 Ink Letters) 1989-Up	1	8-96015-519-0
544	54202F	Plate, [4L30E] (Pump) (507 Ink Letters) 1989-Up	1	
544	54202G	Plate, [4L30E] (Pump) (519 Ink Letters) 1989-Up	1	
544	54202H	Plate, [4L30E] (Pump) (521 Ink Letters) 1989-Up	1	
544	54202I	Plate, [4L30E] (Pump) (548 Ink Letters) 1989-Up	1	
544	54202J	Plate, [4L30E] (Pump) (630 Ink Letters) 1989-Up	1	
544	54202K	Plate, [4L30E] (Pump) (926 Ink Letters) 1989-Up	1	
544	54202L	Plate, [4L30E] (Pump) (995 Ink Letters) 1989-Up	1	
551	54914	Drum, [4L30E] (Overrun Clutch) (2 Clutch) 1989-Up	1	8-96015-290-0
552	54254	Drum, [TH180] (2nd Clutch) 1969-78	1	5258129
552	54254B	Drum, [TH180 / 180C] (2nd Clutch) (.100" From Snap Ring #874 to Surface Where Washer #229 Rides) 1979-Up	1	
552	54254A	Drum, [4L30E] (2nd Clutch) (.160" From Snap Ring #874 to Surface Where Washer #229 Rides) 1989-Up	1	
555	K54254A	Drum Kit, [4L30E] (2nd Clutch) (With Piston Kit) 1989-Up	1	
555	54268	Drum W/Shaft, [TH180] (3rd Clutch) (Shaft Has a Pilot) 1969-80	1	8958686
555	54268C	Drum W/Shaft, [TH180C] (3rd Clutch) (Lock-Up) 1981-Up	1	
555	54268A	Drum W/Shaft, [TH180] (3rd Clutch) (Non-Lock-Up) 1981 (*No Check Ball in Shaft)	1	
555	54268E	Drum W/Shaft, [4L30E] (3rd Clutch) (With 3-1/2" Long Shaft) 1989-Up	1	8-96041-002-0
557	54256	Drum, [TH180 / 180C] (Low Band With Sun Gear Assembly) (35 Teeth) 1969-Up	1	8958865
557	K54256A	Drum, [TH180 / 180C / 4L30E] (Low Band With Sun Gear Assembly) (42 Teeth) 1969-Up	1	
557	54256A	Drum, [4L30E] (Low Band) (Less Rear Sun Gear) 1989-Up	1	8-96014-581-0
557	K54256B	Drum, [4L30E] (Low Band With Sun Gear Assembly) (46 Teeth) 1989-Up	1	
560	K54265	Piston Kit, [4L30E] (4th Clutch) 1989-Up	1	
561	K54887	Piston Kit, [4L30E] (Overrun Clutch) 1989-Up	1	
562	K54261	Piston Kit, [TH180 / 180C / 4L30E] (2nd Clutch) (1.450" Overall Thickness) 1969-Up	1	
562	K54261A	Piston Kit, [TH180 / 180C / 4L30E] (2nd Clutch) (1.250" Overall Thickness) 1969-Up	1	
565	K54262	Piston Kit, [TH180 / 180C] (3rd Clutch) (15/16" Thick) 1969-Up	1	
565	K54262A	Piston Kit, [4L30E] (3rd Clutch) (9/16" Thick) 1989-Up	1	
566	K54260	Piston Kit, [TH180 / 180C] (Reverse Clutch) (1-1/2" Thick) 1969-Up	1	
566	K54260A	Piston Kit, [TH180 / 180C] (Reverse Clutch) (1-5/8" Thick) 1969-Up	1	
566	K54260B	Piston Kit, [4L30E] (Reverse Clutch) (1-5/16" Thick) 1989-Up	1	
580	54915	Planet, [4L30E] (Overdrive) (31 Teeth Sun Gear # 610) 1989-Up	1	8-96014-376-0
584	54503A	Planet, [TH180 / 180C] (13-3/4" Output Shaft) (3 Gear) (25 Teeth Sun Gear # 612) 1969-Up	1	715007
584	K54503A	Planet Kit, [TH180 / 180C] (13-3/4" Output Shaft) (3 Gear) (25 Teeth Sun Gear # 612) 69-Up (Contains: # 584, 612, 614, & 594)	1	
584	54503B	Planet, [TH180 / 180C] (13-3/4" Output Shaft) (4 Gear) (25 Teeth Sun Gear # 612) 1969-Up	1	

TH180/TH180C (3L30) / 4L30E

584	54503AA	Planet, [TH180 / 180C] (12" Output Shaft) (3 Gear) (30 Teeth Sun Gear # 612) 1969-Up	1	
584	54503AB	Planet, [TH180 / 180C] (13-3/4" Output Shaft) (3 Gear) (30 Teeth Sun Gear # 612) 1969-Up	1	
584	54503AC	Planet, [TH180C] (8" Output Shaft) (3 Gear) (30 Teeth Sun Gear # 612) (Geo Tracker) (4x4)	1	
584	54503AD	Planet, [TH180 / 180C] (8-1/2" Output Shaft) (3 Gear) (30 Teeth Sun Gear # 612) 1969-Up	1	
584	54503F	Planet, [TH180] (With Output Shaft) (Fiat)	1	
584	54503P	Planet, [TH180] (With Output Shaft) (Peugeot)	1	
584	54503G	Planet, [4L30E] (10-1/8" Output Shaft) (2WD) (4 Gear) (46 Teeth Sun Gear # 614) 1989-Up	1	
584	54503E	Planet, [4L30E] (8" Output Shaft) (4X4) (4 Gear) (46 Teeth Sun Gear # 614) 1989-Up	1	8-94450-758-0
584	K54503E	Planet Kit, [4L30E] (8" Output Shaft) (4X4) (4 Gear) (46 Teeth Sun Gear # 614) 1989-Up (Contains: # 584, 612, 614, & 594)	1	
584	54503H	Planet, [4L30E] (8-3/8" Output Shaft) (4X4) (4 Gear) (42 Teeth Sun Gear # 614) 1989-Up	1	
584	54503ET	Planet, [4L30E] (11-1/2" Output Shaft) (2WD) (4 Gear) (42 Teeth Sun Gear # 614) 1989-Up	1	
584	54503M	Planet, [4L30E] (11-1/2" Output Shaft) (4 Gear) (46 Teeth Sun Gear # 614) 1989-Up (.550"OD Pilot on Rear of Shaft) (Bolt on Yoke)	1	
584	54503K	Planet, [4L30E] (11-1/2" Output Shaft) (4 Gear) (46 Teeth Sun Gear # 614) 1989-Up (.630"OD Pilot on Rear of Shaft) (Bolt on Yoke)	1	
590	54916	Ring Gear, [4L30E] (Overdrive Planet) (31 Teeth Sun Gear # 610) 1989-Up	1	8-96014-202-0
594	54269	Ring Gear, [TH180 / 180C] (Planet) (73 Teeth) (25 Teeth Sun Gear # 612) 1969-Up	1	8958696
594	54269A	Ring Gear, [TH180C / 4L30E] (Rear Planet) (90 Teeth) (30 Teeth Sun Gear # 612) 1989-Up	1	8-96014-576-0
610	54750	Sun Gear, [4L30E] (Overdrive Planet) (31 Teeth) 1989-Up	1	8-96014-199-0
612	54272	Sun Gear, [TH180 / 180C] (With Inner Race) (25 Teeth) 1969-86	1	8958866
612	54272B	Sun Gear, [4L30E] (With Inner Race) (30 Teeth) (With Pilot) 1989-Up	1	8-96014-073-0
612	54272A	Sun Gear, [TH180C] (With Inner Race) (30 Teeth) (No Pilot) 1987-Up	1	
614	54748	Sun Gear, [4L30E] (Rear) (46 Teeth) (Without Low Drum) 1989-Up	1	8-96016-037-0
614	54748A	Sun Gear, [4L30E] (Rear) (42 Teeth) (Without Low Drum) 1989-Up	1	
630	54912A	Center Support, [4L30E] (Cast # 069 DD2) (With 1-Valve) (*Uses No Tab Washer # 211)	1	8-96041-121-0
630	54912CA	Center Support, [4L30E] (Cast # 069 DD1) (With 2-Valves) (*Uses 3-Tab Washer # 211)	1	
630	54912	Center Support, [4L30E] (Cast # 069) (With 1-Valve) (*Uses 3-Tab Washer # 211)	1	
630	54912C	Center Support, [4L30E] (Cast # 513 FU) (With 2-Valves) (*Uses No Tab Washer # 211)	1	
630	54912AA	Center Support, [4L30E] (Cast # 513 FU) (With 1-Valve) (*Uses No Tab Washer # 211)	1	
630	54912B	Center Support, [4L30E] (Cast # 513 FU) (With 1-Valve) (*Uses 3-Tab Washer # 211)	1	
630	54912CB	Center Support, [4L30E] (Cast # 513) (With 2-Valves) (*Uses 3-Tab Washer # 211)	1	
631	54913	Plate, [4L30E] (Overdrive Case to Center Support) 1989-Up	1	8-96041-091-0
		SPRAGS & ROLLER CLUTCHES		
650	65724	Sprag, [4L30E] (Overdrive) 1989-Up	1	8634049
654	77725	Sprag, [TH180 / 180C / 4L30E] (3rd Clutch) (26-Elements) 1969-Up	1	10121024
		HARD PARTS (Continued)		
660	65758	Inner Race, [4L30E] (Overdrive Sprag) 1989-Up	1	8-08634-038-0
665	54273	Outer Race, [TH180 / 180C] (3rd Clutch Sprag) (.505" Thick) 1969-Up	1	5258351
665	54273A	Outer Race, [4L30E] (3rd Clutch Sprag) (.555" Thick) 1989-Up	1	
673	54911	Turbine Shaft, [4L30E] (10-1/8" Long) 1989-Up	1	8-96014-366-0
680	54410	Governor, [TH180 / 180C] (2-Bolt Type) 1969-Up	1	
680	54410A	Governor, [TH180 / 180C] (4-Bolt Type) 1969-Up	1	8-96013-408-0
681	54898A	Electric Pick-Up, [4L30E] (12-Lug) 1989-Up	1	8-96015-053-0
685	54270	Support, [TH180 / 180C] (Governor) (With Park Gear) 1969-Up	1	
685	54270A	Support, [4L30E] (Rear) (1-Ring) 1989-Up	1	8-96015-410-0
698	54799	Oil Baffle, [4L30E] (Goes In Overdrive Case Under # 631 Plate) (*Plastic, Looks Like Cork Screw)	1	

TH180/TH180C (3L30) / 4L30E

		VALVE BODIES (REBUILT)		
740	GM-4660	Valve Body, [4L30E] (With 3-Solenoids) 1989-Up	1	
		VALVE BODIES		
740	54250	Valve Body, [TH180] 1969-80	1	
740	54250A	Valve Body, [TH180] (Non Lock-Up) (Chevy) 1981	1	
740	54250B	Valve Body, [TH180C] (Lock-Up) 1982-Up	1	96040327
740	54250C	Valve Body, [TH180C] (Lock-Up) (Without Plate) (Seperator Plate Bolts to the Trans) 82-Up	1	96040749
740	54250EA	Valve Body, [4L30E] (With 3-Solenoids) 1989-Up	1	8-96015-467-0
744	54250EB	Aux. Valve Body, [4L30E] (Cast Iron) 1989-Up	1	
		VALVE BODY COMPONENTS		
	54250-03K	Pin Kit, Oversized Accumulator, [TH180 / 4L30E] (10-Pins, 20-E Clips, 10-Seals, & Reamer)	1	Sonnax
750	54253	Bell Housing, [TH180] 1969-80	1	
750	54253A	Bell Housing, [TH180 / 180C] 1981-Up	1	96013240
750	54253B	Bell Housing, [TH180C] (Isuzu, Trooper) 1981-Up	1	
750	54253E	Bell Housing, [4L30E] (Top Bolts 4-7/8") (Passenger Side Starter) 1989-Up	1	
750	54253F	Bell Housing, [4L30E] (Top Bolts 5-1/8") (Drivers Side Starter) (1-Threaded Boss Under Starter) (With 2" x 4-1/2" Window at the Bottom)	1	
750	54253G	Bell Housing, [4L30E] (Top Bolts 5-1/8") (Drivers Side Starter) (1-Threaded Boss Under Starter) & (1-Threaded Boss on Bottom Towards Center of Bell)	1	
750	54253H	Bell Housing, [4L30E] (Top Bolts 4-7/16") (Drivers Side Starter at 1:00) (BMW) (Cast # 96016284)	1	
750	54253J	Bell Housing, [4L30E] (Top Bolts 4-7/16") (Drivers Side Starter at 1:00) (BMW) (Cast # 96017562)	1	
760	54251	Case, [TH180] (Opel & Chevette) 1969-80	1	
760	54251A	Case, [TH180] (Non Lock-Up) (Chevette) 1981	1	
760	54251B	Case, [TH180C] (Lock-Up) (Chevette) 1982-Up (Shift Lever Is on the Drivers Side)	1	96013451
760	54251C	Case, [TH180C] (Lock-Up) (Post Office Vehicle)	1	
760	54251D	Case, [TH180C] (Lock-Up) (Tracker / Rodeo) (Shift Lever Is on the Passenger Side) (With 3-Bolt Governor Bore Shield)	1	
760	54251E	Case, [4L30E] (Case Connector Hole Is .870"ID on Drivers Side) 1989-Up	1	8-96041-007-0
760	54251F	Case, [4L30E] (Case Connector Hole Is 1.040"ID on Passengers Side)	1	
760	54251G	Case, [4L30E] (Case Connector Hole Is 1.040"ID & Linkage on Drivers Side) (No Dipstick Hole)	1	
760	54251H	Case, [4L30E] (Case Connector Hole Is 1.060"ID on Drivers Side)	1	
	76890-24K	Sleeve, 180/4L30E (Servo Pin Bore) **(*Requires Tools: S76890-TL24 & SERVO-FIX)**	1	Sonnax
	SERVO-FIX	Servo Pin Bore Reaming Fixture, [TH180 / 180C / 4L30E]	1	Sonnax
762	54919	Overdrive Case, [4L30E] (Cast # 96014955) 1989-Up	1	8-96041-192-0
762	54919A	Overdrive Case, [4L30E] (Cast # 96017506) (With Hole For Electrical Connector) 1989-Up	1	
762	54919B	Overdrive Case, [4L30E] (Cast # 96017506) (No Electrical Connector Hole) 1989-Up	1	
765	54987	Pan, [TH180 / 180C] (Bottom) 1969-Up	1	
765	54987C	Pan, [4L30E] (Bottom) (Rear) (*No Drain Plug) 1989-Up	1	8-96016-562-0
765	54987A	Pan, [4L30E] (Bottom) (Rear) (With 2-Drain Plugs) (Isuzu)	1	
765	54987B	Pan, [4L30E] (Bottom) (Rear) (With 2-Drain Plugs) (BMW)	1	
766	54988	Pan, [4L30E] (Overdrive Case) (Front) 1989-Up	1	8-96014-186-0
770	54252	Extension Housing, [TH180 / 180C] (Chevette) 1969-Up	1	96013753
770	54252A	Extension Housing, [TH180C] (9" Long) (Post Office Vehicle)	1	

TH180/TH180C (3L30) / 4L30E

770	54252B	Extension Housing, [TH180C] (7-3/8" Long) (1-Bolt Mount) (Tracker)	1	
770	54252EB	Extension Housing, [4L30E] (2WD) (4-5/8" Long) (Bearing Type) (With Speed Sensor on Top)	1	8-96015-268-0
770	54252F	Extension Housing, [4L30E] (2WD) (4-5/8" Long) (Bearing Type) (With Speed Sensor on Drivers Side)	1	8-9014-263-0
770	54252EC	Extension Housing, [4L30E] (4X4) (Isuzu) (Cast # 9601527G) 1989-Up	1	
770	54252G	Extension Housing, [4L30E] (4X4) (2-13/16" Thick) (Cast # 98015270) 1989-Up	1	
770	54252H	Extension Housing, [4L30E] (4X4) (2-1/2" Thick) (Cast # 96014096) 1989-Up	1	
774	54922	Speed-O Housing, [TH180 / 180C] (7/8" Steel) (For Metal Clad Seal) 1969-Up	1	25513247
774	54922A	Speed-O Housing, [TH180 / 180C] (7/8" Aluminum) (For Rubber Seal) 1970-Up	1	345215
847	54898	Gear, [TH180 / 180C] (Speed-O Drive) 1969-Up	1	90064073
847	54899	Gear, [4L30E] (Speed-O Drive) (7 Teeth) (Plastic With 2-Ears)	1	
849	35741	Clip, [TH180 / 180C] (Speed-O Gear) 1969-Up	1	6261781
851	54216	Cushion, [4L30E] (Overrun Clutch) 1989-Up	1	
852	54218	Cushion, [TH180 / 180C / 4L30E] (2nd Clutch) 1969-Up	1	5258990
854	54217	Cushion, [TH180 / 180C / 4L30E] (Reverse Clutch) 1969-Up	1	5258989
858	54215	Cushion, [TH180 / 180C] (3rd Clutch) 1969-Up	1	8958678
858	54215A	Cushion, [4L30E] (3rd Clutch) 1989-Up	1	
862	54600	Snap Ring, [4L30E] (Holds 4th Clutch Retainer to Overdrive Case) 1989-Up	1	8-08634-023-0
863	54602	Snap Ring, [4L30E] (Holds Overrun Pressure Plate in Drum) 1989-Up	1	8-08634-056-0
865	54603	Snap Ring, [4L30E] (Holds Overdrive Sprag Inner Race to Overrun Drum) 1989-Up	1	8-08634-274-0
872	54604	Snap Ring, [TH180 / 180C / 4L30E] (Holds Apply Ring to 2nd Drum) 1969-Up	1	8958619
874	54605	Snap Ring, [TH180 / 180C / 4L30E] (Holds Retainer to 2nd Drum) 1969-Up	1	5258093
878	54606	Snap Ring, [TH180 / 180C / 4L30E] (Holds Outer Race to 3rd Drum) 1969-Up	1	8958684
879	54607	Snap Ring, [TH180 / 180C / 4L30E] (Holds Retainer to 3rd Drum) 1969-Up	1	5258094
880	54608	Snap Ring, [4L30E] (Holds Overdrive Planet to Turbine Shaft) 1989-Up	1	8-96014-389-0
893	54605	Snap Ring, [TH180 / 180C] (Holds Reverse Spring Retainer to Stator) 1969-Up	1	5258093
893	54609	Snap Ring, [4L30E] (Holds Reverse Spring Retainer to Overdrive Case) 1989-Up	1	
894	54611	Snap Ring, [TH180 / 180C] (Holds Governor Support to Output Shaft) 1969-Up	1	5258116
894	54611A	Snap Ring, [4L30E] (Holds Governor Support to Output Shaft) 1989-Up	1	
895	54612	Snap Ring, [4L30E] (Holds Electric Pick-Up to Output Shaft) 1989-Up	1	8-96015-123-0
896	54613	Snap Ring, [TH180 / 180C] (Holds Low Servo Piston In) 1969-Up	1	
896	54614	Snap Ring, [4L30E] (Holds Low Servo Piston In) 1989-Up	1	
899	54615	Snap Ring, [4L30E] (Holds 4th Accumulator In Overdrive Case) 1989-Up	1	
905	K54895	Servo Assembly, [TH180 / 180C] (Low Band) 1969-Up	1	96040116
905	K54895A	Servo Assembly, [4L30E] (Low Band) 1989-Up	1	
935	K54890	Accumulator Assembly, [4L30E] (3-4) (O-Ring Type Piston)	1	
935	K54890A	Accumulator Assembly, [4L30E] (3-4) (With Molded Piston)	1	
939	54885	Cover, [4L30E] (3-4 Accumulator) (Bonded)	1	8-96017-093-0
958	54264B	Apply Ring, [TH180 / 180C] (2nd Clutch) (2-1/8" Tall) 1969-Up	1	5258965
958	54264	Apply Ring, [4L30E] (2nd Clutch) (1-1/2" Tall) 1989-Up	1	8-08958-937-0
958	54264A	Apply Ring, [4L30E] (2nd Clutch) (1-7/8" Tall) 1989-Up	1	
960	54265	Piston, [4L30E] (4th Clutch) 1989-Up	1	8-96014-928-0
961	54887	Piston, [4L30E] (Overrun Clutch) (Bonded) 1989-Up (*Retros for Steel Piston)	1	8-96014-577-0
962	54261	Piston, [TH180 / 180C] (2nd Clutch) (1.540" Overall Thickness) 1969-Up	1	5258109
962	54261A	Piston, [TH180 / 180C / 4L30E] (2nd Clutch) (1.250" Overall Thickness) 1969-Up	1	
965	54262	Piston, [TH180 / 180C] (3rd Clutch) 1969-Up	1	96040423

TH180/TH180C (3L30) / 4L30E

966	54260	Piston, [TH180 / 180C] (Reverse Clutch) (1-1/2" Thick) 1969-Up	1	5258971
966	54260A	Piston, [TH180 / 180C] (Reverse Clutch) (1-5/8" Thick) 1969-Up	1	
966	54260B	Piston, [4L30E] (Reverse Clutch) (1-5/16" Thick) 1989-Up	1	96040355
970	K54970	Retainer W/Spring, [4L30E] (4th Clutch Return) 1989-Up	1	8-08635-244-0
971	54419	Spring, [4L30E] (Overrun Clutch Return) 1989-Up	1	8-96014-902-0
972	K54940	Spring, [TH180 / 180C / 4L30E] (2nd Clutch Return) 1969-Up	1	8958719
975	K54941	Spring, [TH180 / 180C / 4L30E] (3rd Clutch Return) 1969-Up	1	
976	K54942	Spring, [TH180 / 180C] (Reverse Clutch Return) 1969-Up	1	
976	K54942A	Spring, [4L30E] (Reverse Clutch Return) 1989-Up	1	8-08958-719-0
981	54930	Retainer, [4L30E] (Overrun Clutch Spring) 1989-Up	1	8-96014-901-0
982	54931	Retainer, [TH180 / 180C / 4L30E] (2nd Clutch Spring) 1969-Up	1	5258038
985	54932	Retainer, [TH180 / 180C / 4L30E] (3rd Clutch Spring) 1969-Up	1	5258039
986	54933	Retainer, [TH180 / 180C] (Reverse Clutch Spring) 1969-Up	1	96040351
986	54933A	Retainer, [4L30E] (Reverse Clutch Spring) 1989-Up	1	
991	K54676	Linkage Assembly, [TH180 / 180C] (Internal) 1969-Up	1	
991	K54676A	Linkage Assembly, [4L30E] (Internal) 1989-Up	1	
995	K54678	Park Pawl W/Spring, [TH180 / 180C] 1969-Up	1	90064258
995	K54678A	Park Pawl W/Spring, [4L30E] 1989-Up	1	
999	K54679	Oil Tube Set, [TH180 / 180C] 1969-Up	1	

TH200/TH200C

RWD 3 Speed

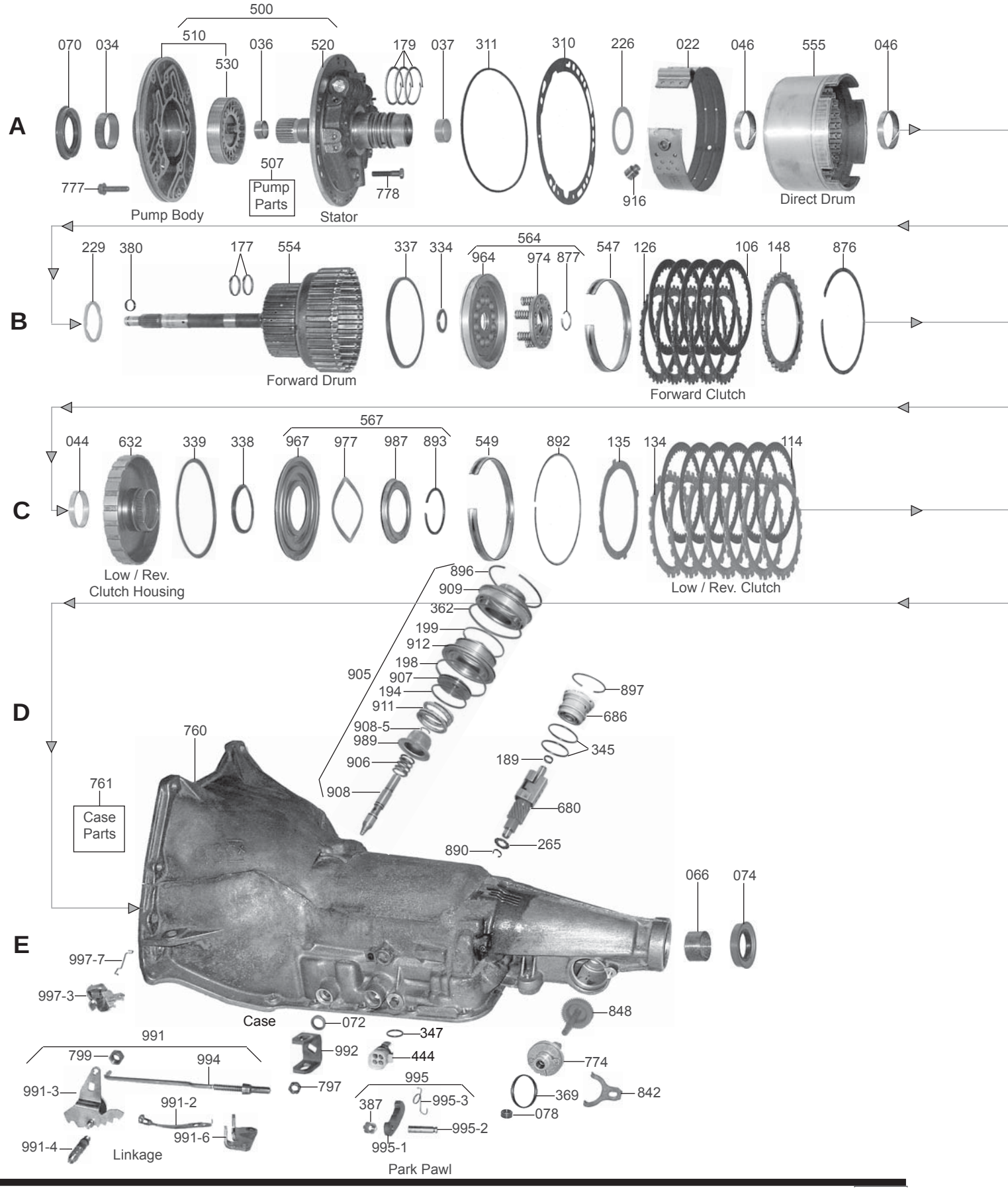

RWD 3 Speed

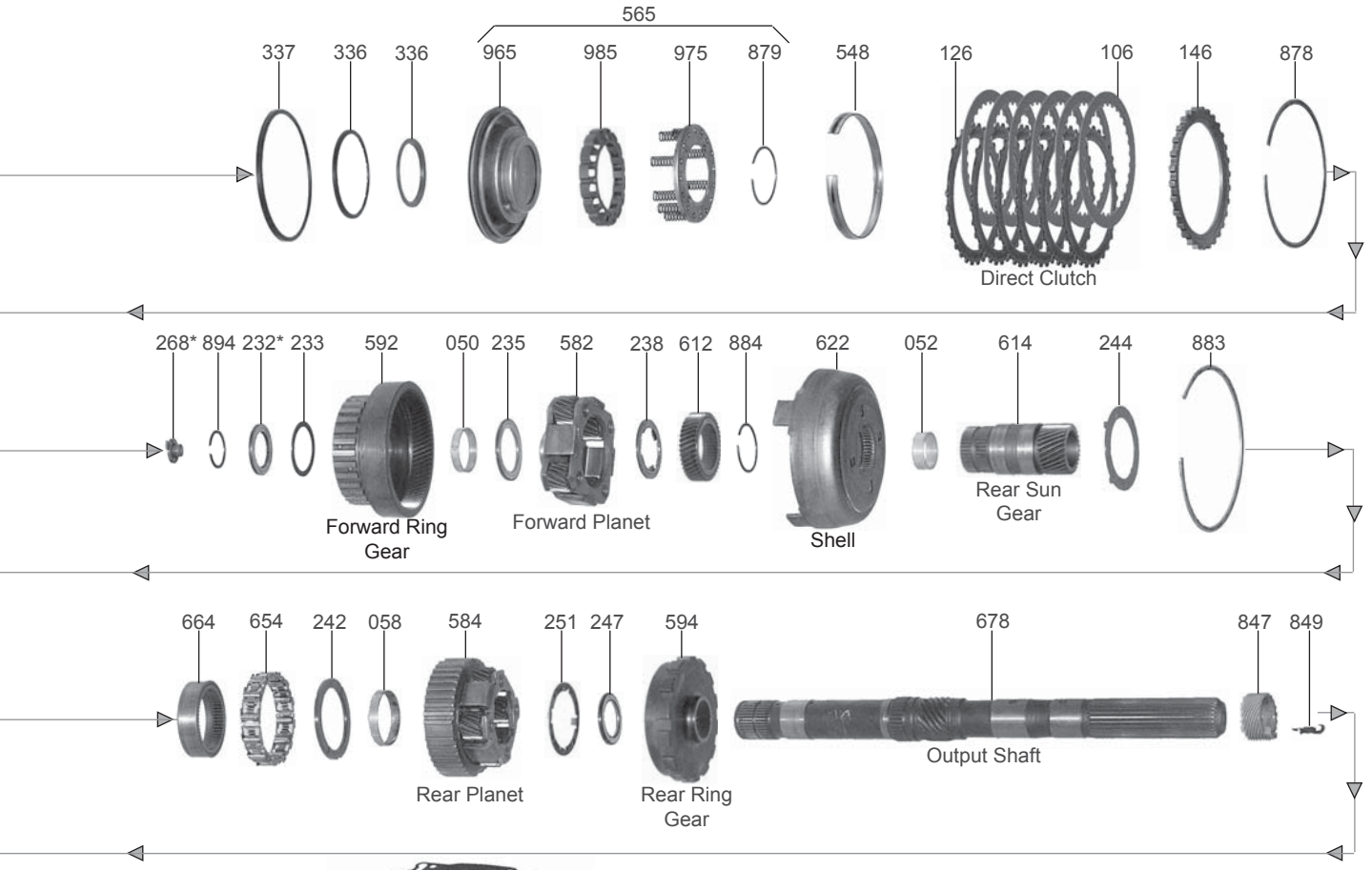
565
337
336
336
965
985
975
879
548
126
106
146
878
Direct Clutch
A
268*
894
232*
233
592
050
235
582
238
612
884
622
052
614
244
883
Forward Ring Gear
Forward Planet
Shell
Rear Sun Gear
B
664
654
242
058
584
251
247
594
678
847
849
Rear Planet
Rear Ring Gear
Output Shaft
C

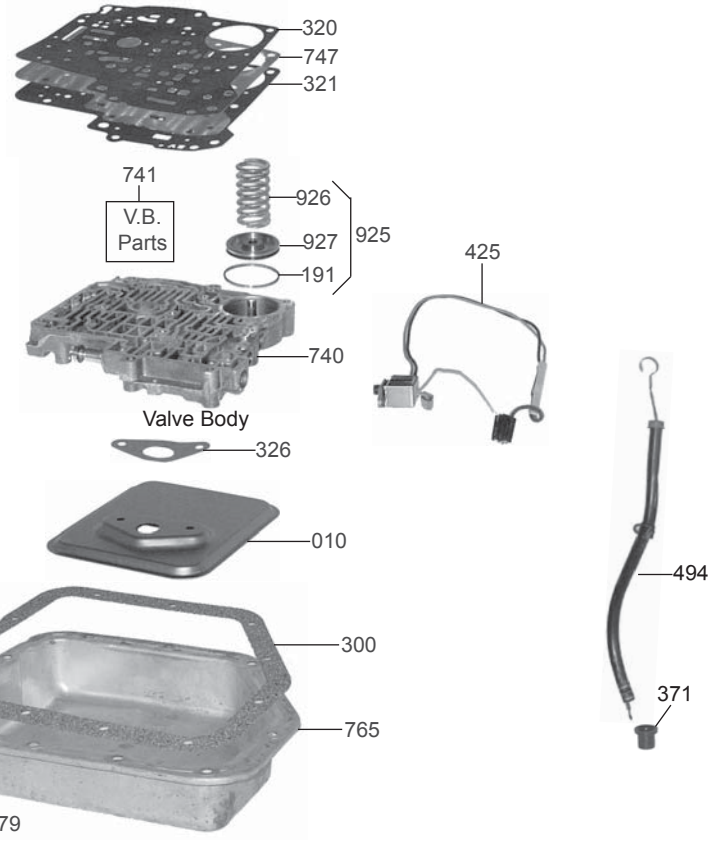
320
747
321
D
741
V.B. Parts
926
927
191
925
425
740
Valve Body
326
010
494
300
765
371
779
E

TH200-4R

RWD 4 Speed

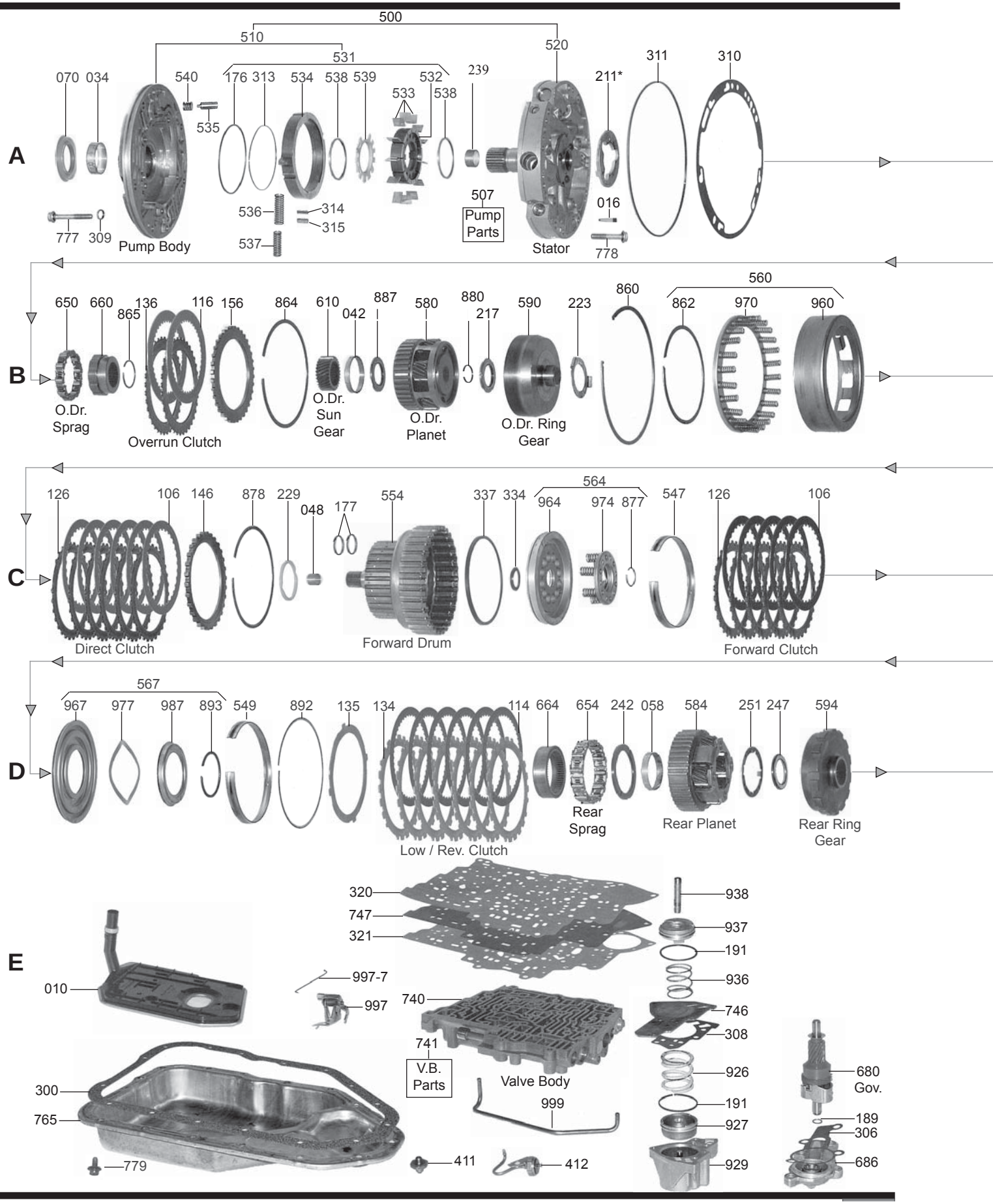

TH200-4R

RWD 4 Speed

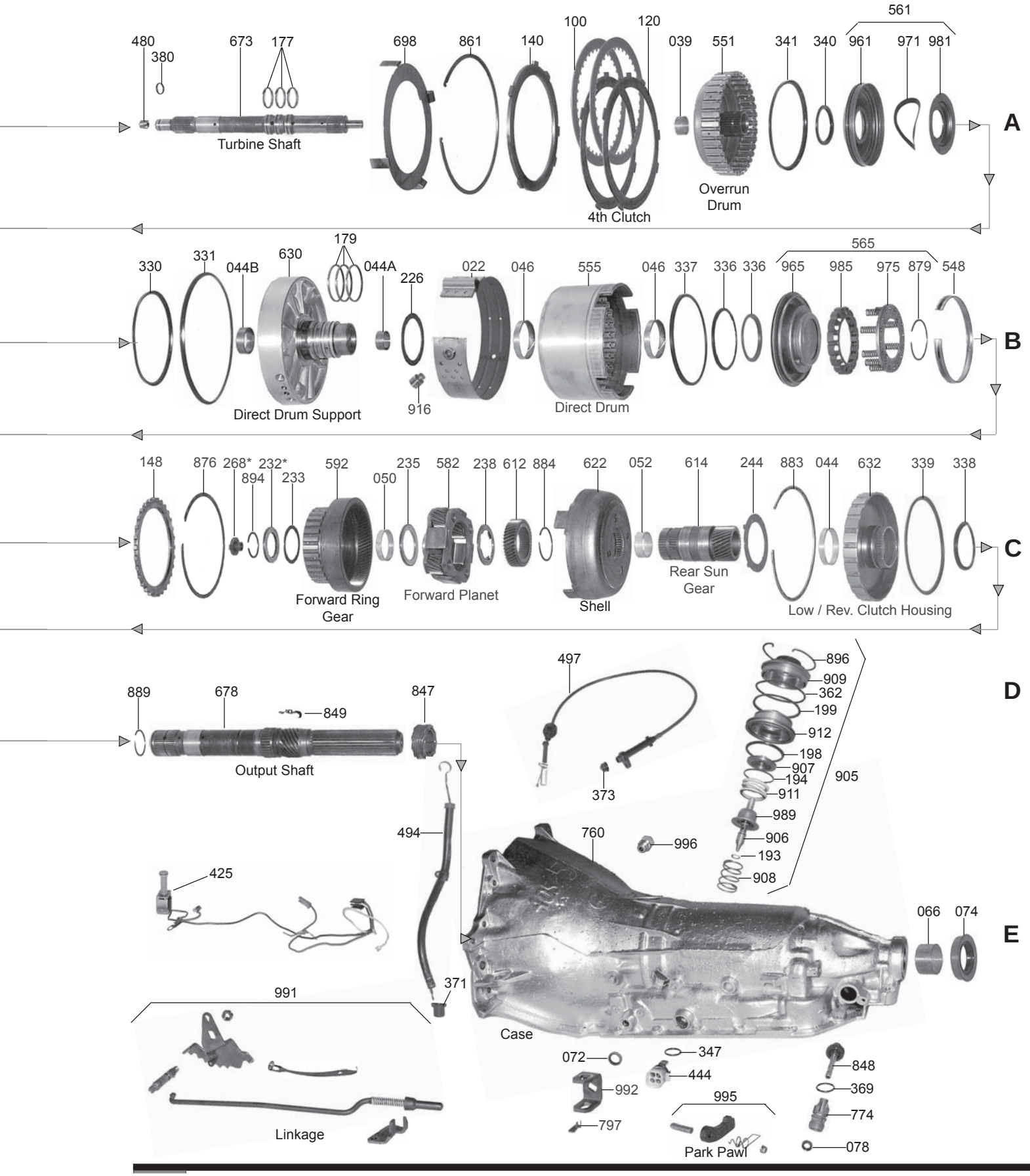

TH200/TH200C/TH200-4R

ILL#	PART#	DESCRIPTION	QTY	REF #
		PAPER & RUBBER KIT		
	K65900M-1	Paper & Rubber Kit, [TH200 / 200C] 1976-87	1	
	K65900D-1	Paper & Rubber Kit, [TH200-4R] 1981-90	1	
		OVERHAUL KIT		
	K65900M	Overhaul Kit, [TH200 / TH200C] 1976-87	1	
	K65900D	Overhaul Kit, [TH200-4R] 1981-90	1	
		MASTER L/STEEL KIT		
	DK6500M-S	Master L/Steels, [TH200 / TH200C] 1976-87	1	
	DK6500D-S	Master L/Steels, [TH200-4R] 1981-90	1	
		MASTER W/STEEL KIT		
	DK6500M	Master W/Steels, [TH200 / TH200C] 1976-87	1	
	DK6500D	Master W/Steels, [TH200-4R] 1981-90	1	
		FILTER		
010	65710	Filter, [TH200] (Brass) (Shallow Pan) 1976-E79	1	8628935
010	65710A	Filter, [TH200] (Nylon) (Deep Pan) L1979-87	1	8632949
010	65710B	Filter, [TH200-4R] 1981-90	1	8634223
		FILTER KIT		
	FK65710	Filter Kit, [TH200] (Brass) (Shallow Pan) 1976-E79	1	
	FK65710A	Filter Kit, [TH200] (Nylon) (Deep Pan) L1979-87	1	
	FK65710B	Filter Kit, [TH200-4R] 1981-90	1	
		MISC. FILTERS		
016	34665	Filter, [TH200-4R] (Pump Solenoid) (Tapered) 1981-90	1	8627509
		BANDS		
022	65700	Band, [TH200 / TH200C / TH200-4R] (Flex) (1.885” Wide) 1976-Up	1	8657210
022	RPS65700HP	Band, [TH200 / TH200C / TH200-4R] (Flex) (*PRO Series) 1976-Up	1	
022	65700K	Band, [TH200 / TH200C / TH200-4R] (Flex) (1.885” Wide) (Kevlar Lining) 1976-Up	1	
022	65700HP	Band, [TH200 / TH200C / TH200-4R] (Flex) (2.300” Wide) 1976-Up	1	
		BUSHINGS		
	K65901	Bushing Kit, [TH200 / TH200C] 1976-87	1	
	K65901D	Bushing Kit, [TH200-4R] 1981-90	1	
034	65005	Bushing, [TH200 / TH200C] (Pump Body) 1976-90	1	8649963
034	77005	Bushing, [TH200-4R] (Pump Body) 1976-90	1	
036	65002	Bushing, [TH200 / TH200C / TH200-4R] (Stator Support) (Front) 1976-90	1	8628915
037	65003	Bushing, [TH200 / TH200C] (Stator Support) (Rear) 1976-87	1	8628916
039	65010	Bushing, [TH200-4R] (Overrun Drum) 1981-90	1	8634908
042	75006	Bushing, [TH200-4R] (Overdrive Planet) 1981-90	1	
044	65006	Bushing, [TH200 / TH200C / TH200-4R] (Low / Reverse Clutch Housing) (Center Support) 1976-90	1	8628929
044A	65016	Bushing, [TH200-4R] (Direct Drum Support) (Rear) 1981-90	1	8634913
044B	65015	Bushing, [TH200-4R] (Direct Drum Support) (Front) 1981-90	1	8634907
046	65001	Bushing, [TH200 / TH200C] (Direct Drum) (Bronze) (Rear) (1.880”OD) 1976-87	1	8628917
046	65000	Bushing, [TH200 / TH200C] (Direct Drum) (Front) (2.110”OD) 1976-87	1	8628918

046	65013	Bushing, [TH200-4R] (Direct Drum) (Front) 1981-90	1	8634919
046	65001	Bushing, [TH200-4R] (Direct Drum) (Babbit) (Rear) 1981-90	1	8634917
048	65017	Bushing, [TH200-4R] (Forward Drum) (Pilot) 1981-90	1	8634925
050	65012	Bushing, [TH200 / TH200C / TH200-4R] (Front) (Ring Gear) 1976-90	1	8630990
052	65008	Bushing, [TH200 / TH200C / TH200-4R] (Rear) (Sun Gear) 1976-90	1	8628928
058	65009	Bushing, [TH200 / TH200C / TH200-4R] (Rear) (Planet) 1976-90	1	8628947
066	8008	Bushing, [TH200 / TH200C / TH200-4R] (Extension Housing) (Babbit) 1976-90	1	6260048
066	38004	Bushing, [TH200 / TH200C / TH200-4R] (Extension Housing) (Bronze) 1976-90	1	
		METAL CLAD SEALS		
070	65151	Seal, [TH200 / TH200C / TH200-4R] (Front) 1976-90	1	8657116
072	38511	Seal, [TH200 / TH200C / TH200-4R] (Linkage Shaft) 1976-90	1	8623056
074	8850B	Seal, [TH200 / TH200C / TH200-4R] (Rear) (With Flange) (No Boot) 1976-90	1	1243402
074	16695ES	Seal, [TH200 / TH200C / TH200-4R] (Rear) (With Flange) (With Short Boot) 1969-86	1	
075	35746Y-S	Seal, [TH200 / TH200C / TH200-4R] (Drive Shaft Yoke)	1	Teckpak
078	3991	Seal, [TH200 / TH200C / TH200-4R] (Speed-O Shaft) 1976-90	1	1240382
089	77991	Retainer, [TH200-4R] (Front) (Seal Lock) 1981-90	1	8654491
		FRICTION CLUTCH		
100	65106	Friction, [TH200-4R] (4th Clutch) (.080") 1981-90	2	8657170
100	65106HP	Friction, [TH200-4R] (4th Clutch) (.080") (Heavy Duty / Hi-Performance Red) 1981-90	2	
100	K65106HP	Friction Kit, [TH200-4R] (4th Clutch) (.080") (Hi-Performance) (2-Per Kit) 1981-90	1	
106	65103	Friction, [TH200 / TH200C / TH200-4R] (Forward & Direct Clutch) (.078") 1976-90	9-11	8657168
106	65103HP	Friction, [TH200 / TH200C / TH200-4R] (Forward & Direct Clutch) (.078") (Heavy Duty / Hi-Performance Red) 1976-90	9-11	
106	65103AHP	Friction, [TH200 / TH200C / TH200-4R] (Forward & Direct Clutch) (.061") (Hi-Performance) 1976-90	9-11	
106	K65103HP	Friction Kit, [TH200 / TH200C / TH200-4R] (Forward & Direct Clutch) (.078") (Hi-Performance Red) (5-Per Kit) 1976-90	1-2	
106	K65103AHP	Friction Kit, [TH200 / TH200C / TH200-4R] (Forward & Direct Clutch) (.061") (Heavy Duty / Hi-Performance Red)	1-2	
114	65102	Friction, [TH200 / TH200C / TH200-4R] (Low / Reverse Clutch) (.078") 1976-90	4-6	8669069
114	65102HP	Friction, [TH200 / TH200C / TH200-4R] (Low / Reverse Clutch) (.078") (Heavy Duty / Hi-Performance Red) 1976-90	4-6	
114	K65102HP	Friction Kit, [TH200 / TH200C / TH200-4R] (Low / Reverse Clutch) (.078") (Hi-Performance Red) (6-Per Kit) 1976-Up	1	
116	65107	Friction, [TH200-4R] (Overrun Clutch) (.080") 1981-90	2	8657031
116	65107HP	Friction, [TH200-4R] (Overrun Clutch) (.080") (Heavy Duty / Hi-Performance Red) 1981-90	2	
116	K65107HP	Friction Kit, [TH200-4R] (Overrun Clutch) (.080") (Hi-Performance Red) (2-Per Kit) 1981-90	1	
	K65100	Friction Module, [TH200 / TH200C] 1976-87	1	
	K65100D	Friction Module, [TH200-4R] 1981-90	1	
	K65100DHP	Friction Module, [TH200-4R] (High Performance Red)	1	
		STEEL CLUTCH		
120	65109	Steel, [TH200-4R] (4th Clutch) (.080") 1981-90	3	8634026
126	65100	Steel, [TH200 / TH200C / TH200-4R] (Direct Clutch) (.090") 1976-90	5-6	8628484
126	65104	Steel, [TH200 / TH200C / TH200-4R] (Forward Clutch) (.077") (Flat) 1976-90	5-6	8678902
126	65105	Steel, [TH200 / TH200C / TH200-4R] (Forward Clutch) (.060") (Waved) 1976-90	1	8678901
126	65105C	Steel, [TH200 / TH200C / TH200-4R] (Forward Clutch) (.060") (Flat) (Commercial) 1976-90	AR	
126	65100X	Steel, [TH200-4R] (Direct Clutch) (.100") (Oversize) 1981-90	AR	
126	65104X	Steel, [TH200 / TH200C] (Forward Clutch) (.088") (Oversize) 1976-90	AR	
134	65101	Steel, [TH200 / TH200C / TH200-4R] (Low / Reverse Clutch) (.076") 1976-90	6	8678922

TH200/TH200C/TH200-4R

134	65101X	Steel, [TH200 / TH200C / TH200-4R] (Low / Reverse Clutch) (.092") (Oversize) 1976-90	AR	
135	65108	Steel, [TH200 / TH200C / TH200-4R] (Low / Reverse Clutch) (.078") (Waved) 1976-90	1	8633371
136	65112	Steel, [TH200-4R] (Overrun Clutch) (.080") 1981-90	2	8634050
	K65110	Steel Module, [TH200 / TH200C] 1976-87	1	
	K65110D	Steel Module, [TH200-4R] 1981-90	1	
		CLUTCH PRESSURE PLATES		
140	65110	Pressure Plate, [TH200-4R] (4th Clutch) (Top) 1981-90	1	8634866
146	65716	Pressure Plate, [TH200 / TH200C] (Direct Clutch) (*Also [TH200 / TH200C / TH200-4R] (Forward Clutch) 1976-90	1-2	8678925
148	65716A	Pressure Plate, [TH200-4R] (Direct Clutch)	1	8628088
156	65113	Pressure Plate, [TH200-4R] (Overrun Clutch) 1981-90	1	8634052
		VALVE BODY KITS		
	K65908	Valve Body Kit, [TH200] 1976-78	1	Transgo
	K65908A	Valve Body Kit, [TH200 / TH200C] 1979-87	1	Transgo
	K65908A-S	Valve Body Kit, [TH200 / TH200C] 1976-87	1	Superior
	K65908R	Valve Body Kit, [TH200-4R] 1981-90	1	Transgo
	K65908R-S	Valve Body Kit, [TH200-4R] 1981-90	1	Superior
	K65908RSHP	Valve Body Kit, [TH200-4R] (With Steel Boost Valve & Sleeve) 1981-90	1	Superior
	K77877	Pump Ring Kit, [TH200-4R] (No Yo-Yo) 1981-90	1	Transgo
	K77877R	Pump Ring Kit, [TH200-4R] (No Yo-Yo) (Hi-Performance) 1981-90	1	Transgo
	200-4R-HD2	Valve Body Kit, [TH200-4R] (Crisp to Full Race) 1981-90	1	Transgo
	K65908RSHD	Valve Body Kit, [TH200-4R] (Hi-Performance) 1981-90	1	Superior
		OIL SEALING RINGS		
	K65903R	Ring Kit, [TH200 / TH200C] (Metal) 1976-87	1	
	K65903T	Ring Kit, [TH200 / TH200C] (Teflon) 1976-87	1	
	K65903D	Ring Kit, [TH200-4R] (13 Teeth) (3-Seal Plated Metal) 1981-90	1	
176	65321	Ring, [TH200-4R] (Pump Slide) (Metal) 1981-90	1	8634079
177	65301	Ring, [TH200 / TH200C / TH200-4R] (Turbine Shaft & Forward Drum Shaft) (Metal) 1976-90	2-4	8628090
177	65301T	Ring, [TH200 / TH200C / TH200-4R] (Turbine Shaft & Forward Drum Shaft) (Teflon) (Scarf Cut) 1976-90	2-4	8628090
177	65301T-S	Ring, [TH200-4R] (Turbine Shaft) (Teflon) (Solid) 1981-90	1	8634598
179	65300T	Ring, [TH200 / TH200C / TH200-4R] (Stator) (Teflon) 1976-87	3	8628055
179	65320	Ring, [TH200-4R] (Direct Drum Support) (Metal) 1981-90	3	8634156
189	65309T	Ring, [TH200 / 200C] (Governor) (Teflon) 1976-87	1	8633455
189	65309J	Ring, [TH200-4R] (Governor) (Teflon) 1981-90	1	8632588
191	65302	Ring, [TH200 / TH200C] (Accumulator) (Metal) 1976-87	1	8634161
191	65302T	Ring, [TH200 / TH200C] (Accumulator) 1976-87 (*Also [TH200-4R] (3-4 Accumulator) (Teflon) 1981-90	1-2	8634161
191	65322T	Ring, [TH200-4R] (1-2 Accumulator) (Teflon) 1981-90	1	8634390
352	65128	Lathe Cut Seal, [TH200-4R] (1-2 Accumulator) 1981-90	1	
354	65128	Lathe Cut Seal, [TH200-4R] (3-4 Accumulator) 1981-90	1	8635568
193	65179	Ring, [TH200 / TH200C / TH200-4R] (Intermediate Servo Pin) (Teflon) 1976-90	1	8630120
194	65310	Ring, [TH200 / TH200C] (Intermediate Servo Piston) (Inner) (2.79") (Metal) 1976-87	1	8631473
194	65310T	Ring, [TH200 / TH200C] (Intermediate Servo Piston) (Inner) (2.79") (Teflon) 1976-87	1	8631473
194	65311	Ring, [TH200 / TH200C / TH200-4R] (Intermediate Servo Piston) (Center) (2.28") (Metal) 1976-90	1	8632150
194	65311T	Ring, [TH200 / TH200C / TH200-4R] (Intermediate Servo Piston) (Center) (2.28") (Teflon) 1976-90	1	8632150
194	65312	Ring, [TH200 / TH200C] (Intermediate Servo Piston) (Center) (1.96") (Metal) 1976-87	1	8630568

194	65312T	Ring, [TH200 / TH200C] (Intermediate Servo Piston) (Center) (1.96") (Teflon) 1976-87	1	8630568
194	65313	Ring, [TH200 / TH200C] (Intermediate Servo Piston) (Center) (2.15") (Metal) 1976-87	1	8632149
195	65313T	Ring, [TH200 / TH200C] (Intermediate Servo Piston) (Center) (2.15") (Teflon) 1976-87	1	8632149
194	65314	Ring, [TH200 / TH200C / TH200-4R] (Intermediate Servo Piston) (Inner) (2.41") (Metal) 76-90	1	8632151
194	65314T	Ring, [TH200 / TH200C / TH200-4R] (Intermediate Servo Piston) (Inner) (2.41") (Teflon) 1976-90	1	8632151
198	65303	Ring, [TH200 / TH200C / TH200-4R] (Intermediate Servo Piston) (Outer) (Large) (Metal) 1976-90	1	8628123
198	65303T	Ring, [TH200 / TH200C / TH200-4R] (Intermediate Servo Piston) (Outer) (Large) (Teflon) 1976-90	1	8628123
361	3257	Lip Seal, [TH200 / TH200C / TH200-4R] (Servo) (64.5mm) (Outer) 1976-90	1	
361	K65900-4	Lip Seal Set, [TH200 / TH200C / TH200-4R] (Servo) 1976-90	1	
199	65305	Ring, [TH200 / TH200C / TH200-4R] (Intermediate Servo Piston) (Inner) (2.67") (Small) (Metal) 1976-90	1	8628124
199	65305T	Ring, [TH200 / TH200C / TH200-4R] (Intermediate Servo Piston) (Inner) (2.67") (Small) (Teflon) 1976-90	1	8628124
199	65306	Ring, [TH200 / TH200C] (Intermediate Servo Piston) (Inner) (2.35") (Small) (Metal) 1976-87	1	8628697
199	65306T	Ring, [TH200 / TH200C] (Intermediate Servo Piston) (Inner) (2.35") (Small) (Teflon) 1976-87	1	8628697
199	65307	Ring, [TH200 / TH200C / TH200-4R] (Intermediate Servo Piston) (Inner) (2.89") (Small) (Metal) 1976-90	1	8628125
199	65307T	Ring, [TH200 / TH200C / TH200-4R] (Intermediate Servo Piston) (Inner) (2.89") (Small) (Teflon) 1976-90	1	8628125
199	65308	Ring, [TH200 / TH200C] (Intermediate Servo Piston) (Inner) (2.53") (Small) (Metal) 1976-87	1	8630080
199	65308T	Ring, [TH200 / TH200C] (Intermediate Servo Piston) (Inner) (2.53") (Small) (Teflon) 1976-87	1	8630080
538	65925S	Ring, [TH200-4R] (Pump Vane) (Steel) 1981-90	2	8657692
		WASHERS & BEARINGS		
	K65907	Washer Kit, [TH200 / TH200C] (Without Selectives) 1976-87	1	
	K65907A	Washer Kit, [TH200 / TH200C / TH200-4R] (Forward Drum to Hub) (Selective) 1976-90	1	
	K65907C	Washer Kit, [TH200 / TH200C / TH200-4R] (Forward Drum to Output Shaft) (Selective) 76-90	1	
	K65907D	Washer Kit, [TH200-4R] (Without Selectives) 1981-90	1	
	K65907B	Bearing Kit, [TH200 / TH200C] 1976-87	1	
	K65907E	Bearing Kit, [TH200-4R] 1981-90	1	
211	65420	Washer, [TH200-4R] (Stator) (.169") (#1) 1981-90	1	8634120
211	65420A	Washer, [TH200-4R] (Stator) (.174") (#2) 1981-90	1	8634121
211	65420B	Washer, [TH200-4R] (Stator) (.178") (#3) 1981-90	1	8634122
211	65420C	Washer, [TH200-4R] (Stator) (.184") (#4) 1981-90	1	8634123
211	65420D	Washer, [TH200-4R] (Stator) (.188") (#5) 1981-90	1	8634124
211	65420E	Washer, [TH200-4R] (Stator) (.193") (#6) 1981-90	1	8634125
211	65420F	Washer, [TH200-4R] (Stator) (.198") (#7) 1981-90	1	8634386
211	65420G	Washer, [TH200-4R] (Stator) (.202") (#8) 1981-90	1	8634387
211	65420H	Washer, [TH200-4R] (Stator) (.207") (#9) 1981-90	1	8634388
217	65422	Bearing, [TH200-4R] (Overdrive Planet to Overdrive Ring Gear) 1981-90	1	8634035
223	65425	Washer, [TH200-4R] (Overdrive Ring Gear to Direct Drum Support) 1981-90	1	8634146
226	65400	Washer, [TH200 / TH200C] (Pump to Direct Drum) 1976-87	1	8628056
226	65426	Washer, [TH200-4R] (Direct Drum Support to Direct Drum) 1981-90	1	8634157
229	65401	Washer, [TH200 / TH200C / TH200-4R] (Direct Drum to Forward Drum) 1976-90	1	8628091
232	65403J	Washer, [TH200 / TH200C / TH200-4R] (Forward Drum to Hub) (.100") (#10) 1976-90	1	
232	65403	Washer, [TH200 / TH200C / TH200-4R] (Forward Drum to Hub) (.117") (#1) 1976-90	1	8630891
232	65403A	Washer, [TH200 / TH200C / TH200-4R] (Forward Drum to Hub) (.124") (#2) 1976-90	1	8630892
232	65403B	Washer, [TH200 / TH200C / TH200-4R] (Forward Drum to Hub) (.131") (#3) 1976-90	1	8630893

TH200/TH200C/TH200-4R

232	65403C	Washer, [TH200 / TH200C / TH200-4R] (Forward Drum to Hub) (.138") (#4) 1976-90	1	8630894
232	65403D	Washer, [TH200 / TH200C / TH200-4R] (Forward Drum to Hub) (.145") (#5) 1976-90	1	8630895
232	65403E	Washer, [TH200 / TH200C / TH200-4R] (Forward Drum to Hub) (.152") (#6) 1976-90	1	8630896
232	65403F	Washer, [TH200 / TH200C / TH200-4R] (Forward Drum to Hub) (.159") (#7) 1976-90	1	8630897
232	65403G	Washer, [TH200 / TH200C / TH200-4R] (Forward Drum to Hub) (.166") (#8) 1976-90	1	8630898
232	65403H	Washer, [TH200 / TH200C / TH200-4R] (Forward Drum to Hub) (.173") (#9) 1976-90	1	8630899
233	65404	Washer, [TH200 / TH200C / TH200-4R] (Forward Hub to Spacer) 1976-90	1	8628765
235	65405	Bearing, [TH200 / TH200C / TH200-4R] (Front) (Planet to Hub) 1976-90	1	8628202
238	65406	Bearing, [TH200 / TH200C / TH200-4R] (Front) (Planet to Sun Gear) 1976-90	1	8633875
242	65408	Washer, [TH200 / TH200C / TH200-4R] (Rear) (Planet to Sprag Race) 1976-90	1	8628182
242	65408A	Bearing, [TH200 / TH200C / TH200-4R] (Rear) (Planet to Sprag Race) 1976-90	1	8648389
244	65407A	Washer, [TH200 / TH200C / TH200-4R] (Shell to Low / Reverse Clutch Housing) (.060") (Plastic) 1976-90	1	8628766
244	65407B	Washer, [TH200 / TH200C / TH200-4R] (Shell to Low / Reverse Clutch Housing) (.080") (Plastic) 1976-90	1	
244	34501A	Washer, [TH200 / TH200C / TH200-4R] (Shell to Low / Reverse Clutch Housing) (Metal) 1976-90	1	8628549
247	65409	Bearing, [TH200 / TH200C / TH200-4R] (Sun Gear to Rear Ring Gear) 1976-90	1	8628962
251	65415	Washer, [TH200 / TH200C / TH200-4R] (Rear) (Planet to Rear Ring Gear) 1976-90	1	8628188
266	65416	Washer, [TH200 / TH200C / TH200-4R] (Driven Governor Gear to Case) 1976-90	1	8628584
268	65402	Washer, [TH200 / TH200C / TH200-4R] (Forward Drum to Output Shaft) (.068") (#1) 1976-90	1	8639291
268	65402A	Washer, [TH200 / TH200C / TH200-4R] (Forward Drum to Output Shaft) (.073") (#2) 1976-90	1	8639292
268	65402B	Washer, [TH200 / TH200C / TH200-4R] (Forward Drum to Output Shaft) (.078") (#3) 1976-90	1	8639293
268	65402C	Washer, [TH200 / TH200C / TH200-4R] (Forward Drum to Output Shaft) (.083") (#4) 1976-90	1	8639294
268	65402D	Washer, [TH200 / TH200C / TH200-4R] (Forward Drum to Output Shaft) (.088") (#5) 1976-90	1	8639295
268	65402E	Washer, [TH200 / TH200C / TH200-4R] (Forward Drum to Output Shaft) (.093") (#6) 1976-90	1	8639296
268	65402F	Washer, [TH200 / TH200C / TH200-4R] (Forward Drum to Output Shaft) (.098") (#7) 1976-90	1	8639297
268	65402G	Washer, [TH200 / TH200C / TH200-4R] (Forward Drum to Output Shaft) (.103") (#8) 1976-90	1	8639298
268	65402H	Washer, [TH200 / TH200C / TH200-4R] (Forward Drum to Output Shaft) (.108") (#9) 1976-90	1	8639299
268	65402J	Washer, [TH200 / TH200C / TH200-4R] (Forward Drum to Output Shaft) (.113") (#10) 1976-90	1	8639300
268	65402K	Washer, [TH200 / TH200C / TH200-4R] (Forward Drum to Output Shaft) (.118") (#11) 1976-90	1	8639301
268	65402L	Washer, [TH200 / TH200C / TH200-4R] (Forward Drum to Output Shaft) (.123") (#12) 1976-90	1	8639302
268	65402M	Washer, [TH200 / TH200C / TH200-4R] (Forward Drum to Output Shaft) (.128") (#13) 1976-90	1	8639303
268	65402N	Washer, [TH200 / TH200C / TH200-4R] (Forward Drum to Output Shaft) (.133") (#14) 1976-90	1	8639304
268	65402P	Washer, [TH200 / TH200C / TH200-4R] (Forward Drum to Output Shaft) (.138") (#15) 1976-90	1	8639305
		GASKETS & RUBBER COMPONENTS		
300	65500	Gasket, [TH200 / TH200C] (Pan) 1976-87	1	8633380
300	65502	Gasket, [TH200-4R] (Pan) 1981-90	1	8634198
306	65541	Gasket, [TH200-4R] (Governor Cover) 1981-90	1	8634477
308	65542	Gasket, [TH200-4R] (Accumulator Housing to Plate) 1981-90	1	8634166
309	13268A	Gasket, [TH200 / TH200C / TH200-4R] (Pump Bolt) 1976-90	6	8626281
310	65531A	Gasket, [TH200 / TH200C] (Pump to Case) 1976-87	1	8633899
310	65534	Gasket, [TH200-4R] (Pump to Case) 1981-90	1	8634047
311	65532	O-Ring, [TH200 / TH200C] (Pump) 1976-87	1	8628052
311	65533	O-Ring, [TH200-4R] (Pump) 1981-90	1	8634046
313	65174	O-Ring, [TH200-4R] (Pump Slide) 1981-90	1	8634088
314	65170	Seal, [TH200-4R] (Pump Slide) (Rubber) 1981-90	1	8631283
315	65180	Seal, [TH200-4R] (Pump Slide) (Teflon) 1981-90	1	8631877
320	65538	Gasket, [TH200] (Valve Body) (Upper) 1976-78	1	8630445
320	65538A	Gasket, [TH200C] (Valve Body) (Upper) 1979-87	1	8633624

320	65540	Gasket, [TH200-4R] (Valve Body) (Upper) 1981-90	1	8634653
321	65537	Gasket, [TH200] (Valve Body) (Lower) 1976-78	1	8628870
321	65537A	Gasket, [TH200C] (Valve Body) (Lower) 1979-87	1	8633623
321	65539	Gasket, [TH200-4R] (Valve Body) (Lower) 1981-90	1	8634654
326	65535	Gasket, [TH200 / TH200C] (Filter) 1979-87	1	8628300
328	3205	O-Ring, [TH200C] (Lock/Up Solenoid) 1978-87	1	8630052
328	13503	O-Ring, [TH200-4R] (Lock/Up Solenoid) 1981-90	1	8630049
330	65575	Lip Seal, [TH200-4R] (4th Clutch) (Inner) 1981-90	1	8635562
331	65574	Lip Seal, [TH200-4R] (4th Clutch) (Outer) 1981-90	1	8634024
334	65564	Lip Seal, [TH200 / TH200C / TH200-4R] (Forward Clutch Piston) (Inner) 1976-90	1	8630102
336	65562	Lip Seal, [TH200 / TH200C / TH200-4R] (Direct Clutch Piston) (Inner) 1976-90	1	8628079
336	65561	Lip Seal, [TH200 / 200C / 200-4R] (Direct Clutch Piston) (Center) 1976-90	1	8630295
337	65560	Lip Seal, [TH200 / TH200C / TH200-4R] (Forward & Direct Clutch Piston) (Outer) 1976-90	2	8628078
338	65556	Lip Seal, [TH200 / TH200C / TH200-4R] (Low / Reverse Clutch Piston) (Inner) 1976-90	1	8628246
339	65565	Lip Seal, [TH200 / TH200C / TH200-4R] (Low / Reverse Clutch Piston) (Outer) 1976-90	1	8628364
340	65573	Lip Seal, [TH200-4R] (Overrun Clutch Piston) (Inner) 1981-90	1	8634054
341	65572	Lip Seal, [TH200-4R] (Overrun Clutch Piston) (Outer) 1981-90	1	8634053
345	3131	O-Ring, [TH200 / TH200C] (Governor Cover) (Outer) 1976-87	1	8628955
345	3820	O-Ring, [TH200 / TH200C] (Governor Cover) (Inner) 1976-87	1	8628248
352	65128	Lathe Cut Seal, [TH200-4R] (1-2 Accumulator) 1981-90	1	
354	65128	Lathe Cut Seal, [TH200-4R] (3-4 Accumulator) 1981-90	1	8635568
361	3257	Lip Seal, [TH200 / TH200C / TH200-4R] (Servo) (Outer) 1976-90	1	8639616
361	3256A	Lip Seal, [TH200 / TH200C / TH200-4R] (Servo) (51mm) (Inner) 1976-90	1	8639782
361	3256B	Lip Seal, [TH200 / TH200C / TH200-4R] (Servo) (55mm) (Inner) 1976-90	1	8639783
361	3256C	Lip Seal, [TH200 / TH200C / TH200-4R] (Servo) (57mm) (Inner) 1976-90	1	8639784
361	K65900-4	Lip Seal Set, [TH200 / TH200C / TH200-4R] (Servo) 1976-90	1	
362	3256	O-Ring, [TH200 / TH200C / TH200-4R] (Servo Cover) 1976-87	1	8628136
336	3410	O-Ring, [TH200 / TH200C / TH200-4R] (Speed-O Sleeve) 1976-87	1	1240382
369	3126	O-Ring, [TH200 / TH200C / TH200-4R] (Speed-O Sleeve) (*BPO Case Only) 1976-87	1	
369	3718	O-Ring, [TH200-4R] (Speed-O Housing) 1982-Up	1	
371	3291	O-Ring, [TH200 / TH200C / TH200-4R] (Filler Tube) 1969-79	1	6264902
371	3292	Boot, [TH200C / TH200-4R] (Filler Tube) 1980-86	1	1259475
373	3566	O-Ring, [TH200 / TH200C / TH200-4R] (Detent) 1976-90	1	358424
373	13582	Boot, [TH200 / TH200C / TH200-4R] (Detent) 1976-90	1	25518260
379	77547	Seal, [TH200-4R] (Filter) 1982-92	1	
380	13503	O-Ring, [TH200 / TH200C / TH200-4R] (Input Shaft) 1976-90	1	8630049
380	13503A	O-Ring, [TH200C] (Turbine Shaft) (Goes Behind Splines) (4 & 6 Cylinder Type) 1982-Up	1	8662686
386	65167	Cup Plug Seal, [TH200 / TH200C / TH200-4R] (Low / Reverse Clutch Housing) 1976-90	1	8631577
	K65900-2	External Seal Kit, [TH200 / TH200C] 1976-Up	1	
	K65900D-2	External Seal Kit, [TH200-4R] 1981-90	1	
		TECHNICAL MANUALS		
	TM200/C	Manual, [TH200C] (Technical) 1979-87	1	ATSG
	TM200-4R	Manual, [TH200-4R] (Technical) 1981-90	1	ATSG
		ELECTRICAL COMPONENTS		
411	65660	Switch, [TH200C] (3rd Clutch) (Pressure) (With Tube) 1983-87	1	24200843
411	65618	Switch, [TH200-4R] (4th Clutch) (Pressure) (1-Prong) (Closed) 1981-90	1	8683502
412	65618A	Switch, [TH200-4R] (Pressure) (2-Prong) 1981-90	1	8643710
416	35650	Switch, [TH200C / TH200-4R] (Lock/Up Delay) (50 PSI) 1981-90	1	8635869

TH200/TH200C/TH200-4R

416	35654	Switch, [TH200C / TH200-4R] (Lock/Up Delay) (54 PSI) 1981-90	1	
416	35640A	Switch, [TH200C / TH200-4R] (Governor) (36-40 PSI) 1979-90	1	8648062
416	35646	Switch, [TH200C / TH200-4R] (Governor) (46 PSI) 1979-90	1	8648063
416	65663	Switch, [TH200-4R] (4-3 Pressure Switch) (With Tube) 1981-90	1	8634463
416	65653	Switch, [TH200-4R] (4-3 Pressure Switch) (With Tube) (2-Prong) 1981-90	1	8634853
416	35648	Switch, [TH200C / TH200-4R] (Governor) (48 PSI) 1979-90	1	8648064
416	35650	Switch, [TH200C / TH200-4R] (Governor) (50 PSI) 1979-90	1	8648065
416	35652	Switch, [TH200C / TH200-4R] (Governor) (52 PSI) 1979-90	1	8648066
416	35654	Switch, [TH200C / 200-4R] (Governor) (54 PSI) 1979-90	1	8648067
425	K84856R	Solenoid, [TH200C] (TCC) (Universal) 1979-87	1	Rostra
425	K84856U	Solenoid, [TH200C] (Lock-Up)	1	Teckpak
425	65610A	Solenoid, [TH200C] (TCC) (With Closed Loop) 1979-87	1	8633945
425	65610F	Solenoid, [TH200C] (TCC) (3-Wire) 1979-87	1	8633946
425	65610E	Solenoid, [TH200C] (TCC) (PT, 1G2, With Gear) 1979-87	1	8633947
425	65610G	Solenoid, [TH200C] (TCC) (PT, 1G2, With 3) 1979-87	1	8638931
425	K77929R	Solenoid, [TH200-4R] (TCC) (Universal) 1981-90	1	Rostra
425	65911A	Solenoid, [TH200-4R] (TCC) (With 259, 262, 305, 307) 1982-86	1	8634967
425	65961A	Solenoid, [TH200-4R] (TCC) (With 231 Clutch) (V-6) 1984-86	1	8639900
425	65961B	Solenoid, [TH200-4R] (TCC) (With 305 Clutch) (V-8) 1984-86	1	8639901
425	65961	Solenoid, [TH200-4R] (TCC) (With 350 N) 1984-86	1	8634961
425	65961-01K	Snout With O-Ring, [TH200-4R] (TCC Solenoid) (Aluminum)	1	Sonnax
434	65620	Switch, [TH200C] (TCC Vacuum Control) (On Engine) 1979-Up	1	14014519
442	K77912	Universal Adjustment Vacuum Switch, [TH200-4R] (1" to 6" of Vaccum)	1	Superior
442	K77912A	Universal Adjustment Vaccum Switch, [TH200-4R] (6" to 22" of Vaccum)	1	Superior
444	65609	Connector, [TH200C] (Case) (2-Prong) 1979-Up	1	12300205
444	84983	Connector, [TH200C / TH200-4R] (Case) (4-Prong) (Square)	1	8662395
444	77983	Connector, [TH200C / TH200-4R] (Case) (3-Prong) 1979-Up	1	8634383
		MISC. COMPONENTS		
480	77734B	Ball & Capsule, [TH200-4R] (Input Drum) 1981-90	1	8685839
480	77978	Ball & Capsule, [TH200-4R] (In Case by Servo) 1981-90	1	8634400
483	65168	Cup Plug, [TH200 / TH200C] (Park Pawl) 1976-87	1	8620318
483	65168A	Cup Plug, [TH200 / TH200C / TH200-4R] (Turbine Shaft) (Rear) 1976-90	1	8628145
487	35802	Grommet, [TH200 / TH200C / TH200-4R] (Shift Lever) (Black) (Oval) 1976-Up	1	
489	K35803U	Dust Cover, [TH200 / TH200C / TH200-4R] (Universal) 1976-Up	1	Teckpak
490	35910	Vent, [TH200 / TH200C / TH200-4R] (Case) (Front) (Plastic) 1978-90	1	8633408
497	AS1-01K	Detent Cable End, [TH200C / TH200-4R] (Teardrop Style Connector) (*This Is the OE Style) (No Slot) **(*Cable must be Recrimped)**	1	Sonnax
494	K35999U	Filler Tube & Dip Stick Kit, [TH200 / TH200C / TH200-4R / 350 / 400] (*Fitz All) 1976-Up	1	Teckpak
497	K77978	Detent Cable, [TH200C / TH200-4R] (Overall Length 45")	1	Teckpak
497	K65940U	Detent Cable, [TH200 / TH200C / TH200-4R] (Universal) 1976-Up	1	Teckpak
		HARD PARTS		
500	65912	Pump, [TH200] (Complete) 1976	1	
500	65912A	Pump, [TH200] (Complete) 1977-78	1	
500	65912B	Pump, [TH200C] (Complete) (Body Cast # 527) (Stator Cast # 414 or 536) 1979-87	1	
500	65912D	Pump, [TH200] (Complete) 1979-80	1	
500	65912C	Pump, [TH200] (Complete) (Chevette)	1	
500	65912E	Pump, [TH200C] (Complete) (Body Cast # 159) (Stator Cast # 149) 1979-87	1	
500	65914	Pump, [TH200-4R] (Complete) (Body Cast # 149) (Stator Cast # 150)	1	

500	65914A	Pump, [TH200-4R] (Complete) (Body Cast # 082 or 690) (Stator Cast # 088)	1	
		PUMP COMPONENTS		
089	77991	Retainer, [TH200-4R] (Front) (Seal Lock) 1981-90	1	8654491
176	65321	Ring, [TH200-4R] (Pump Slide) (Metal) 1981-90	1	8634079
313	65174	O-Ring, [TH200-4R] (Pump Slide) 1981-90	1	
314	65170	Seal, [TH200-4R] (Pump Slide) (Rubber) 1981-90	1	8631283
315	65180	Seal, [TH200-4R] (Pump Slide) (Teflon) 1981-90	1	8631877
507	K65877	Valve Kit, [TH200C] (Lock-Up Valve) 1979-87	1	Transgo
507	65805	Stop, [TH200-4R] (Lock-Up Valve) 1981-90	1	8634705
507	77696G	Spring, [TH200-4R] (Pressure Regulator Valve) (Green) 1981-90	1	8639164
507	65912-01K	Valve Kit, [TH200 / TH200C] (Pressure Regulator) (With O-Rings & End Plug)	1	Sonnax
507	65918	Valve, [TH200-4R] (Pressure Regulator) 1981-90	1	8684048
507	77696	Spring, [TH200-4R] (Pressure Regulator) 1981-90	1	8634490
507	K77898	Valve & Sleeve Assembly, [TH200-4R] (Reverse Boost) (O-Ring Style)	1	Sonnax
507	K77898A	Valve & Sleeve Assembly, [TH200-4R] (Reverse Boost) (Factory Style)	1	Sonnax
507	77917-04K	Valve & Sleeve Assembly, [TH200-4R] (TV Boost) (.500”OD) (Factory Style)	1	Sonnax
507	77917-500	Valve & Sleeve, [TH200-4R] (TV Boost) (.500”OD Valve) (O-Ring Type) 1981-90	1	Sonnax
507	77917-03K	Valve & Sleeve Assembly, [TH200-4R] (TV Boost) (.471”OD) (Factory Style)	1	Sonnax
507	77917-471	Valve & Sleeve, [TH200-4R] (TV Boost) (.471”OD Valve) (O-Ring Type) 1981-90	1	Sonnax
507	77917-02K	Valve & Sleeve Assembly, [TH200-4R] (TV Boost) (.423”OD) (Factory Style)	1	Sonnax
507	77917-01K	Valve & Sleeve Assembly, [TH200-4R] (TV Boost) (.423”OD) (O-Ring Type)	1	Sonnax
529	65917S	Shaft, [TH200-4R] (Stator Tube) 1981-90	1	
		HARD PARTS (Continued)		
510	65916	Pump Body, [TH200] 1976	1	
510	65916A	Pump Body, [TH200] 1977-78	1	
510	65916B	Pump Body, [TH200C] (Cast # 527) 1979-87	1	8636922
510	65916C	Pump Body, [TH200] 1979-80	1	
510	65916D	Pump Body, [TH200C] (Cast # 159) 1979-87	1	
510	65919	Pump Body, [TH200-4R] (Cast # 149) 1981-82	1	
510	65919A	Pump Body, [TH200-4R] (Cast # 082 or 690) 1982-90	1	
520	65913	Pump Stator, [TH200] 1976	1	
520	65913A	Pump Stator, [TH200] (No Vent) E1977	1	
520	65915	Pump Stator, [TH200] (With Vent) L1977-79	1	
520	65915A	Pump Stator, [TH200C] (Cast # 414 or 536) 1979-87	1	
520	65915B	Pump Stator, [TH200] (Chevette)	1	
520	65915C	Pump Stator, [TH200] (Cast # 738) (With Vent) 1979-80	1	
520	65203A	Pump Stator, [TH200C] (Cast # 149) 1979-87	1	8633958
520	65917	Pump Stator, [TH200-4R] (Cast # 150) 1981-82	1	
520	65917A	Pump Stator, [TH200-4R] (Cast # 088) 1982-90	1	8634493
530	K65201	Pump Gear Set, [TH200] (.676) 1976-78	1	
530	K65201A	Pump Gear Set, [TH200] (.677”) 1976-78	1	
530	K65201B	Pump Gear Set, [TH200] (.678”) 1976-78	1	
530	K65201C	Pump Gear Set, [TH200C] (.776) 1979-89	1	
530	K65201D	Pump Gear Set, [TH200] (.777”) 1979-89	1	
530	K65201E	Pump Gear Set, [TH200C] (.778”) 1979-87	1	

TH200/TH200C/TH200-4R

532	65927	Rotor, [TH200-4R] (Pump) (7-Vane) 1981-90	1	8634091
532	65927A	Rotor, [TH200-4R] (Pump) (10-Vane) 1981-90	1	8654389
533	75926	Vane, [TH200-4R] (Pump) 1981-90	7-10	8631280
533	K77910	Vane & Ring Kit, [TH200-4R] (Pump) (7-Vane) 1981-90	1	8634904
533	K77910A	Vane & Ring Kit, [TH200-4R] (Pump) (10-Vane) 1981-90	1	
534	65928	Pump Slide, [TH200-4R] (.7079") 1981-90	1	8634083
535	65797	Pin, [TH200-4R] (Pump Slide Pivot) 1981-90	1	8634097
536	77722	Spring, [TH200-4R] (Pump Slide) (Outer) 1981-90	1	8639563
537	77723	Spring, [TH200-4R] (Pump Slide) (Inner) 1981-90	1	8639562
538	65925S	Ring, [TH200-4R] (Pump Vane) (Steel) 1981-90	2	8678127
539	65929	Rotor Guide, [TH200-4R] (Pump) (7-Vane) 1981-90	1	8654733
539	65929A	Rotor Guide, [TH200-4R] (Pump) (10-Vane) 1981-90	1	12337830
540	65798	Spring, [TH200-4R] (Pivot Pin) 1981-90	1	8634098
547	65774	Apply Ring, [TH200 / TH200C / TH200-4R] (Forward Clutch) (V-8) 1976-90	1	8628458
548	65772J	Apply Ring, [TH200 / TH200C / TH200-4R] (Direct Clutch) (V-8) 1976-90	1	8628459
549	65778	Apply Ring, [TH200 / TH200C / TH200-4R] (Low / Reverse Clutch) (V-8) 1976-90	1	8678939
551	65755	Drum, [TH200-4R] (Overrun Clutch) 1981-90	1	8634107
554	65733	Drum, [TH200] (Forward Clutch) (4 & 6 Cylnder) 1976-E79	1	8638944
554	65733A	Drum, [TH200] (Forward Clutch) (V-8) 1976-E79	1	8632953
554	65733B	Drum, [TH200C] (Forward Clutch) (V-8) L1979-87	1	8632969
554	65733C	Drum, [TH200C] (Forward Clutch) (V-6) 1982-87	1	8633948
554	65766	Drum, [TH200-4R] (Forward Clutch) 1981-90	1	8634926
555	65716D	Drum, [TH200 /200C] (Direct Clutch) 1976-87	1	8630922
555	65717A	Drum, [TH200-4R] (Direct Clutch) 1981-90	1	8677993
560	K65765	Piston Kit, [TH200-4R] (4th Clutch) 1981-90	1	
561	K65810	Piston Kit, [TH200-4R] (Overrun Clutch) 1981-90	1	
564	K65760	Piston Kit, [TH200 / TH200C / TH200-4R] (Forward Clutch) (Steel Piston) 1976-90	1	
564	K65760A	Piston Kit, [TH200 / TH200C / TH200-4R] (Forward Clutch) (Aluminum Piston) 1979-90	1	
565	K65764	Piston Kit, [TH200 / TH200C / TH200-4R] (Direct Clutch) 1976-90	1	
567	K65769A	Piston Kit, [TH200 / TH200C / TH200-4R] (Low / Reverse Clutch) 1976-90	1	
580	65759	Planet, [TH200-4R] (Overdrive) 1981-90	1	8678912
582	65747	Planet, [TH200 / TH200C / TH200-4R] (Forward) 1976-90	1	8677982
584	65731	Planet, [TH200 / TH200C / TH200-4R] (Rear) 1976-90	1	8677999
590	65761	Ring Gear, [TH200-4R] (Overdrive Planet) 1981-90	1	8634037
592	65713	Ring Gear, [TH200 / TH200C / TH200-4R] (Forward Planet) 1976-90	1	8678944
594	65730	Ring Gear, [TH200 / TH200C / TH200-4R] (Rear) (Planet) 1976-90	1	8678904
610	65834	Sun Gear, [TH200-4R] (Overdrive Planet) 1981-90	1	8677983
612	65748	Sun Gear, [TH200 / TH200C / TH200-4R] (Forward Planet) 1976-90	1	8628190
614	65750	Sun Gear, [TH200 / TH200C / TH200-4R] (Rear) (Planet) 1976-90	1	8678905
622	65749	Shell, [TH200 / TH200C / TH200-4R] (Input Drum) 1976-90	1	
622	65749H	Shell, [TH200 / TH200C / TH200-4R] (Input Drum) (Hardened) 1976-90	1	8648484
630	65751A	Support, [TH200-4R] (Direct Drum) (Aluminum) 1981-90	1	8677987
632	65751	Housing, [TH200 / TH200C / TH200-4R] (Low / Reverse Clutch) (Steel) 1976-90	1	8678906
		SPRAGS & ONE WAY CLUTCHES		
650	65724	Sprag, [TH200-4R] (Overdrive) 1981-90	1	8634049
654	65727	Sprag, [TH200 / TH200C / TH200-4R] (Low Clutch) (Narrow) (Early)	1	8628183
660	65838	Inner Race, [TH200-4R] (Overdrive Sprag) 1981-90	1	8634038
664	65752	Inner Race, [TH200 / TH200C / TH200-4R] (Low Clutch Sprag) 1976-90	1	8628184

		HARD PARTS (Continued)		
673	65633	Shaft, [TH200-4R] (Turbine) 1981-90	1	8677998
678	65737	Shaft, [TH200] (Output) (1st Design) (14 Teeth) (Governor Gear) (*Uses Metal Speed-O Gear) 1976-77	1	
678	65737A	Shaft, [TH200] (Output) (2nd Design) (16 Teeth) (Governor Gear) (*Uses Metal Speed-O Gear) 1977-78	1	
678	65739	Shaft, [TH200C] (Output) (3rd Design) (16 Teeth) (Governor Gear) (*Uses Plastic Speed-O Gear) 1979-Up	1	8648472
678	65740	Shaft, [TH200-4R] (Output) 1981-90	1	8677997
680	65410	Governor, [TH200 / TH200C] (14 Teeth) (1-Spring) 1976-87	1	8655982
680	65410A	Governor, [TH200 / TH200C] (14 Teeth) (2-Spring) 1976-87	1	8638921
680	65410B	Governor, [TH200 / TH200C] (13 Teeth) (2-Spring) 1976-87	1	8633942
680	65410C	Governor, [TH200 / TH200C] (13 Teeth) (1-Spring) 1976-87	1	8633940
680	65410M	Governor, [TH200-4R] (13 Teeth) (Speed-O Gear) (Small Weight Is .750” Tall) 1981-90	1	8655962
680	65410P	Governor, [TH200-4R] (12 Teeth) (Speed-O Gear) 1981-90	1	8655963
680	65410T	Governor, [TH200-4R] (11 Teeth) (Speed-O Gear) 1981-90	1	8655976
680	65410R	Governor, [TH200-4R] (10 Teeth) (Speed-O Gear) 1981-90	1	
680	65410S	Governor, [TH200-4R] (13 Teeth) (Speed-O Gear) (Small Weight Is .657” Tall) 1981-90	1	8655965
680	65410Q	Governor, [TH200-4R] (14 Teeth) (Speed-O Gear) (Natural) 1981-90	1	8655964
680	65410N	Governor, [TH200-4R] (14 Teeth) (Speed-O Gear) (Green) 1981-90	1	24200558
684	K65411	Gear Kit, [TH200 / TH200C] (Governor) (14 Teeth) 1976-87	1	
684	K65411A	Gear Kit, [TH200 / TH200C] (Governor) (13 Teeth) 1976-87	1	8638924
684	K65413	Gear Kit, [TH200-4R] (Governor) (12 Teeth) 1981-90	1	8634935
684	K65414	Gear Kit, [TH200-4R] (Governor) (11 Teeth) 1981-90	1	8634965
684	K65412	Gear Kit, [TH200-4R] (Governor) (13 Teeth) 1981-90	1	8634934
684	K65415	Gear Kit, [TH200-4R] (Governor) (10 Teeth) 1981-90	1	8639906
686	65440	Cover, [TH200 / TH200C] (Governor) 1976-87	1	8628933
686	65440A	Cover, [TH200-4R] (Governor) 1981-90	1	
698	65110B	Plate, [TH200-4R] (Oil Deflector) (4-Legs) 1981-90	1	8634701
		VALVE BODIES (REBUILT)		
740	GM-4607	Valve Body, [TH200] (Without Lock-Up) 1976-87	1	
740	GM-4608	Valve Body, [TH200C] (With Lock-Up) 1976-87	1	
740	GM-4609	Valve Body, [TH200-4R] 1981-90	1	
		VALVE BODIES		
740	65754	Valve Body, [TH200] 1976-78	1	
740	65754A	Valve Body, [TH200C] (*All Except 1984 With 3rd Clutch Oil Switch) 1979-87	1	
740	65754B	Valve Body, [TH200C] (With 3rd Clutch Oil Switch) 1984	1	
740	65753A	Valve Body, [TH200-4R] (Computer Control) 1985-90	1	
740	65753	Valve Body, [TH200-4R] (With Converter Shift Valve) 1981-84	1	
		VALVE BODY COMPONENTS		
	77872-02K	Universal TV Cable Repair, [TH200 / TH200C / TH200-4R]	1	Sonnax
668	6242CS	Spring, [TH200/ TH200C / TH200-4R] (Throttle Valve) (*Anti-Stick) 1976-90	1	
741	65754-01K	Valve & Sleeve Kit, [TH200 / TH200C / TH200-4R] (Throttle Valve) (.357”) 1976-Up	1	Sonnax
741	65754-02K	Valve & Sleeve Kit, [TH200 / TH200C / TH200-4R] (Throttle Valve) (.390”) 1976-Up	1	Sonnax
741	65754-03K	Valve & Sleeve Kit, [TH200 / TH200C / TH200-4R] (Throttle Valve) (.430”) 1976-Up	1	Sonnax
741	65683	Valve, [TH200-4R] (Manual) 1981-90	1	
741	13924	Check Ball, [TH200-4R] (Valve Body) (.250”) (Viton) 1969-86	AR	6261179V
746	65999C	Plate, [TH200-4R] (Accumulator) 1981-90	1	

TH200/TH200C/TH200-4R

		HARD PARTS (Continued)		
747	65999	Plate, [TH200-4R] (Valve Body) (Monte Carlo SS) 1981-90	1	8639554
747	65999A	Plate, [TH200-4R] (Valve Body) (Square, Wide U, Square, UVV) 1981-90	1	8657010
747	65999B	Plate, [TH200-4R] (Valve Body) (Code X) 1981-90	1	8657309
760	65701A	Case, [TH200] (Chevy) 1976-78	1	
760	65701B	Case, [TH200] (Chevy) 1979-81	1	
760	65701C	Case, [TH200C] (Chevy) 1981-Up	1	
760	65701D	Case, [TH200] (Buick, Olds, Pontiac) 1976-78	1	
760	65701E	Case, [TH200] (Buick, Olds, Pontiac) 1979-81	1	
760	65701F	Case, [TH200C] (Buick, Olds, Pontiac) 1981-Up	1	
760	65701G	Case, [TH200] (Chevette) 1976-78	1	
760	65701H	Case, [TH200] (Chevette) 1979-Up	1	
760	65701J	Case, [TH200] (Chevy Luv) 1976-78	1	
760	65701PA	Case, [TH200] (Monza) (4-Bolt Holes on Extension Housing) 1976-78	1	
760	65701Q	Case, [TH200] (Monza) (3-Bolt Holes on Extension Housing) 1976-78	1	
760	65701R	Case, [TH200] (Monza) 1979-80	1	
760	65701S	Case, [TH200C] (Monza) 1980-Up	1	
760	65701T	Case, [TH200C] (Chevy S-10) (V-6) 1981-Up	1	
760	65701N	Case, [TH200] (Sunbird) 1979-81	1	
760	65701P	Case, [TH200C] (Sunbird) 1981-Up	1	
760	65703	Case, [TH200-4R] 1981-Up	1	8634950
		CASE COMPONENTS		
386	65167	Cup Plug Seal, [TH200 / TH200C / TH200-4R] (Low / Reverse Clutch Housing) 1976-Up	1	8682481
761	65751-S	Low / Reverse Clutch Housing Fix, [TH200 / TH200C / TH200-4R] 1976-Up	1	M20706
		HARD PARTS (Continued)		
765	65801	Pan, [TH200] 1976-78	1	
765	65802	Pan, [TH200C] (Deep) 1979-Up	1	8648349
765	65803	Pan, [TH200-4R] 1981-Up	1	8639950
774	35922	Housing, [TH200 / TH200C] (Speed-O) (7/8" Steel) (*Use in Place of 7/8" Aluminum) 1976-Up	1	25513247
774	84922	Housing, [TH200-4R] (Speed-O) (15/16" Aluminum) (Rubber Seal Type) 1981-Up	1	
847	65807M	Gear, [TH200 / TH200C] (Speed-O Drive) (7 Teeth) (Red) (1/2" Slot)	1	
847	65815G	Gear, [TH200 / TH200C] (Speed-O Drive) (15 Teeth) (Gray) (1/2" Slot)	1	
847	65808B	Gear, [TH200-4R] (Speed-O Drive) (9 Teeth) (Green) (1/2" Slot)	1	
847	65817R	Gear, [TH200 / TH200C] (Speed-O Drive) (17 Teeth) (Red) (1/2" Slot)	1	
847	65818B	Gear, [TH200 / TH200C] (Speed-O Drive) (18 Teeth) (Blue) (1/2" Slot)	1	
848	31420	Gear, [TH200 / TH200C] (Speed-O Driven) (34 Teeth) (Green) (With plastic Shaft)	1	
848	31407	Gear, [TH200 / TH200C] (Speed-O Driven) (20 Teeth) (Blue)	1	
848	31405	Gear, [TH200 / TH200C] (Speed-O Driven) (18 Teeth) (Brown)	1	
848	31408	Gear, [TH200 / TH200C] (Speed-O Driven) (21 Teeth) (Red)	1	
848	31409	Gear, [TH200 / TH200C] (Speed-O Driven) (22 Teeth) (Gray)	1	
848	31412	Gear, [TH200 / TH200C] (Speed-O Driven) (23 Teeth) (Black)	1	
848	31413	Gear, [TH200 / TH200C] (Speed-O Driven) (24 Teeth) (Yellow)	1	
848	31421	Gear, [TH200 / TH200C] (Speed-O Driven) (35 Teeth) (Orange) (With Plastic Shaft)	1	
848	31422	Gear, [TH200 / TH200C] (Speed-O Driven) (36 Teeth) (White) (With Plastic Shaft)	1	

848	31423	Gear, [TH200 / TH200C] (Speed-O Driven) (37 Teeth) (Red) (With Plastic Shaft)	1	
848	31424	Gear, [TH200 / TH200C] (Speed-O Driven) (38 Teeth) (Blue) (With Plastic Shaft)	1	
848	31425	Gear, [TH200 / TH200C] (Speed-O Driven) (39 Teeth) (Brown) (With Plastic Shaft)	1	
848	31426	Gear, [TH200 / TH200C] (Speed-O Driven) (40 Teeth) (Black) (With Plastic Shaft)	1	
848	31427	Gear, [TH200 / TH200C] (Speed-O Driven) (41 Teeth) (Yellow) (With Plastic Shaft)	1	
848	31428	Gear, [TH200 / TH200C] (Speed-O Driven) (42 Teeth) (Green) (With Plastic Shaft)	1	
848	31429	Gear, [TH200 / TH200C] (Speed-O Driven) (43 Teeth) (Purple) (With Plastic Shaft)	1	
848	31430	Gear, [TH200 / TH200C] (Speed-O Driven) (44 Teeth) (Gray) (With Plastic Shaft)	1	
848	31431	Gear, [TH200 / TH200C] (Speed-O Driven) (45 Teeth) (Blue) (With Plastic Shaft)	1	
849	65742	Clip, [TH200 / TH200C] (Speed-O Gear) (Short) 1976-Up	1	8628557
	K65928A	Snap Ring Kit, [TH200 / TH200C / TH200-4R / 325 / 3254L] 1976-Up	1	43680
860	65600	Snap Ring, [TH200-4R] (Under 4th Clutch Pack) 1981-Up	1	8634029
861	65600A	Snap Ring, [TH200-4R] (Holds 4th Clutch Pressure Plate in Case) 1981-Up	1	9634158
862	65718S	Snap Ring, [TH200-4R] (Holds 4th Clutch Retainer to Center Support) 1981-Up	1	8634023
864	65601	Snap Ring, [TH200-4R] (Holds Overrun Clutch in Drum) 1981-Up	1	8634056
865	65601A	Snap Ring, [TH200-4R] (Holds Overdrive Sprag Inner Race to Overrun Drum) 1981-Up	1	8634274
876	65789	Snap Ring, [TH200 / TH200C / TH200-4R] (Holds Pressure Plate in Forward Drum) 1976-Up	1	8628089
877	65602	Snap Ring, [TH200 / TH200C / TH200-4R] (Holds Spring & Retainer in Forward Drum) 76-Up	1	8628153
878	65789	Snap Ring, [TH200 / TH200C / TH200-4R] (Holds Pressure Plate in Direct Drum)	1	8628089
879	65602A	Snap Ring, [TH200 / TH200C / TH200-4R] (Holds Retainer in Direct Drum) 1976-Up	1	8628059
880	65603	Snap Ring, [TH200-4R] (Holds Overdrive Planet to Turbine Shaft) 1981-Up	1	8634039
883	65604	Snap Ring, [TH200 / TH200C / TH200-4R] (Holds Low / Reverse Clutch Housing to Case) 1976-Up	1	8628210
884	65749R-S	Snap Ring, [TH200 / TH200C / TH200-4R] (Holds Shell to Sun Gear) 1976-Up	1	8623105
892	65605	Snap Ring, [TH200 / TH200C / TH200-4R] (Holds Low / Reverse Pressure Plate to Case) 1976-Up	1	
893	65606	Snap Ring, [TH200 / TH200C / TH200-4R] (Holds Low / Reverse Clutch Retainer in) 1976-Up	1	8628404
894	65567	Snap Ring, [TH200 / TH200C / TH200-4R] (Holds Front Planet to Output Shaft) 1976-Up	1	8628170
896	65607	Snap Ring, [TH200 / TH200C / TH200-4R] (Holds Servo Cover in Case) 1976-Up	1	8657213
897	65608	Snap Ring, [TH200 / TH200C] (Holds Governor Cover in Case) 1976-Up	1	8628244
905	K65895	Servo Assembly, [TH200] 1976-78	1	8678942
905	K65895A	Servo Assembly, [TH200C / TH200-4R] 1979-Up	1	
907	6578-01	Nylon Bushing, [TH200 / TH200C] (Intermediate) (Stops Leaks & Band Failure) (15-Per Kit)	1	Sonnax
907	K65840	Super Servo, [TH200-4R]	1	Superior
908	65786E	Pin, [TH200 / TH200C / TH200-4R] (Servo) (Extendo Pin)	1	Teckpak
908	65785A	Pin, [TH200 / TH200C / TH200-4R] (Servo) (1-Ring) 1976-Up	1	8630125
908	65786A	Pin, [TH200 / TH200C / TH200-4R] (Servo) (2-Ring) 1976-Up	1	8630126
908	65787A	Pin, [TH200 / TH200C / TH200-4R] (Servo) (3-Ring) 1976-Up	1	8630127
908	65788A	Pin, [TH200 / TH200C / TH200-4R] (Servo) (1-Wide Band) 1976-Up	1	8630128
911	65793A	Spring, [TH200 / TH200C / TH200-4R] (Intermediate Servo Cushion) (Purple) 1976-Up	1	8628109
911	65793B	Spring, [TH200 / TH200C / TH200-4R] (Intermediate Servo Cushion) (No Color) 1976-Up	1	8628110
911	65793C	Spring, [TH200 / TH200C / TH200-4R] (Intermediate Servo Cushion) (Blue) 1976-Up	1	8628114
911	65793	Spring, [TH200 / TH200C / TH200-4R] (Intermediate Servo Cushion) (White) 1976-Up	1	8630117
911	65793D	Spring, [TH200-4R] (Intermediate Servo Cushion) 1981-Up	1	8639264
925	K65790	Accumulator Assembly, [TH200 / TH200C] (1-2 Accumulator) 1976-Up	1	8678941
	K65790K	Accumulator Assembly, [TH200-4R] (1-2 Accumulator) 1981-Up	1	
926	65795R	Spring, [TH200 / TH200C] (1-2 Accumulator) (Purple) 1976-Up	1	

TH200/TH200C/TH200-4R

926	65795S	Spring, [TH200 / TH200C] (1-2 Accumulator) (No Color) 1976-Up	1	8628276
926	65799	Spring, [TH200-4R] (1-2 Accumulator) (No Color) 1981-Up	1	8634391
926	65799A	Spring, [TH200-4R] (1-2 Accumulator) (White) 1981-Up	1	8657012
927	65790	Piston, [TH200 / TH200C] (1-2 Accumulator) 1976-Up	1	8628318
927	65790K	Piston, [TH200-4R] (1-2 Accumulator) 1981-Up	1	8634923
929	65813	Housing, [TH200-4R] (1-2 Accumulator) 1981-Up	1	8678913
937	65790L	Piston, [TH200-4R] (3-4 Accumulator) 1981-Up	1	8634956
960	65765	Piston, [TH200-4R] (4th Clutch) 1981-Up	1	
961	65810	Piston, [TH200-4R] (Overrun Clutch) 1981-Up	1	8635028
964	65760	Piston, [TH200/ TH200C / TH200-4R] (Forward Drum) (Steel) 1976-Up	1	8628971
964	65760A	Piston, [TH200 / TH200C / TH200-4R] (Forward Drum) (Aluminum) 1976-Up	1	
965	65764	Piston, [TH200 / TH200C / TH200-4R] (Direct Clutch) 1976-Up	1	8678931
967	65769A	Piston, [TH200 / TH200C / TH200-4R] (Low / Reverse Clutch) 1976-Up	1	8678938
970	65706	Springs W/Retainer, [TH200-4R] (4th Clutch Return 1981-Up	1	
971	65705	Wave Spring, [TH200-4R] (Overrun Clutch Return) 1981-Up	1	
974	65709	Springs W/Retainer, [TH200 / TH200C / TH200-4R] (Forward Clutch Return) 1976-Up	1	8628492
975	65720	Springs W/Retainer, [TH200 / TH200C/ TH200-4R] (Direct Clutch Return) 1976-Up	1	8630096
977	65707	Return Spring, [TH200 / TH200C / TH200-4R] (Low / Reverse Clutch) 1976-Up	1	8628222
981	65837	Retainer, [TH200-4R] (Overrun Spring)	1	8634061
985	65722	Spring Guide, [TH200 / TH200C / TH200-4R] (Direct Clutch Return) 1976-Up	1	8630195
987	65714	Spring Retainer, [TH200 / TH200C / TH200-4R] (Low / Reverse Clutch) 1976-Up	1	8678907
991	K65676	Linkage Assembly, [TH200 / TH200C] (Internal) 1976-Up	1	
991	65687	Detent Spring W/Roller, [TH200] 1976-78	1	8628032
991	K65676A	Linkage Assembly, [TH200-4R] (Internal) 1981-Up	1	
992	K65675A	Shift Lever, [TH200 / TH200C] (External) 1976-Up	1	8679990
995	K65678	Park Pawl Assembly, [TH200 / TH200C] 1976-Up	1	
995	K65678A	Park Pawl Assembly, [TH200-4R] 1981-Up	1	
997	65768A	Wire Link, [TH200] (Detent Cable) (1.416” Between Bends) 1976-78	1	8628706
997	65768N	Wire Link, [TH200] (Detent Cable) (1.963” Between Bends) (Yellow) 1976-78	1	8630767
997	65768P	Wire Link, [TH200C / TH200-4R] (Detent Cable) 1979-Up	1	8657304
997	K65685	T.V. Bracket Assembly, [TH200 / TH200C / TH200-4R] 1976-Up	1	8648670
999	65679	Tube, [TH200-4R] (Oil Signal Pipe) 1981-Up	1	8634313

NOTES

TH325

FWD 3 Speed

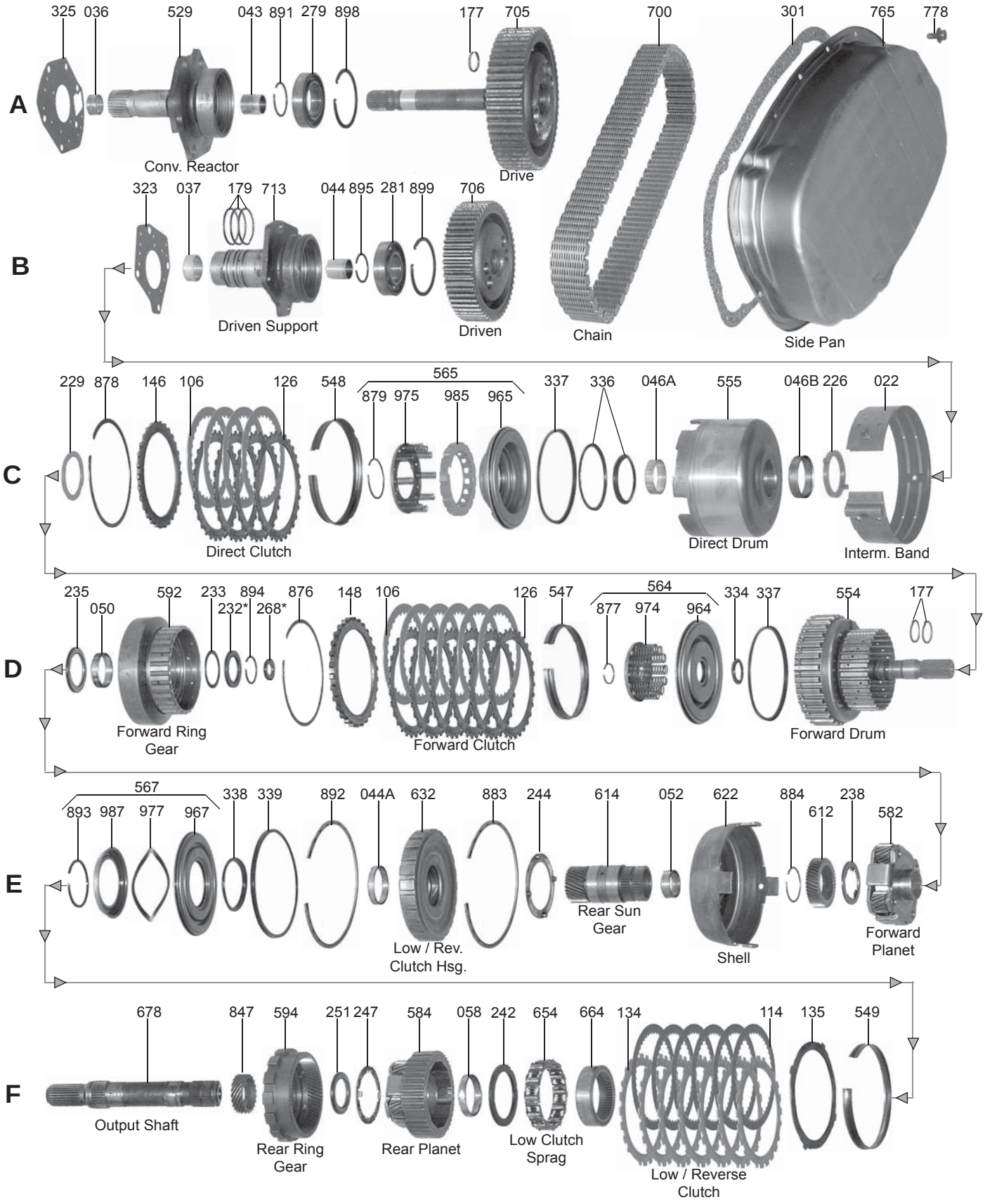

FWD 3 Speed

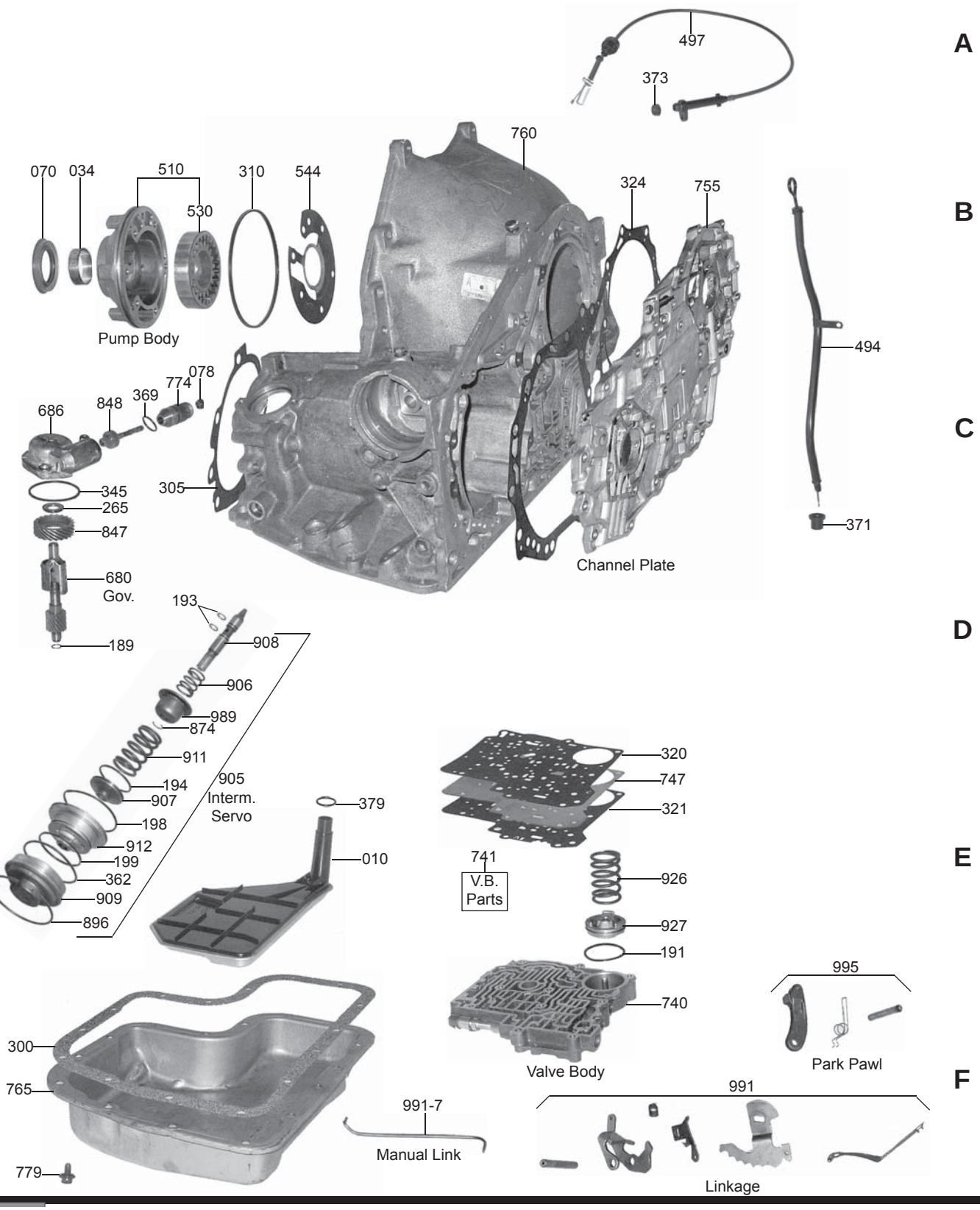
A
497
373
B
760
070
034
510
530
310
544
324
755
494
371
Pump Body
Channel Plate
C
078
774
369
848
686
345
265
847
680
Gov.
189
305
D
193
908
906
989
874
911
194
907
198
912
199
362
909
896
905
Interm.
Servo
379
010
E
320
747
321
741
V.B.
Parts
926
927
191
740
Valve Body
F
995
Park Pawl
991
991-7
Manual Link
Linkage
300
765
779

TH325-4L

FWD 4 Speed

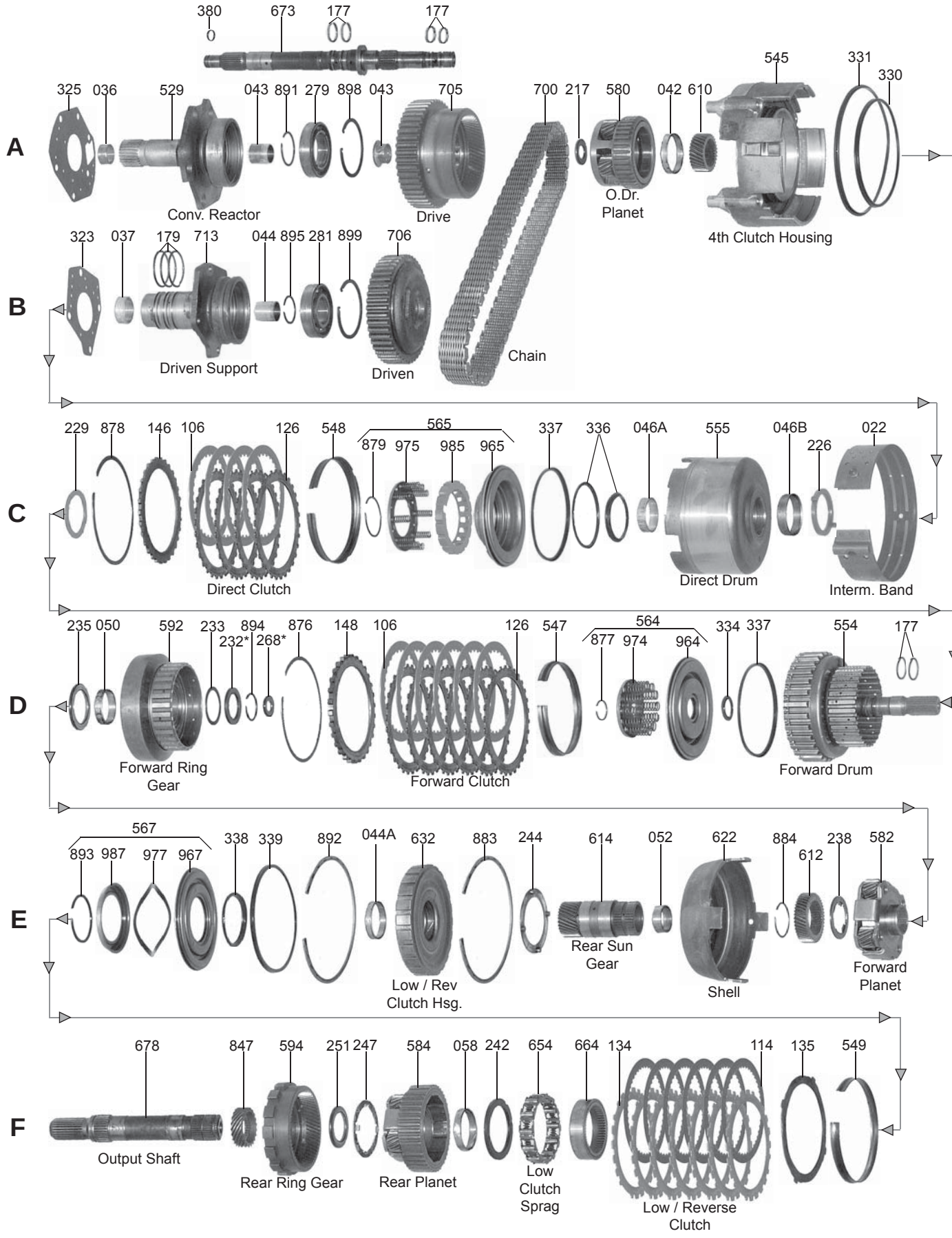

FWD 4 Speed

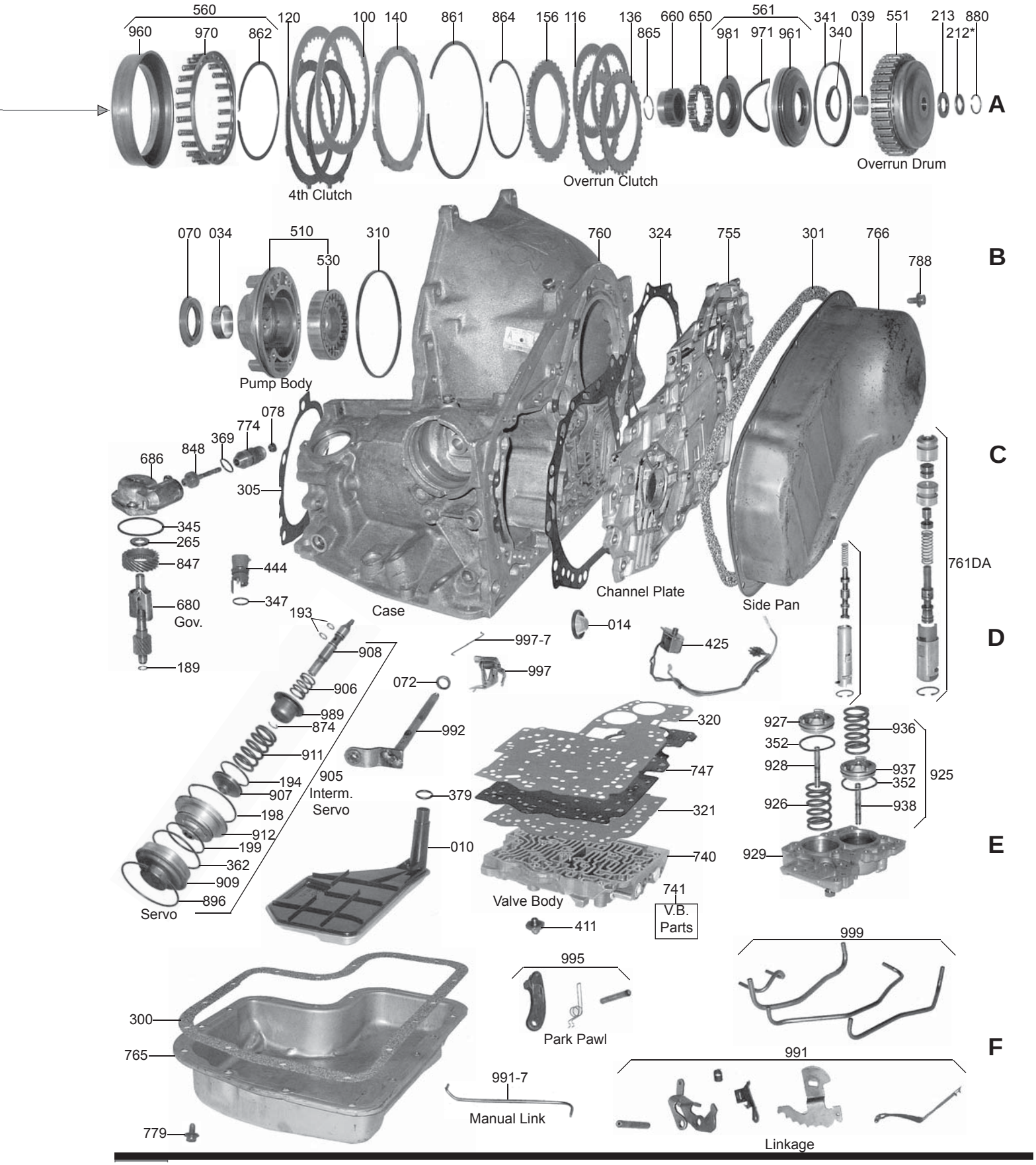
560
960
970
862
120
4th Clutch
100
140
861
864
156
116
Overrun Clutch
136
865
660
650
561
981
971
961
341
340
039
551
Overrun Drum
213
212*
880
A
070
034
510
530
310
Pump Body
760
324
755
301
766
788
B
078
774
369
848
686
305
Case
Channel Plate
Side Pan
761DA
C
345
265
847
680
Gov.
189
444
347
193
908
906
989
874
911
194
907
198
912
199
362
909
896
Servo
905
Interm.
Servo
997-7
997
072
992
014
425
D
320
747
321
740
379
010
741
V.B.
Parts
Valve Body
411
927
352
928
926
936
937
352
938
925
929
E
300
765
779
995
Park Pawl
999
991
991-7
Manual Link
Linkage
F

TH325/TH325-4L

ILL#	PART#	DESCRIPTION	QTY	REF #
		OVERHAUL KIT		
	K65900J	Overhaul Kit, [TH325] 1979-81	1	
	K65900L	Overhaul Kit, [TH325-4L] 1982-85	1	
		MASTER L/STEEL KIT		
	DK6500J-S	Master L/Steels, [TH325] 1979-81	1	
	DK6500L-S	Master L/Steels, [TH325-4L] 1982-85	1	
		MASTER W/STEEL KIT		
	DK6500J	Master W/Steels, [TH325] 1979-81	1	
	DK6500L	Master W/Steels, [TH325-4L] 1982-85	1	
		FILTER		
010	65710J	Filter, [TH325] 1979-81	1	8632997
010	65710L	Filter, [TH325-4L] 1982-85	1	8635166
		FILTER KIT		
	FK65710J	Filter Kit, [TH325] 1979-81	1	
	FK65710L	Filter Kit, [TH325-4L] 1982-85	1	
		MISC. FILTERS		
014	65712	Filter, [TH325-4L] (Governor Screen) 1982-85	1	8635111
		BANDS		
022	65700	Band, [TH325 / 325-4L] (Flex) 1979-85	1	8657210
022	65700K	Band, [TH325 / 325-4L] (Flex) (Kevlar Lining) 1979-85	1	
		BUSHINGS		
	K65901J	Bushing Kit, [TH325] 1979-81	1	
	K65901L	Bushing Kit, [TH325-4L] 1982-85	1	
034	8005	Bushing, [TH325] (Pump Body) 1979-81	1	8629961
034	65005	Bushing, [TH325-4L] (Pump Body) 1982-85	1	8649963
036	34002	Bushing, [TH325] (Drive Sprocket Support Front) 1979-81	1	
036	65002	Bushing, [TH325-4L] (Drive Sprocket Support Front) 1982-85	1	
037	65003	Bushing, [TH325-4L] (Driven Sprocket Support) 1982-85	1	8628916
039	65010	Bushing, [TH325-4L] (Overrun Drum) 1982-85	1	8634908
043	65003	Bushing, [TH325-4L] (Drive Sprocket Support Rear) 1982-85	1	
044A	65006	Bushing, [TH325 / 325-4L] (Low / Reverse Clutch Housing) (Center Support) 1976-90	1	8628929
046A	65000	Bushing, [TH325 / 325-4L] (Direct Drum) (Large) (2.110"OD) 1979-85	1	8628918
046B	65001	Bushing, [TH325 / 325-4L] (Direct Drum) (Small) (Babbit) 1979-85	1	8634917
050	65012	Bushing, [TH325 / 325-4L] (Forward Ring Gear) 1979-85	1	8630990
052	65008	Bushing, [TH325 / 325-4L] (Rear) (Sun Gear) 1979-85	1	8628928
058	65009	Bushing, [TH325 / 325-4L] (Rear) (Planet) 1979-85	1	8628947
		METAL CLAD SEALS		
070	38151	Seal, [TH325] (Front) (Converter) 1979-81	1	8641826
070	65151	Seal, [TH325-4L] (Front) (Converter) 1982-85	1	8648394
072	38511	Seal, [TH325 / 325-4L] (Linkage Shaft) 1979-85	1	8623056
078	3991A	Seal, [TH325 / 325-4L] (Speed-O Shaft) (With Spring) 1979-85	1	25519078
078	3991	Seal, [TH325 / 325-4L] (Speed-O Shaft) (Without Spring) 1979-85	1	1240382
		FRICTION CLUTCH		

100	65106	Friction, [TH325-4L] (4th Clutch) (.080") 1982-85	2	8657170
100	65106HP	Friction, [TH325-4L] (4th Clutch) (.080") (Hi-Performance Red.) 1982-85	2	
106	65103	Friction, [TH325 / 325-4L] (Forward & Direct Clutch) (.078") 1979-85	6-11	8657168
106	65103HP	Friction, [TH325 / 325-4L] (Forward & Direct Clutch) (.078") (HI-Performance Red) 1979-85	6-11	
106	K65103HP	Friction Kit, [TH325 / 325-4L] (Forward & Direct Clutch) (.078") (Hi-Performance) (5-Per Kit) 1979-85	1-2	
114	65102	Friction, [TH325 / 325-4L] (Low / Reverse Clutch) (.078") 1979-85	4-6	8669069
114	65102HP	Friction, [TH325 / 325-4L] (Low / Reverse Clutch) (.078") (Hi-Performance Red) 1979-85	4-6	
114	K65102HP	Friction Kit, [TH325 / 325-4L] (Low / Reverse Clutch) (.078") (Hi-Performance) (6-Per Kit) 1979-85	1	
116	65107	Friction, [TH325-4L] (Overrun Clutch) (.080") 1982-85	2	8657031
116	K65107HP	Friction Kit, [TH325-4L] (Overrun Clutch) (.080") (Hi-Performance Red) 1982-85	1	
	K65100J	Friction Module, [TH325] 1979-81	1	
	K65100L	Friction Module, [TH325-4L] 1982-85	1	
	K65100LHP	Friction Module, [TH325-4L] (Hi-Performance Red)	1	
		STEEL CLUTCH		
120	65109	Steel, [TH325-4L] (4th Clutch) (.080") 1982-85	3	8634026
126	65100	Steel, [TH325 / 325-4L] (Direct Clutch) (.090") 1979-85	5-6	8628484
126	65104	Steel, [TH325 / 325-4L] (Forward Clutch) (.077") (Flat) 1979-85	3-5	8678902
126	65105	Steel, [TH325 / 325-4L] (Forward Clutch) (.060") (Waved) 1979-85	1	8678901
126	65105C	Steel, [TH325 / 325-4L] (Forward Clutch) (.060") (Flat) (Commercial) 1979-85	AR	
126	65100X	Steel, [TH325 / 325-4L] (Direct Clutch) (.100") (Oversize) 1979-85	AR	
134	65101	Steel, [TH325 / 325-4L] (Low / Reverse Clutch) (.076") 1979-85	5-7	8628224
134	65101X	Steel, [TH325 / 325-4L] (Low / Reverse Clutch) (.092") (Oversize) 1979-85	AR	
135	65108	Steel, [TH325 / 325-4L] (Low / Reverse Clutch) (.078") (Waved) 1979-85	1	8633371
136	65112	Steel, [TH325-4L] (Overrun Clutch) (.080") 1982-85	2	8634050
	K65110J	Steel Module, [TH325] 1979-81	1	
	K65110L	Steel Module, [TH325-4L] 1982-85	1	
		CLUTCH PRESSURE PLATES		
140	65110	Pressure Plate, [TH325-4L] (4th Clutch) (Top) 1982-85	1	8634866
146	65716	Pressure Plate, [TH325 / 325-4L] (Forward Clutch) 1979-85	1	8628088
146	65716A	Pressure Plate, [TH325 / 325-4L] (Direct Clutch) 1979-85	1	8678925
156	65113	Pressure Plate, [TH325-4L] (Overrun Clutch) 1982-85	1	8634052
		VALVE BODY KITS		
	K65908F	Valve Body Kit, [TH325] 1979-81	1	Transgo
	K65908L	Valve Body Kit, [TH325-4L] 1982-85	1	Transgo
		OIL SEALING RINGS		
	K65903J	Ring Kit, [TH325] (14-Teflon & 1-Metal) 1979-81	1	
	K65903N	Ring Kit, [TH325-4L] (Metal) 1982-85	1	
	K65903L	Ring Kit, [TH325-4L] (18-Teflon) 1982-85	1	
177	65301	Ring, [TH325 / 325-4L] (Forward Drum Shaft) (Metal) 1979-85	2	8628090
177	65301T	Ring, [TH325 / 325-4L] (Forward Drum Shaft) (Teflon, Scarf Cut) 1979-85	2	8628090
177	65301TS	Ring, [TH325 / 325-4L] (Forward Drum Shaft) (Teflon, Solid) 1979-85	2	8634598
177	65315T	Ring, [TH325-4L] (Turbine Shaft) (Front) (Teflon, Scarf Cut) 1982-85	1	8635043
177	65316T	Ring, [TH325-4L] (Turbine Shaft) (Front) (Teflon, Solid) 1982-85	1	8635497
177	65317T	Ring, [TH325-4L] (Turbine Shaft) (Rear) (Teflon) 1982-85	2	8635042
178	34120	Ring, [TH325] (Turbine Shaft) (Metal) 1979-81	1	8623296

179	65300T	Ring, [TH325 / 325-4L] (Driven Sprocket Support) (Teflon) 1979-85	3	8628055
179	65300	Ring, [TH325 / 325-4L] (Driven Sprocket Support) (Metal) 1979-85	3	8628055
189	65309J	Ring, [TH325 / 325-4L] (Governor Stem) (Teflon) 1979-85	1	8632588
191	65302	Ring, [TH325] (1-2 Accumulator) (Metal) 1979-85	1	8634161
191	65302	Ring, [TH325-4L] (3.4 Accumulator) (Metal) 1982-85	1	
193	65179	Ring, [TH325 / 325-4L] (Band Apply Pin) (Teflon) 1979-85	2	8630120
194	65306	Ring, [TH325 / 325-4L] (Intermediate Servo Piston) (Inner) (2.28") (Metal) 1979-85	1	8632150
194	65306T	Ring, [TH325 / 325-4L] (Intermediate Servo Piston) (Inner) (2.28") (Teflon) 1979-85	1	8628697
194	65312	Ring, [TH325 / 325-4L] (Intermediate Servo Piston) (Center) (1.96") (Metal) 1979-85	1	
194	65312T	Ring, [TH325 / 325-4L] (Intermediate Servo Piston) (Center) (1.96") (Teflon) 1979-85	1	8630568
194	65308	Ring, [TH325 / 325-4L] (Intermediate Servo Piston) (Inner) (2.41") (Metal) 1979-85	1	8632151
194	65308T	Ring, [TH325 / 325-4L] (Intermediate Servo Piston) (Inner) (2.41") (Teflon) 1979-85	1	8630080
198	65303	Ring, [TH325 / 325-4L] (Intermediate Servo Piston) (Outer) (Large) (Metal) 1979-85	1	8628123
198	65303T	Ring, [TH325 / 325-4L] (Intermediate Servo Piston) (Outer) (Large) (Teflon) 1979-85	1	
		WASHERS & BEARINGS		
	K65907L	Washer Kit, [TH325 / 325-4L] 1982-85	1	
	K65907J	Washer Kit, [TH325] 1979-81	1	
	K65907B	Bearing Kit, [TH325 / 325-4L] 1979-85	1	
212	65417	Washer, [TH325-4L] (Overdrive Clutch Housing) (.065") (#1) (Gray) 1982-85	1	8635225
212	65417A	Washer, [TH325-4L] (Overdrive Clutch Housing) (.073") (#2) (Dark Green) 1982-85	1	8635226
212	65417B	Washer, [TH325-4L] (Overdrive Clutch Housing) (.079") (#3) (Pink) 1982-85	1	8635227
212	65417C	Washer, [TH325-4L] (Overdrive Clutch Housing) (.086") (#4) (Brown) 1982-85	1	8635228
212	65417D	Washer, [TH325-4L] (Overdrive Clutch Housing) (.093") (#5) (Lt. Blue) 1982-85	1	8635229
212	65417E	Washer, [TH325-4L] (Overdrive Clutch Housing) (.100") (#6) (White) 1982-85	1	8635230
212	65417F	Washer, [TH325-4L] (Overdrive Clutch Housing) (.107") (#7) (Yellow) 1982-85	1	8635231
212	65417G	Washer, [TH325-4L] (Overdrive Clutch Housing) (.114") (#8) (Lt. Green) 1982-85	1	8635232
212	65417H	Washer, [TH325-4L] (Overdrive Clutch Housing) (.121") (#9) (Orange) 1982-85	1	8635233
212	65417J	Washer, [TH325-4L] (Overdrive Clutch Housing) (.128") (#10) (Violet) 1982-85	1	8635234
212	65417K	Washer, [TH325-4L] (Overdrive Clutch Housing) (.135") (#11) (Red) 1982-85	1	8635235
212	65417L	Washer, [TH325-4L] (Overdrive Clutch Housing) (.142") (#12) (Dark Blue) 1982-85	1	8635236
213	65423	Bearing, [TH325-4L] (Overrun Clutch Housing) 1982-85	1	8635058
217	65422	Bearing, [TH325-4L] (Overdrive Planet) 1982-85	2	8634035
226	65400J	Washer, [TH325 / 325-4L] (Direct Drum to Case Cover) 1979-85	1	8632020
229	65401	Washer, [TH325] (Direct Drum to Forward Drum) 1979-81	1	8632504
229	65401L	Washer, [TH325-4L] (Direct Drum to Forward Drum) 1982-85	1	
232	65403	Washer, [TH325 / 325-4L] (Forward Drum to Hub) (.117") (#1) (Orange) 1979-85	1	8630891
232	65403A	Washer, [TH325 / 325-4L] (Forward Drum to Hub) (.124") (#2) (White) 1979-85	1	8630892
232	65403B	Washer, [TH325 / 325-4L] (Forward Drum to Hub) (.131") (#3) (Yellow) 1979-85	1	8630893
232	65403C	Washer, [TH325 / 325-4L] (Forward Drum to Hub) (.138") (#4) (Blue) 1979-85	1	8630894
232	65403D	Washer, [TH325 / 325-4L] (Forward Drum to Hub) (.145") (#5) (Red) 1979-85	1	8630895
232	65403E	Washer, [TH325 / 325-4L] (Forward Drum to Hub) (.152") (#6) (Brown) 1979-85	1	8630896
232	65403F	Washer, [TH325 / 325-4L] (Forward Drum to Hub) (.159") (#7) (Green) 1979-85	1	8630897
232	65403G	Washer, [TH325 / 325-4L] (Forward Drum to Hub) (.166") (#8) (Black) 1979-85	1	8630898
232	65403H	Washer, [TH325 / 325-4L] (Forward Drum to Hub) (.173") (#9) (Pink) 1979-85	1	8630899
232	65403J	Washer, [TH325 / 325-4L] (Forward Drum to Hub) (.100") (#10) (Gold) 1979-85	1	8630911
233	65404	Washer, [TH325 / 325-4L] (Forward Hub to Spacer) 1979-85	1	8628765
235	65405	Bearing, [TH325 / 325-4L] (Front) (Planet to Hub) 1979-85	1	8628202
238	65406	Bearing, [TH325 / 325-4L] (Front) (Planet to Sun Gear) 1979-85	1	8633875

242	65408	Thrust Washer, [TH325 / 325-4L] (Rear) (Planet to Sprag Race) 1979-85	1	8648389
244	65407A	Washer, [TH325 / 325-4L] (Shell to Low / Reverse Clutch Housing) (.060") (Plastic) 1979-85	1	8628766
244	65407B	Washer, [TH325 / 325-4L] (Shell to Low / Reverse Clutch Housing) (.080") (Plastic) 1979-85	1	
244	34501A	Washer, [TH325 / 325-4L] (Shell to Low / Reverse Clutch Housing) (Metal) 1979-85	1	8628549
247	65409	Bearing, [TH325 / 325-4L] (Sun Gear to Rear Ring Gear) 1979-85	1	8628962
251	65415	Washer, [TH325 / 325-4L] (Rear) (Planet to Rear Ring Gear) 1979-85	1	8628188
265	75435B	Bearing, [TH325 / 325-4L] (Governor to Cover) 1980-Up	1	
268	65402	Washer, [TH325 / 325-4L] (Forward Drum to Output Shaft) (.068") (#1) (White) 1979-85	1	8639291
268	65402A	Washer, [TH325 / 325-4L] (Forward Drum to Output Shaft) (.073") (#2) (Neutral) 1979-85	1	8639292
268	65402B	Washer, [TH325 / 325-4L] (Forward Drum to Output Shaft) (.078") (#3) (Black) 1979-85	1	8639293
268	65402C	Washer, [TH325 / 325-4L] (Forward Drum to Output Shaft) (.083") (#4) (Green) 1979-85	1	8639294
268	65402D	Washer, [TH325 / 325-4L] (Forward Drum to Output Shaft) (.088") (#5) (Red) 1979-85	1	8639295
268	65402E	Washer, [TH325 / 325-4L] (Forward Drum to Output Shaft) (.093") (#6) (Purple) 1979-85	1	8639296
268	65402F	Washer, [TH325 / 325-4L] (Forward Drum to Output Shaft) (.098") (#7) (Brown) 1979-85	1	8639297
268	65402G	Washer, [TH325 / 325-4L] (Forward Drum to Output Shaft) (.103") (#8) (Orange) 1979-85	1	8639298
268	65402H	Washer, [TH325 / 325-4L] (Forward Drum to Output Shaft) (.108") (#9) (Yellow) 1979-85	1	8639299
268	65402J	Washer, [TH325 / 325-4L] (Forward Drum to Output Shaft) (.113") (#10) (Lt. Blue) 1979-85	1	8639300
268	65402K	Washer, [TH325 / 325-4L] (Forward Drum to Output Shaft) (.118") (#11) (Lt. Tan) 1979-85	1	8639301
268	65402L	Washer, [TH325 / 325-4L] (Forward Drum to Output Shaft) (.123") (#12) (Tan) 1979-85	1	8639302
268	65402M	Washer, [TH325 / 325-4L] (Forward Drum to Output Shaft) (.128") (#13) (Rose) 1979-85	1	8639303
268	65402N	Washer, [TH325 / 325-4L] (Forward Drum to Output Shaft) (.133") (#14) (Lt. Green) 1979-85	1	8639304
268	65402P	Washer, [TH325 / 325-4L] (Forward Drum to Output Shaft) (.138") (#15) (Smoke) 1979-85	1	8639305
279	65992L	Ball Bearing, [TH325-4L] (Drive Sprocket) 1982-85	1	
281	65992	Ball Bearing, [TH325-4L] (Driven Sprocket) 1982-85	1	
	BS1015	Qwik Shim, [TH325 / 325-4L] (Front) (Planet Replacement Shims) (Bottom) (.015") 1979-85	AR	BS1015
	BS1030	Qwik Shim, [TH325 / 325-4L] (Front) (Planet Replacement Shims) (Bottom) (.030") 1979-85	AR	BS1030
	TS1015	Qwik Shim, [TH325 / 325-4L] (Front) (Planet Replacement Shims) (Top) (.015") 1979-85	AR	TS1015
	TS1030	Qwik Shim, [TH325 / 325-4L] (Front) (Planet Replacement Shims) (Top) (.030") 1979-85	AR	TS1030
	BS5015	Qwik Shim, [TH325 / 325-4L] (Rear) (Planet Replacement Shims) (Bottom) (.015") 1979-85	AR	BS5015
	BS5030	Qwik Shim, [TH325 / 325-4L] (Rear) (Planet Replacement Shims) (Bottom) (.030") 1979-85	AR	BS5030
	TS5015	Qwik Shim, [TH325 / 325-4L] (Rear) (Planet Replacement Shims) (Top) (.015") 1979-85	AR	TS5015
	TS5030	Qwik Shim, [TH325 / 325-4L] (Rear) (Planet Replacement Shims) (Top) (.030") 1979-85	AR	TS5030
		GASKETS & RUBBER COMPONENTS		
300	65501	Gasket, [TH325 / 325-4L] (Pan) (Bottom) 1979-85	1	8635014
301	65169	Gasket, [TH325] (Sprocket Cover) 1979-81	1	8632032
301	65169A	Gasket, [TH325-4L] (Sprocket Cover) 1982-85	1	8635154
305	65171	Gasket, [TH325 / 325-4L] (Final Drive to Case) 1979-85	1	1627494
308	65172B	Gasket, [TH325-4L] (Accumulator) 1982-85	1	8635093
311	13273	O-Ring, [T325 / 325-4L] (Pump) 1979-85	1	8625007
320	65173	Gasket, [TH325] (Upper) (Valve Body Plate to Case) 1979-81	1	8632831
320	65173A	Gasket, [TH325-4L] (Upper) (Valve Body Plate to Case) 1982-85	1	8659032
321	65172	Gasket, [TH325] (Lower) (Valve body) 1979-81	1	8632832
321	65172A	Gasket, [TH325-4L] (Lower) (Valve body) 1982-85	1	8639857
323	65166	Gasket, [TH325] (Driven Sprocket Support to Case Cover) 1979-81	1	8632013
323	65166A	Gasket, [TH325-4L] (Driven Sprocket Support to Case Cover) 1982-85	1	8635039
324	65164	Gasket, [TH325] (Case Cover) 1979-81	1	8632019
324	65164A	Gasket, [TH325-4L] (Case Cover) 1982-85	1	8635025
325	65165	Gasket, [TH325] (Drive Sprocket Support to Case Cover) 1979-81	1	8632018

TH325/TH325-4L

330	65574	Lip Seal, [TH325-4L] (4th Clutch) (Inner) 1982-85	1	8634025
331	65575	Lip Seal, [TH325-4L] (4th Clutch) (Outer) 1982-85	1	8635562
334	65564	Lip Seal, [TH325 / 325-4L] (Forward Clutch Piston) (Inner, Small) 1979-85	1	8630102
336	65562	Lip Seal, [TH325 / 325-4L] (Direct Clutch Piston) (Inner) 1979-85	1	8628079
336	65561	Lip Seal, [TH325 / 325-4L] (Direct Clutch Piston) (Center) 1979-85	1	8630295
337	65560	Lip Seal, [TH325 / 325-4L] (Forward & Direct Clutch Piston) (Outer) 1979-85	2	8628078
338	65556	Lip Seal, [TH325 / 325-4L] (Low / Reverse Clutch Piston) (Inner) 1979-85	1	8628246
339	65565	Lip Seal, [TH325 / 325-4L] (Low / Reverse Clutch Piston) (Outer) 1979-85	1	8628364
340	65573	Lip Seal, [TH325-4L] (Overrun Clutch Piston) (Inner) 1982-85	1	8634054
341	65572	Lip Seal, [TH325-4L] (Overrun Clutch Piston) (Outer) 1982-85	1	8634053
345	65177	O-Ring, [TH325 / 325-4L] (Governor Cover) 1979-85	1	8660545
347	3410	O-Ring, [TH325-4L] (Case Connector) 1979-85	1	
352	65128	Lathe Cut Seal, [TH325-4L] (1-2 & 3-4 Accumulator) 1982-85	2	8635568
362	3256	O-Ring, [TH325 / 325-4L] (Servo Cover) 1979-85	1	8628136
362	K65900-4	Seal Kit, [TH325-4L] (Servo) 1982-85	1	
369	3718	O-Ring, [TH325 / 325-4L] (Speed-O Housing) 1979-85	1	
371	3292	Boot, [TH325-4L] (Filler Tube) 1979-85	1	1259475
373	13582	Boot, [TH325-4L] (Detent) 1979-85	1	25518260
379	3547	O-Ring, [TH325 / 325-4L] (Filter) 1979-85	1	
380	13503	O-Ring, [TH325-4L] (Input Shaft) 1982-85	1	8630049
386	65167	Cup Plug Seal, [TH325 / 325-4L] (Low / Reverse Clutch Housing) 1979-85	1	8631577
		TECHNICAL MANUALS		
	TM325/4L	Manual, [TH325-4L] (Technical) 1982-85	1	ATSG
		ELECTRICAL COMPONENTS		
411	65618	Switch, [TH325-4L] (4th Clutch) (Pressure) (Normally Closed) 1982-85	1	8683502
416	65952	Switch, [TH325-4L] (Governor Pressure) (Normally Opened) 1982-85	1	8635869
425	K84856U	Solenoid, [TH325-4L] (TCC) (Universal) 1982-85	1	Teckpak
425	K84856R	Solenoid, [TH325-4L] (TCC) (Universal) 1982-85	1	Rostra
425	65619A	Solenoid, [TH325-4L] (TCC) (With Closed Loop) 1982-85	1	8635922
425	65619B	Solenoid, [TH325-4L] (TCC) 1982-84	1	8635966
425	65619	Solenoid, [TH325-4L] (TCC) (PT, EG2, W/P, W/Gear 5.7L) 1982-85	1	8635921
425	65611	Solenoid Kit, [TH325-4L] (TCC) (1-Wire Type W/Connectors) 1982-85	1	8635920
444	77983	Connector, [TH325-4L] (Case) (3-Prong) 1982-85	1	8634383
444	84983	Connector, [TH325-4L] (Case) (4-Prong) (Square) 1982-85	1	8662395
		MISC. COMPONENTS		
487	65800A	Grommet, [TH325 / 325-4L] (Shift Lever) (Green) 1979-85	1	22503153
497	K35955CE	Detent Cable End, [TH325-4L] (Teardrop Style Connector)	1	
497	K77978	Detent Cable, [TH325 / 325-4L] (Overall Length 45") 1979-85	1	Teckpak
497	K65553	Detent Cable, [TH325 / 325-4L] (Overall Length 58") 1979-85	1	Teckpak
		HARD PARTS		
510	34919	Pump Body, [TH325] 1979-81	1	8625330
510	65920	Pump Body, [TH325-4L] 1982-85	1	8635022
529	65994	Converter Reactor, [TH325] 1979-81	1	8632011
529	65994L	Converter Reactor, [TH325-4L] (Drive Sprocket Support) 1982-85	1	8635040
530	K35201B	Pump Gear Set, [TH325] (.727") 1979-81	1	
530	K65201D	Pump Gear Set, [TH325-4L] (.776") 1982-85	1	
544	65728	Plate, [TH325] (Pump) 1979-81	1	8655935
545	65983	Housing, [TH325-4L] (4th Clutch) (Aluminum) 1982-85	1	8635911

547	65774	Apply Ring, [TH325 / 325-4L] (Forward Clutch) 1979-85	1	8628458
548	65772J	Apply Ring, [TH325 / 325-4L] (Direct Clutch) 1979-85	1	8628459
549	65777	Apply Ring, [TH325 / 325-4L] (Low / Reverse Clutch) 1979-85	1	8630933
551	65982	Drum, [TH325-4L] (Overrun Clutch) 1982-85	1	8635941
554	65733J	Drum, [TH325 / 325-4L] (Forward Clutch) 1979-85	1	8632918
555	65716D	Drum, [TH325 / 325-4L] (Direct Clutch) (5 Clutch) 1979-85	1	
555	65716E	Drum, [TH325 / 325-4L] (Direct Clutch) (6 Clutch) 1979-85	1	8630922
560	K65984	Piston Kit, [TH325-4L] (4th Clutch) 1982-85	1	
561	K65810	Piston Kit, [TH325-4L] (Overrun Clutch) 1982-85	1	
564	K65760	Piston Kit, [TH325 / 325-4L] (Forward Clutch) 1979-85	1	
565	K65764	Piston Kit, [TH325 / 325-4L] (Direct Clutch) 1979-85	1	
567	K65751	Piston Kit, [TH325 / 325-4L] (Low / Reverse Clutch) 1979-85	1	
580	65746	Planet, [TH325-4L] (Overdrive) 1982-85	1	8635036
582	65747J	Planet, [TH325 / 325-4L] (Forward) 1979-85	1	8632038
584	65734	Planet, [TH325 / 325-4L] (Rear) 1979-85	1	8632044
592	65713J	Ring Gear, [TH325 / 325-4L] (Forward Planet) 1979-85	1	8632036
594	65729	Ring Gear, [TH325 / 325-4L] (Rear) (Planet) 1979-85	1	8632048
610	65745	Sun Gear, [TH325-4L] (Overdrive Planet) 1982-85	1	8635033
612	65748J	Sun Gear, [TH325 / 325-4L] (Forward Planet) 1979-85	1	8632040
614	65750J	Sun Gear, [TH325 / 325-4L] (Rear) (Planet) 1979-85	1	8632041
622	65749	Shell, [TH325 / 325-4L] (Input Drum) 1979-85	1	8628203
622	65749H	Shell, [TH325 / 325-4L] (Input Drum) (Hardened) 1979-85	1	8648484
632	65751	Housing, [TH325 / 325-4L] (Low / Reverse Clutch) (Steel) 1979-85	1	8628212
		SPRAGS & ONE WAY CLUTCHES		
650	65726	Sprag, [TH325-4L] (Overdrive) 1982-85	1	8635037
654	65727	Sprag, [TH325 / 325-4L] (Low Clutch) (Wide) 1979-85	1	8628183
660	65758A	Inner Race, [TH325-4L] (Overdrive Sprag) 1982-85	1	8635076
664	65752	Inner Race, [TH325 / 325-4L] (Low Clutch Sprag) 1979-85	1	8628184
		HARD PARTS (Continued)		
673	65990M	Shaft, [TH325-4L] (Turbine) 1982-85	1	8635020
678	65735	Shaft, [TH325 / 325-4L] (Output) 1979-85	1	8632540
680	65410J	Governor, [TH325] (Gas) 1979-81	1	8632616
680	65410K	Governor, [TH325] (Diesel) 1979-80	1	8632530
680	65410M	Governor, [TH325] (Diesel) 1981	1	8625534
680	65410L	Governor, [TH325-4L] (Diesel) 1982-85	1	8635481
680	65410N	Governor, [TH325-4L] (Gas) 1982-85	1	8635480
700	65990P	Chain, [TH325] 1979-81	1	HV010
700	65991L	Chain, [TH325-4L] 1982-85	1	HV016
705	65990	Sprocket, [TH325] (Drive) (With Shaft) 1979-81	1	8632901
705	65990L	Sprocket, [TH325-4L] (Drive) (With Overdrive Ring Gear) 1982-85	1	8635087
706	65991	Sprocket, [TH325] (Driven) 1979-81	1	8632026
706	65991A	Sprocket, [TH325-4L] (Driven) 1982-85	1	8635089
713	65995	Support, [TH325 / 325-4L] (Driven Sprocket) 1979-85	1	8632015
		VALVE BODIES (REBUILT)		
740	GM-4610	Valve Body, [TH325] (Without Lock-Up) 1979-81	1	
740	GM-4611	Valve Body, [TH325] (With Lock-Up) 1982-85	1	
		VALVE BODIES		

TH325/TH325-4L

740	65767	Valve Body, [TH325] (Cast #) 1979-81	1	
740	65768L	Valve Body, [TH325-4L] (Cast #) 1978-85	1	
		VALVE BODY COMPONENTS		
	77872-02K	Universal TV Cable Repair, [TH325-4L]	1	Sonnax
741	65768L	Valve Assembly, [TH325-4L] (Throttle) (With Bushing, Clip, & Spring) 1982-85	1	8635944
		HARD PARTS (Continued)		
744	84922	Housing, [TH325 / 325-4L] (Driven Speed-O Gear) (1" Aluminum Bullitt)	1	8635158
755	65993	Channel Plate, [TH325] (Aluminum Case Cover) 1979-81	1	8632987
755	65993K	Channel Plate, [TH325-4L] (Aluminum Case Cover) 1982-85	1	8635984
760	65702	Case, [TH325] 1979-81	1	8632900
760	65702L	Case, [TH325-4L] 1982-85	1	8635942
		CASE COMPONENTS		
761	8635971	Plunger, [TH325-4L] (With Plastic Insert in Channel Plate) 1982-85	1	8635971
761	8635031	Valve, [TH325-4L] (Converter Clutch Valve Inside Case) 1982-85	1	8635031
761	8635074	Bushing, [TH325-4L] (Converter Clutch Valve) (Aluminum) 1982-85	1	8635074
761	8635072	Spring, [TH325-4L] (Converter Clutch) 1982-85	1	8635072
761	8639718	Valve, [TH325-4L] (Pressure Regulator) 1982-85	1	8639718
761	8635063	Bushing, [TH325-4L] (Pressure Regulator Valve) 1982-85	1	8635063
761	8635210	Spring, [TH325-4L] (Pressure Regulator) (Blue) 1982-85	1	8635210
761	8635142	Spring, [TH325-4L] (Pressure Regulator) (Orange) 1982-85	1	8635142
761	8635530	Valve, [TH325-4L] (Reverse Boost) 1982-85	1	8635530
761	8635535	Bushing, [TH325-4L] (Reverse Boost Valve) 1982-85	1	8635535
761	8635067	Spacer, [TH325-4L] (Regulator Valve Bushing) 1982-85	1	8635067
761	8635141	Valve, [TH325-4L] (Modulator Throttle Valve Boost) 1982-85	1	8635141
761	8635143	Bushing, [TH325-4L] (Modulator Throttle Valve Boost) 1982-85	1	8635143
		HARD PARTS (Continued)		
765	65802J	Pan, [TH325] (Bottom) 1979-81	1	8635959
765	65802L	Pan, [TH325-4L] (Bottom) 1982-85	1	8639859
766	65804	Pan, [TH325] (Side) 1979-81	1	
766	65804A	Pan, [TH325-4L] (Side) 1982-85	1	8635964
	K65928A	Snap Ring Kit, [200 / 200C / 200-4R / 325 / 325-4L] 1976-Up	1	43680
861	65600A	Snap Ring, [TH325-4L] (Holds 4th Clutches in Housing) 1982-85	1	9634158
862	65718S	Snap Ring, [TH325-4L] (Holds 4th Clutch Retainer in) 1982-85	1	8634023
864	65601	Snap Ring, [TH325-4L] (Holds Overrun Clutch in Drum) 1982-85	1	8634056
865	65601A	Snap Ring, [TH325-4L] (Holds Overdrive Sprag Inner Race in) 1982-85	1	8634274
876	65789	Snap Ring, [TH325 / 325-4L] (Holds Pressure Plate in Forward Drum) 1979-85 (*Also fits Direct)	1-2	8628089
877	65602	Snap Ring, [TH325 / 325-4L] (Holds Spring & Retainer in Forward Drum) 1979-85	1	8628153
878	65789	Snap Ring, [TH325 / 325-4L] (Holds Pressure Plate in Direct Drum) 1979-85	1	8628089
879	65602A	Snap Ring, [TH325 / 325-4L] (Holds Retainer in Direct Drum) 1979-85	1	8628059
880	65603	Snap Ring, [TH325-4L] (Holds Overdrive Planet to Turbine Shaft) 1982-85	1	8634039
883	65604	Snap Ring, [TH325 / 325-4L] (Holds Low / Reverse Clutch Housing to Case) 1979-85	1	8628210
884	65749RS	Snap Ring, [TH325 / 325-4L] (Holds Shell to Sun Gear) 1979-85	1	8623105
891	65568	Snap Ring, [TH325 / 325-4L] (Holds Bearing to Drive Sprocket) 1979-85	1	
892	65605	Snap Ring, [TH325 / 325-4L] (Holds Low / Reverse Pressure Plate to Case) 1979-85	1	
894	65567	Snap Ring, [TH325 / 325-4L] (Holds Front Planet to Output Shaft) 1979-85	1	8628170

895	65569	Snap Ring, [TH325 / 325-4L] (Holds Bearing to Driven Sprocket) 1979-85	1	8625020
898	65568A	Snap Ring, [TH325 / 325-4L] (Holds Bearing to Drive Sprocket Support) 1979-85	1	8635044
899	65569A	Snap Ring, [TH325 / 325-4L] (Holds Bearing to Driven Sprocket Support) 1979-85	1	11500695
905	K65443	Servo Assembly, [TH325 / 325-4L] (Intermediate) 1979-85	1	8657213
907	6578-01	Nylon Bushing, [TH325 / 325-4L] (Intermediate) (15-Per Kit) 1979-85	1	Sonnax
908	65786E	Pin, [TH325 / 325-4L] (Intermediate Servo) (Extendo) 1979-85	1	Teckpak
908	65785A	Pin, [TH325 / 325-4L] (Intermediate Servo) (1-Groove) 1979-85	1	8630125
908	65786A	Pin, [TH325 / 325-4L] (Intermediate Servo) (2-Grooves) 1979-85	1	8630126
908	65787A	Pin, [TH325 / 325-4L] (Intermediate Servo) (3-Grooves) 1979-85	1	8630127
908	65788A	Pin, [TH325 / 325-4L] (Intermediate Servo) (No Groove) 1979-85	1	8630128
925	K65444	Accumulator Assembly, [TH325-4L] (1-2 & 3-4 Accumulator) 1982-85	1	
926	65795R	Spring, [TH325] (1-2 Accumulator) (Red) 1979-81	1	8630885
926	65795G	Spring, [TH325-4L] (1-2 Accumulator) (Green) 1982-85	1	8635148
926	65795P	Spring, [TH325-4L] (1-2 Accumulator) (Purple) 1982-85	1	8635150
927	65790L	Piston, [TH325-4L] (1-2 Accumulator) 1982-85	1	8648998
929	65444	Housing, [TH325-4L] (1-2 Accumulator) 1982-85	1	8635935
936	65795F	Spring, [TH325-4L] (3-4 Accumulator) (Blue) 1982-85	1	8635277
936	65795H	Spring, [TH325-4L] (3-4 Accumulator) (White) 1982-85	1	8635702
936	65795J	Spring, [TH325-4L] (3-4 Accumulator) (Yellow) 1982-85	1	8635701
936	65795K	Spring, [TH325-4L] (3-4 Accumulator) (Orange) 1982-85	1	8635147
936	65795L	Spring, [TH325-4L] (3-4 Accumulator) (Light Green/Violet) 1982-85	1	8639858
936	65795E	Spring, [TH325-4L] (3-4 Accumulator) (Green) 1982-85	1	8639074
937	65790	Piston, [TH325-4L] (3-4 Accumulator) 1982-85	1	
938	77999	Accumulator Pin Kit, [TH325-4L] (4-Pins Only) (No Reamer) 1982-85	1	Sonnax
938	77999-02K	Accumulator Pin & Reamer Kit, [325-4L] (10-Pins) (With Reamer) 1982-85	1	Sonnax
960	65984	Piston, [TH325-4L] (4th Clutch) 1982-Up	1	
961	65810	Piston, [TH325-4L] (Overrun Clutch) 1982-85	1	8635028
964	65760	Piston, [TH325 / 325-4L] (Forward Clutch) 1979-85	1	8628971
965	65764	Piston, [TH325 / 325-4L] (Direct Clutch) 1979-85	1	8630913
967	65751P	Piston, [TH325 / 325-4L] (Low / Reverse Clutch) 1979-85	1	8678938
970	65718	Spring W/Retainer, [TH325-4L] (4th Clutch Return)	1	8635244
971	65705	Wave Spring, [TH325-4L] (Overrun Clutch Return) 1982-85	1	8634022
974	65709	Spring W/Retainer, [TH325 / 325-4L] (Forward Clutch Return) 1979-85	1	8628492
975	65720	Spring W/Retainer, [TH325 / 325-4L] (Direct Clutch Return) 1979-85	1	8630096
977	65707	Return Spring, [TH325 / 325-4L] (Low / Reverse Clutch) 1979-85	1	8628222
981	65837	Retainer, [TH325-4L] (Overrun Spring) 1982-85	1	8634061
985	65722	Spring Guide, [TH325 / 325-4L] (Direct Clutch Return) 1979-85	1	8630195
987	65714	Retainer, [TH325 / 325-4L] (Low / Reverse Clutch Return Spring) 1979-85	1	8628223
991	K65676B	Linkage Assembly, [TH325] (Internal) 1979-81	1	
991	K65676C	Linkage Assembly, [TH325-4L] (Internal) 1982-85	1	
992	K65675B	Shift Lever, [TH325] (External) 1979-81	1	6432920
992	K65675C	Shift Lever, [TH325-4L] (External) (With Hole For Grommet) 1982-85	1	8635143
992	K65675D	Shift Lever, [TH325-4L] (External) (With Stud at Top) 1982-85	1	8635918
991	65979	Manual Link, [TH325] (For Manual Valve) 1979-81	1	
991	65979L	Manual Link, [TH325-4L] (For Manual Valve) 1982-85	1	8635237
995	K65678B	Park Pawl Assembly, [TH325 / TH325-4L] 1979-85	1	
997	K65685A	T.V. Bracket Assembly, [TH325 / TH325-4L] 1979-85	1	
997	65768P	Wire Link, [TH325 (Detent Cable) 1979-81	1	8632541
999	K65679A	Tube Set, 325-4L 1982-85	1	

NOTES

TRANSAVER-TRANSMISSION OIL COOLERS



TRANSAVER-Transmission Oil Coolers

The Industry's first transmission cooler, the TRANSAVER Transmission Oil Cooler is available in six sizes to fit a wide range of applications Sub-compact to motor homes.

FEATURES:
* Ultrasonically Soldered for Reliability
* 100% Pressure Tested at 150 PSI for Quality Assurance
* High Efficiency Turbulators for Maximum Heat Dissipation
* 3/8" Push-on Fittings for Quick and Easy Installation

Model #	GVWR	Dimensions	Application	Towing Up To:
1401	Up to 12,000 lbs.	3/4" x 5" x 12-1/2"	Sub-compact to Compact cars	
1402	Up to 16,000 lbs.	3/4" x 5" x 15-7/8"	Compact and Mid-size cars	2,500 lbs.
1403	Up to 18,000 lbs.	3/4" x 7-1/2" x 12-1/2"	Mid-size and Full-size cars & pick-ups	3,500 lbs.
1404	Up to 22,000 lbs.	3/4" x 7-1/2" x 15-7/8"	Pick-ups & Vans, Class "C" motor homes	5,000 lbs.
1405	Up to 26,000 lbs.	3/4" x 10" x 15-7/8"	Class "A" motor homes, Large travel trailers	10,000 lbs.



TRANSAVER Plus- Transmission Oil Coolers

The TRANSAVER Plus plate and fin design offers excellent cooling efficiency in a compact, space-efficient design.

FEATURES:
* 33% More Efficient than a Comparable Tube & Fin Design
* Pre-Drilled Mounting Plates for Easy Installation
* Internal Turbulation for Efficient Heat Transfer
* 3/8" Push-on Fittings for Quick and Easy Installation

Model #	GVWR	Dimensions	Application	Towing Up To:
1676	Up to 18,000 lbs.	3/4" x 11" x 6"	Sub-compact to Compact cars	
1677	Up to 20,000 lbs.	3/4" x 11" x 7-1/2"	Mid-size and Full-size cars & pick-ups	2,500 lbs.
1678	Up to 24,000 lbs.	3/4" x 11" x 9-1/2"	Pick-ups & Vans Class "C" motor homes	5,000 lbs.
1679	Up to 30,000 lbs	3/4" 11" x 11-5/8"	Class "A" motor homes, Large travel trailers	10,000 lbs.



Remote Transmission Oil Cooling System

FEATURES:
* Available in both (Tube & Fin) and (Plate & Fin) Designs
* Units are Pre-assembled and can be Mounted Remotely or Adjacent to the radiator
* Keeps Transmission Cool Under Extreme Conditions
* Ideal for Trucks, RVs, SUVs, or where Radiator Mounting is not possible

Model #	Dimensions	Fitting
525	3.5" x 11" x 18.5"	9/16"- 18 S.A.E Flare
526	3.5" x 11" x 13.8"	3/8" Push-on

TH350/TH350C

RWD 3 Speed

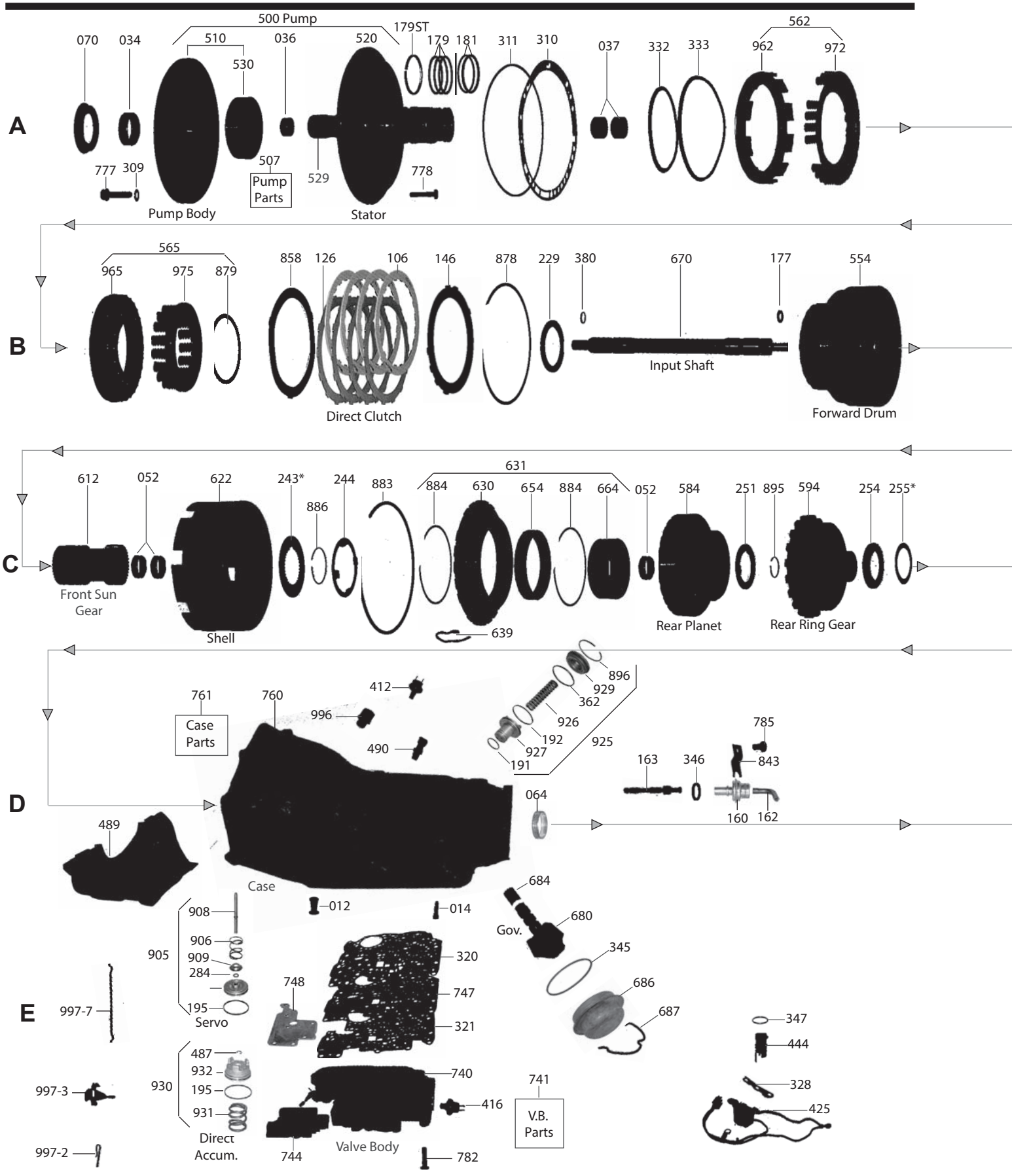

TH350/TH350C

RWD 3 Speed

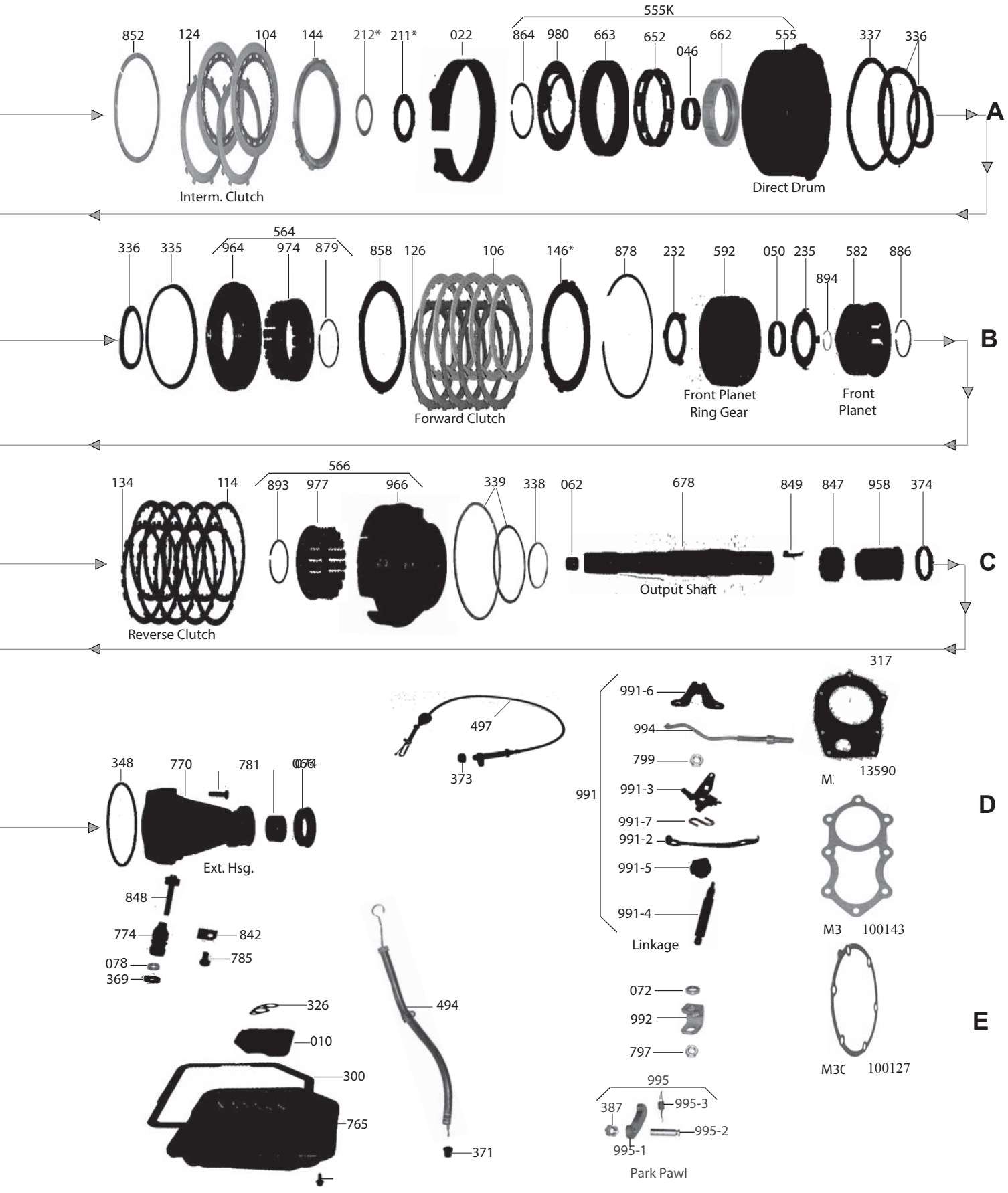

TH350/TH350C/TH250/TH250C

ILL#	DACCO #	DESCRIPTION		REF #
		PAPER & RUBBER KIT		
	K35900-1	Paper & Rubber Kit, [TH250 / 350] 1969-79	1	
	K35900B-1	Paper & Rubber Kit, [TH250C / 350C] 1980-86	1	
	K35900A-1	Paper & Rubber Kit, [TH250 / 250C / 350/ 350C] (Combo) 1969-86	1	
		OVERHAUL KIT		
	K35900	Overhaul Kit, [TH250 / 350] (Short Ring Kit) 1969-79	1	
	K35900R	Overhaul Kit, [TH250 / 350] (Full Ring Kit) 1969-79	1	
	K35900M	Overhaul Kit, [TH250C / 350C] (Short Ring Kit) 1980-86	1	
	K35900MR	Overhaul Kit, [TH250C / 350C] (Full Ring Kit) 1980-86	1	
	K35900Z	Overhaul Kit, [TH250 / 250C / 350 /350C] (Combo) (Full Ring Kit) 1969-86	1	
		MASTER L/STEEL KIT		
	DK3500-S	Master L/Steel Kit, [TH250 / 350] (Short Ring Kit) 1969-79	1	
	DK3500R-S	Master L/Steel Kit, [TH250 / 350] (Full Ring Kit) 1969-79	1	
	DK3500M-S	Master L/Steel Kit, [TH350C] (Short Ring Kit) 1980-86	1	
	DK3500MR-S	Master L/Steel Kit, [TH350C] (Full Ring Kit) 1980-86	1	
	DK3500C-S	Master L/Steel Kit, [TH250 / 350 / 350C] (Combo) (Full Ring Kit) 1969-86	1	
	DK3500Z-S	Master L/Steel Kit, [TH250 / 350 / 350C] (Combo) (Short Ring Kit) 1969-86	1	
	DK3500K-S	Master L/Steel Kit, [TH250C] (Full Ring Kit) 1980-86	1	
	DK3500HP-S	Master L/Steel Kit, [TH350] (Full Ring Kit) (Hi-Performance Red Frictions) 1969-79	1	
		MASTER W/STEEL KIT		
	DK3500	Master W/Steel Kit, [TH250 / 350] (Short Ring Kit) 1969-79	1	
	DK3500R	Master W/Steel Kit, [TH250 / 350] (Full Ring Kit) 1969-79	1	
	DK3500M	Master W/Steel Kit, [TH350C] (Short Ring Kit) 1980-86	1	
	DK3500MR	Master W/Steel Kit, [TH350C] (Full Ring Kit) 1980-86	1	
	DK3500C	Master W/Steel Kit, [TH250 / 350 / 350C] (Combo) (Full Ring Kit) 1969-86	1	
	DK3500HP	Master W/Steel Kit, [TH350] (Full Ring Kit) (Hi-Performance Red Frictions) (Kuline Steels) 1969-79	1	
	DK3500K	Master W/Steel Kit, [TH250C] (Full Ring Kit) 1980-86	1	
	DK3500Z	Master W/Steel Kit, [TH250 / 350 /350C] (Combo) (Short Ring Kit) 1969-86	1	
		FILTER		
010	35710	Filter, [TH250 / 250C / 350 / 350C] (Brass) 1969-86	1	8638816
010	35710A	Filter, [TH250 / 250C / 350 / 350C] (Felt) 1969-86	1	8641443
010	35710B	Filter, [TH250 / 250C / 350 / 350C] (Nylon) 1969-86	1	8640848
		FILTER KIT		
	FK35710	Filter Kit, [TH250 / 250C / 350 / 350C] (Brass) 1969-86	1	
	FK35710A	Filter Kit, [TH250 / 250C / 350 / 350C] (Felt) 1969-86	1	
	FK35710B	Filter Kit, [TH250 / 250C / 350 / 350C] (Nylon) 1969-86	1	
		MISC. FILTERS		
012	35711	Screen, [TH250 / 250C / 350 / 350C] (Pump) 1969-86	1	6261323
014	35712	Screen, [TH250 / 250C / 350 / 350C] (Governor) 1969-86	1-2	8642423
		BANDS		
022	35700	Band, [TH350 / 350C] 1969-86	1	6261132

022	35700A	Band, [TH250 / 250C] (Rigid) 1969-86	1	8641196
022	35700HD	Band, [TH350 / 350C] (Heavy Duty) 1969-86	1	
022	35700K	Band, [TH350 / 350C] (Kevlar) 1969-86	1	
		BUSHINGS		
	K35901	Bushing Kit, [TH250 / 350] 1969-79	1	
	K35901A	Bushing Kit, [TH250C / 350C] 1980-86	1	
034	8005	Bushing, [TH250 / 250C / 350 / 350C] (Pump Body) (Babbitt) 1969-86	1	8623940
036	35007	Bushing, [TH250 / 350] (Stator) (Front) (Without Lock-Up) 1969-79	1	1381366
036	35007A	Bushing, [TH250C / 350C] (Stator) (Front) (With Lock-Up) 1980-86	1	8641073
037	35003	Bushing, [TH250 / 250C / 350 / 350C] (Stator) (Rear) 1969-86	2	6261022
046	35000A	Bushing, [TH250 / 250C / 350 / 350C] (Direct Drum) (Bronze) (Narrow) 1969-86	1	8640099
046	35000B	Bushing, [TH250 / 250C / 350 / 350C] (Direct Drum) (Babbitt) (Wide) (No Oil Groove) 1969-86	1	
046	6015	Bushing, [TH250 / 250C / 350 / 350C] (Direct Drum) (Babbitt) (Wide) (With Oil Groove) 1969-86	1	
050	35006	Bushing, TH[250 / 250C / 350 / 350C] (Input Ring Gear) (Babbit) 1969-86 (Annulus Gear or Hub)	1	8641117
052	35009	Bushing, [TH250 / 250C / 350 / 350C] (Sun Gear & Rear Planet) 1969-86	3	6261033
062	8004	Bushing, [TH250 / 250C / 350 / 350C] (Output Shaft) 1969-86	1	3789034
062	8004D	Bushing, [TH250 / 250C / 350 / 350C] (Output Shaft) (Long) (Heavy Duty) (Bronze) 1969-86	1	
062	8004P	Bushing, [TH250 / 250C / 350 / 350C] (Output Shaft) (Plastic) 1969-86	1	8641058
064	35012	Bushing, [TH250 / 250C / 350 / 350C] (Case) (Babbit) 1969-86	1	8641118
064	35012A	Bushing, [TH250 / 250C / 350 / 350C] (Case) (Bronze) 1969-86	1	
064	30104A	Bushing, [TH250 / 250C / 350 / 350C] (Governor Bore) **(*Use With T-107 Tool)** 1969-86	1	
066	8008	Bushing, [TH250 / 250C / 350 / 350C] (Extension Housing) (Babbit) 1969-86	1	6260048
066	38004	Bushing, [TH250 / 250C / 350 / 350C] (Extension Housing) (Bronze) 1969-86	1	3717682
		METAL CLAD SEALS		
070	38151	Seal, [TH250 / 250C / 350 / 350C] (Front) 1969-86	1	8641826
072	38511	Seal, [TH250 / 250C / 350 / 350C] (Manual Lever) 1969-86	1	8623056
074	8850B	Seal, [TH250 / 250C / 350 / 350C] (Rear) (With Flange) (Without Boot) 1969-86	1	1243402
074	8850A	Seal, [TH250 / 250C / 350 / 350C] (Rear) (No Flange) (Without Boot) 1969-86	1	3932255
074	16695E	Seal, [TH250 / 250C / 350 / 350C] (Rear) (With Flange) (With Long Boot) 1969-86	1	
074	16695ES	Seal, [TH250 / 250C / 350 / 350C] (Rear) (With Flange) (With Short Boot) 1969-86	1	
	35746YS	Seal, [TH250 / 250C / 350 / 350C] (Drive Shaft Yoke Seal)	1	Teckpak
	T350-309	***Yoke Seal Tool Kit & Shaft Yoke Installation Tool**	1	Teckpak
078	38511X	Seal, [TH250 / 250C / 350 / 350C] (Speed-O Shaft) (Metal Clad) 1969-86	1	3869910
078	3991A	Seal, [TH250 / 250C / 350 / 350C] (Speed-O Shaft) (Rubber) (With Spring) 1969-86	1	25519078
078	3991	Seal, [TH250 / 250C / 350 / 350C] (Speed-O Shaft) (Rubber) (Without Spring) 1969-86	1	1240382
		FRICTION CLUTCH		
104	35102	Friction, [TH350 / 350C] (Intermediate Clutch) (.098") 1969-86	2-3	8647522
104	35102G	Friction, [TH350 / 350C] (Intermediate Clutch) (.098") 1969-86 (Graphite)	2-3	
104	35102HP	Friction, [TH350 / 350C] (Intermediate Clutch) (.098") (Hi-Performance Red) 1969-86	2-3	6260058
104	K35102HP	Friction Kit, [TH350 / 350C] (Intermediate Clutch) (.098") (Hi-Performance) (3-Per Kit) 1969-86	1	
104	R35102HP	Friction, [TH350 / 350C] (Intermediate Clutch) (.098") (Stage 1) 1969-86	2-3	
106	35103	Friction, [TH250 / 350 / 350C] (Forward & Direct Clutch) (.098") 1969-86	7-9	6261278
106	35107	Friction, [TH250C] (Forward & Direct Clutch) (.087") 1980-84	7-9	8641268
106	35103G	Friction, [TH350 / 350C] (Forward & Direct Clutch) (.098") (Graphite) (Heavy Duty) 1969-86	7-9	
106	35103HP	Friction, [TH350 / 350C] (Forward & Direct Clutch) (.098") (Hi-Performance Red) 1969-86	7-9	6211278

106	K35103HP	Friction Kit, [TH350 / 350C] (Forward & Direct Clutch) (.098") (Hi-Performance) (9-Per Kit) 1969-86	1	
106	R35103HP	Friction, [TH250 / 350 / 350C] (Forward & Direct) (.098") (Stage 1) 1969-86	7-9	
114	18506	Friction, [TH250 / 350 / 350C] (Low / Reverse Clutch) (.098") 1969-86	4-5	8641512
114	35109	Friction, [TH250C] (Low / Reverse Clutch) (.087") 1980-86	4-5	8640710
114	18506HP	Friction, [TH350 / 350C] (Low / Reverse Clutch) (.098") (Hi-Performance Red) 1969-86	4-5	
114	K18506HP	Friction Kit, [TH350 / 350C] (Low / Reverse Clutch) (.098") (Hi-Performance) (5-Per Kit) 69-86	1	
114	R18506HP	Friction, [TH250 / 350 / 350C] (Low / Reverse Clutch) (.098") (Stage 1) 1969-86	4-5	
	K35100	Friction Module, [TH250 / 350 / 350C] 1969-86	1	
	K35100A	Friction Module, [TH250C] 1980-86	1	
	K35100HP	Friction Module, [TH350 / 350C] (Hi-Performance Red) 1969-86	1	
		STEEL CLUTCH		
124	35104	Steel, [TH350 / 350C] (Intermediate Clutch) (.068") 1969-86	2-3	8640672
124	35104K	Steel, [TH350 / 350C] (Intermediate Clutch) (.068") (Kolene) 1969-86	2-3	8640672K
124	35104X	Steel, [TH350 / 350C] (Intermediate Clutch) (.089") (Oversize) 1969-86	AR	
126	35100	Steel, [TH250 / 250C / 350 / 350C] (Forward & Direct Clutch) (.068") 1969-86	7-9	6261071
126	35100K	Steel, [TH250 / 250C / 350 / 350C] (Forward & Direct Clutch) (.068") (Kolene) 1969-86	7-9	6261071K
126	K35100K	Steel Kit, [TH250 / 250C / 350 / 350C] (Forward & Direct Clutch) (.068") (Kolene) (9-Per Kit) 1969-86	1	
126	35100X	Steel, [TH250 / 250C / 350 / 350C] (Forward & Direct Clutch) (.090") (Oversize) 1969-86	AR	
134	35101	Steel, [TH250 / 250C / 350 / 350C] (Low / Reverse Clutch) (.068") 1969-86	4-5	6261120
134	35101K	Steel, [TH250 / 250C / 350 / 350C] (Low / Reverse Clutch) (.068") (Kolene) 1969-86	4-5	6261120K
134	35101X	Steel, [TH250 / 250C / 350 / 350C] (Low / Reverse Clutch) (.080") (Oversize) 1969-86	AR	
	K35110	Steel Module, [TH250 / 350 / 350C] 1969-86	1	
	K35110A	Steel Module, [TH250C] 1980-86	1	
		CLUTCH PRESSURE PLATES		
144	35717	Pressure Plate, [TH350 / 350C] (Intermediate Clutch) (.300") 1969-86	1	8640673
146	35715	Pressure Plate, [TH250 / 250C / 350 / 350C] (Forward & Direct Clutch) (.245"-.255") 1969-86	1-2	6261072
146	35714	Pressure Plate, [TH250 / 250C / 350 / 350C] (Forward & Direct Clutch) (.275"-.285") 1969-86	1-2	6261349
146	35716	Pressure Plate, [TH250 / 250C / 350 / 350C] (Forward & Direct Clutch) (.310") 1969-86	1-2	6261350
		VACUUM MODULATORS		
160	35820S	Modulator, [TH250 / 250C / 350 / 350C] (Black/Red Stripe) 1969-86	1	3035518
160	35820P	Modulator, [TH250 / 250C / 350 / 350C] (Purple Stripe) 1969-86	1	
160	35820R	Modulator, [TH250 / 250C / 350 / 350C] (Single Red Stripe) 1969-86	1	3035519
160	84820X	Modulator, [TH250 / 250C / 350 / 350C] (Universal Dual Red Stripe) 1969-86	1	8646967
162	13266	Hose, [TH250 / 250C / 350 / 350C] (Modulator) (Elbow) 1969-86	1	
163	35680	Valve, [TH250 / 250C / 350 / 350C] (Under Modulator) 1969-86	1	
		VALVE BODY KITS		
	K35908S	Valve Body Kit, [TH350] 1969-79	1	Superior
	K35908	Valve Body Kit, [TH350 / 350C] (With Plate) 1969-86	1	Transgo
	K35908HP-S	Valve Body Kit, [TH350] (Hi-Perf.) 1969-86	1	Superior
	350-1/2	Reprogramming Kit, [TH350] (Heavy Duty & Competition) 1969-79	1	Transgo
	350C-1/2	Reprogramming Kit, [TH350C] (Heavy Duty & Competition) 1980-86	1	Transgo
	350-3	Reprogramming Kit, [TH350] (Competition Stick Shift) 1969-79	1	Transgo
		OIL SEALING RINGS		
	K35903	Ring Kit, [TH250 / 250C / 350 / 350C] (Short) (*Pump Rings Only) (Metal) (5-Rings) 1969-86	1	

	K35903R	Ring Kit, [TH350 / 350C] (Full) (Metal) (9-Rings) 1969-86	1	
	K35903T	Ring Kit, [TH350 / 350C] (Full) (Teflon) (9-Rings) 1969-86	1	
	K35903K	Ring Kit, [TH250C] (Full) (Metal) 1980-84	1	
177	35307T	Ring, [TH250 / 250C / 350 / 350C] (Input Shaft) (Teflon) 1969-86	1	8640186
179	35300	Ring, [TH250 / 250C / 350 / 350C] (Stator) (Direct Clutch) (Metal) 1969-86	3	6261746
179	35300T	Ring, [TH250 / 250C / 350 /350C] (Stator) (Direct Clutch) (Teflon) 1969-86	3	8640468
181	35301	Ring, [TH250 / 250C / 350 / 350C] (Stator) (Forward Clutch) (Metal) 1969-86	2	6261570
181	35301T	Ring, [TH250 / 250C / 350 / 350C] (Stator) (Forward Clutch) (Teflon) 1969-86	2	8640469
191	35302C	Ring, [TH350 / 350C] (Intermediate Accumulator Piston) (Inner) (Metal) 1969-86	1	6261138
191	35302T	Ring, [TH350 / 350C] (Intermediate Accumulator Piston) (Inner) (Teflon) 1969-86	1	6260257
191	35719-SK	Ring Set, [TH350 / 350C] (Intermediate Accumulator Piston) (10-Inner) (10-Outer Rings) (Teflon)	1	Sonnax
192	35303	Ring, [TH350] (Intermediate Accumulator Piston) (Outer) (Metal) 1969-73	1	6261139
192	35303R	Ring, [TH350 / 350C] (Intermediate Accumulator Piston) (Outer) (Metal) 1974-86	1	6260258
192	35303T	Ring, [TH350 / 350C] (Intermediate Accumulator Piston) (Outer) (Teflon) 1974-86	1	6260258
195	35305	Ring, [TH350] (Intermediate Servo) (Aluminum) 1969-73	1	6261151
195	35305R	Ring, [TH350] (Intermediate Servo) (*Replaces Teflon) (Metal) 1974-79	1	6260320
195	35309	Ring, [TH250 / 250C] (Servo Apply) (1.986”OD) (Metal) 1969-86	1	8641472
195	35305T	Ring, [TH350 / 350C] (Intermediate Servo) (Teflon) 1969-86	1	
		WASHERS & BEARINGS		
	K35907	Washer Kit, [TH250 / 350] 1969-79	1	
	K35907A	Washer Kit, [TH250C / 350C] 1980-86	1	
	K35412	Washer Kit, [TH250 / 250C / 350 / 350C] (Pump Shim Kit) (6-Shims) 1969-86	1	
	K35905	Bearing Kit, [TH250 / 250C / 350 / 350C] 1969-86	1	
211	35400B	Washer, [TH250 / 250C / 350 / 350C] (Stator) (.066”) (#1) 1969-86	1	6261015
211	35400	Washer, [TH250 / 250C / 350 / 350C] (Stator) (.083”) (#2) 1969-86	1	6261013
211	35400A	Washer, [TH250 / 250C / 350 / 350C] (Stator) (.100”) (#3) 1969-86	1	6261014
211	35400C	Bearing, [TH250 / 250C / 350 / 350C] (Stator) 1969-86	1	9436851
212	35412	Shim, [TH250 / 250C / 350 / 350C] (Stator) (.010”) (#1) 1969-86	AR	
212	35412A	Shim, [TH250 / 250C / 350 / 350C] (Stator) (.015”) (#2) 1969-86	AR	
212	35412B	Shim, [TH250 / 250C / 350 / 350C] (Stator) (.020”) (#3) 1969-86	AR	
212	35412C	Shim, [TH250 / 250C / 350 / 350C] (Stator) (.025”) (#4) 1969-86	AR	
212	35412D	Shim, [TH250 / 250C / 350 / 350C] (Stator) (.030”) (#5) 1969-86	AR	
212	35412E	Shim, [TH250 / 250C / 350 / 350C] (Stator) (.035”) (#6) 1969-86	AR	
229	35400C	Bearing, [TH250 / 250C / 350 / 350C] (Direct Drum to Forward Drum) 1969-86	1	8641936
232	35405	Washer, [TH250 / 250C / 350 / 350C] (Forward Drum to Hub) (Metal) 1969-86	1	6261027
232	35405A	Washer, [TH250 / 250C / 350 / 350C] (Forward Drum to Hub) (Plastic) 1969-86	1	8640060
235	35403	Washer, [TH250 / 250C / 350 / 350C] (Front Planet to Hub) 1969-86	1	6260374
235	35403B	Bearing, [TH250 / 250C / 350 / 350C] (Front Planet to Hub) 1969-86	1	9436852
243	35401	Race, [TH250 / 250C / 350 / 350C] (Sun Shell) (Rear) (.210” Thick) (.031” Inner teeth) 1970-86	1	6261034
244	35406	Washer, [TH250 / 250C / 350 / 350C] (Sun Shell to Inner Race) (Metal) 1969-86	1	6261184
244	35406A	Washer, [TH250 / 250C / 350 / 350C] (Sun Shell to Inner Race) (Plastic) 1969-86	1	8642331
251	35402	Washer, [TH250 / 250C / 350 / 350C] (Rear Planet to Support) 1969-E75	1	6261124
251	35402B	Bearing, [TH250 / 250C / 350 / 350C] (Rear Planet to Support) L1975-86	1	1256852
254	35408	Bearing, [TH250 / 250C / 350 / 350C] (Rear Ring Gear to Case) 1969-86	1	8640228
255	35404S	Shim, [TH250 / 250C / 350 / 350C] (Rear) (Output Ring Gear / Case) (.010”) (#1) 1969-86	AR	

255	35404U	Shim, [TH250 / 250C / 350 / 350C] (Rear) (Output Ring Gear / Case) (.020") (#2) 1969-86	AR	
255	35404W	Shim, [TH250 / 250C / 350 / 350C] (Rear) (Output Ring Gear / Case) (.030") (#3) 1969-86	AR	
255	35404X	Shim, [TH250 / 250C / 350 / 350C] (Rear) (Output Ring Gear / Case) (.035") (#4) 1969-86	AR	
255	35404Y	Shim, [TH250 / 250C / 350 / 350C] (Rear) (Output Ring Gear / Case) (.040") (#5) 1969-86	AR	
255	35404Z	Shim, [TH250 / 250C / 350 / 350C] (Rear) (Output Ring Gear / Case) (.045") (#6) 1969-86	AR	
255	K35404	Shim Kit, [TH250 / 250C / 350 / 350C] (Rear) 1969-86	1	
		GASKETS & RUBBER COMPONENTS		
300	13500	Gasket, [TH250 / 250C / 350 / 350C] (Pan) 1969-86	1	6261649
309	13268A	Gasket, [TH250 / 250C / 350 / 350C] (Pump Bolt Washer) 1969-86	8	3884683
310	13532	Gasket, [TH250 / 250C / 350 / 350C] (Pump) 1969-86 (Gasket, Pump Cover to Case)	1	8640671
311	3877V	O-Ring, [TH250 / 250C / 350 / 350C] (Pump) 1969-86 (LCS, Front Pump to Case)	1	6261413
317	13590	Gasket, [TH350 / 350C] (Extension Housing Adapter to 203 Transfer Case) 1973-86	1	335344
317	100143	Gasket, [TH350 / 350C] (Extension Housing Adapter to 205 Transfer Case) 1969-86	1	
317	100127	Gasket, [TH350C] (Extension Housing Adapter to 208 Transfer Case) 1981-86	1	
320	13525	Gasket, [TH250 / 350] (Upper) (Valve Body) 1969-79	1	330189
320	13527	Gasket, [TH250C / 350C] (Upper) (Valve Body) 1980-86	1	8641470
321	13525A	Gasket, [TH250 / 350] (Lower) (Valve Body) 1969-79	1	330190
321	13528	Gasket, [TH250C / 350C] (Lower) (Valve Body) 1980-86	1	8641421
326	13501	Gasket, [TH250 / 250C / 350 / 350C] (Filter) 1969-86	1	6261235
328	3411	Gasket, [TH250C / 350C] (Solenoid) 1980-86	1	8641824
332	13551	Lip Seal, [TH350 / 350C] (Intermediate Clutch) (Inner) 1969-86	1	6261079
333	13550	Lip Seal, [TH350 / 350C] (Intermediate Clutch) (Outer) 1969-86	1	6261080
335	3643	Lip Seal, [TH250 /250C / 350 / 350C] (Forward Clutch) (Outer) 1969-86	1	8623101
336	13562	Lip Seal, [TH250 / 250C / 350 / 350C] (Forward & Direct Clutch) (Inner) 1969-86	2	6261053
336	13561	Lip Seal, [TH250 / 250C / 350 / 350C] (Direct Clutch) (Outer) 1969-86	1	6261055
337	3679	Lip Seal, [TH250 / 250C / 350 / 350C] (Direct Clutch) (Center) 1969-86	1	6261054
338	3773	Lip Seal, [TH250 / 250C / 350 / 350C] (Low / Reverse Clutch) (Inner) 1969-86	1	3812830
339	3774	Lip Seal, [TH250 / 250C / 350 / 350C] (Low / Reverse Clutch) (Outer) 1969-86	1	3812831
339	13536	Lip Seal, [TH250 / 250C / 350 / 350C] (Low / Reverse Clutch) (Center) 1969-86	1	8637772
345	13515	O-Ring, [TH250 / 250C / 350 / 350C] (Governor Cover) 1969-86	1	1241734
346	3410	O-Ring, [TH250 / 250C / 350 / 350C] (Modulator) 1969-86	1	
347	3410	O-Ring, [TH250C / 350C] (Electrical Connector) 1969-86	1	
348	3896	O-Ring, [TH250 / 250C / 350 / 350C] (Extension Housing to Case) 1969-86	1	1358899
362	13520	O-Ring, [TH350 / 350C] (Intermediate Accumulator Cover) (*For Steel Cover) 1969-86	1	338926
368	3126	O-Ring, [TH250 / 250C / 350 / 350C] (Speed-O Housing) (1.750"OD) (Black) 1969-86	1	6264904
369	13583	O-Ring, [TH250 / 250C / 350 / 350C] (Speed-O Housing) (2.000"OD) (Purple) 1969-86	1	25501478
369	3410	O-Ring, [TH250 / 250C / 350 / 350C] (Speed-O Housing) (.750"OD) 1969-86	1	6264903
371	3291	O-Ring, [TH250 / 350] (Filler Tube) 1969-79	1	6264902
371	3292	Boot, [TH250C / 350C] (Filler Tube) 1980-86 (Top Hat)	1	1259475
373	13580	O-Ring, [TH250 / 350] (Detent Cable) 1969-79	1	6264901
373	13581	Boot, [TH250C / 350C] (Detent Cable) 1980-86 (Top Hat)	1	1262475
374	13538	O-Ring, [TH250 / 250C / 350 / 350C] (Output Shaft Yoke Sleeve to Yoke) 1969-86	1	3764601
376	76521	O-Ring, [TH350C] (Solenoid to Valve Body) 1980-86	1	8630052
380	13503	O-Ring, [TH250C / 350C] (Input Shaft) (Pilot) 1980-86 (Turbine Shaft)	1	8630049
	K35900-2	External Seal Kit, [TH250 / 250C / 350 / 350C] (With Pan Gasket) 1969-86	1	
		TECHNICAL MANUALS		
	TM350C	Tech Manual, [TH350 / 350C]	1	ATSG

		ELECTRICAL COMPONENTS		
412	14035121	Switch, [TH350C] (3rd Clutch) (Pressure) 1980-86	1	14035121
416	35634	Switch, [TH250C / 350C] (Governor) (34 PSI) 1980-86	1	
416	35640	Switch, [TH250C / 350C] (Governor) (40 PSI) 1980-86	1	8648060
416	35644	Switch, [TH250C / 350C] (Governor) (44 PSI) (Pink) 1980-86	1	8648062
416	35646	Switch, [TH250C / 350C] (Governor) (46 PSI) (Silver) 1980-86	1	8648063
416	35648	Switch, [TH250C / 350C] (Governor) (48 PSI) (Orange) 1980-86	1	8648064
416	35650	Switch, [TH250C / 350C] (Governor) (50 PSI) (White) 1980-86	1	8648065
416	35652	Switch, [TH250C / 350C] (Governor) (52 PSI) (Brown) 1980-86	1	8648066
416	35654	Switch, [TH250C / 350C] (Governor) (54 PSI) (Blue) 1980-86	1	8648067
416	35600	Switch, [TH250 / 250C / 350 / 350C] (Spark Control) (1-Prong) 1969-86	1	6462514
416	35602	Switch, [TH250 / 250C / 350 / 350C] (Spark Control) (3-Prong) 1969-86	1	3996287
416	35601	Switch, [TH250 / 250C / 350 / 350C] (Spark Control) (2-Prong) 1969-86	1	6462549
425	35610U	Solenoid, [TH350C] (Universal) 1980-86	1	Rostra
442	K77912	Universal Adjustment Vaccum Switch, [TH350C] (1” to 6” of Vaccum)	1	Superior
442	K77912A	Universal Adjustment Vaccum Switch, [TH350C] (6” to 22” of Vaccum)	1	Superior
444	65609	Connector, [TH250C / 350C] (Case) (2-Prong) (Oval) (Spade Type) 1980-86	1	12300205
444	77983	Connector, [TH250C / 350C] (Case) (3-Prong) (Square) (Pin Type) 1980-86	1	8634383
444	84983	Connector, [TH350C] (Case) (4-Prong) (Square) 1980-86	1	8662395
449	35756	Ground Strap, [TH250 / 250C / 350 / 350C] (14” Long) 1969-86	1	
449	35756A	Ground Strap, [TH250 / 250C / 350 / 350C] (42” Long) 1969-86	1	
		MISC. COMPONENTS		
	30130	E-Clip, (GM)	2	
	35800	Grommet, (GM Linkage) (Round) (Plastic) (White)	1	
	65800	Grommet, (GM Linkage) (Round) (Rubber) (Black) (With Nylon Insert)	1	1605083
	30136	M- Hitch Pins	1	
489	K35803U	Dust Cover, [TH350] (Universal) 1969-86	1	Teckpak
490	35910	Vent Tube, (GM) (Plastic)	1	8640496
494	3999	Filler Tube Repair Kit, [TH350] 1969-86	1	
494	K35999R	Filler Tube Repair End, [TH350]	1	Teckpak
494	K35999U	Filler Tube & Dip Stick, [TH350] (*Fitz All) 1969-86	1	Teckpak
497	K35951	Detent Cable, [TH250 / 250C / 350 / 350C] (43” Wire) (OEM Style) 1969-86	1	Teckpak
497	K35955B	Detent Cable, [TH250 / 250C / 350 / 350C] (40-1/2” Wire) (OEM Style) 1969-86	1	
497	AS1-01K	Detent Cable Corrector Kit, [TH250 / 250C / 350 / 350C] (Teardrop Style Connector) 1969-86	1	Sonnax
497	K35955CE	Detent Cable Repair End,(Teardrop Style Connector-Bulk) (With Slot) 1969-86	1	Teckpak
497	K35909U	Repair End, [TH350] (Detent Cable) & (250 Conversion End) 1969-86	1	
	77872-02K	TV Cable Rebuild Kit, [TH350] (Cable With Ends) **(*Customer Reuses Housing)**	1	Sonnax
	AS3-03K	Linkage Plate, [TH350] (TV Bracket For Edelbrock Carburator)	1	Sonnax
	AS2-02K	Linkage Plate, [TH350] (TV Bracket For Holley Carburator)	1	Sonnax
497	K35955U	Detent Cable, [TH250 / 250C / 350 / 350C] (Universal) 1969-86	1	Teckpak
		HARD PARTS		
500	35912W	Pump, [TH350] (Washer Type) (With 5-Ring Stator) 1969-79	1	6264919
500	35912T	Pump, [TH350] (Bearing Type) (With 6-Ring Stator) 1969-79	1	
500	35914A	Pump, [TH350C] 1980-86	1	
500	35914	Pump, [TH250] 1969-79	1	
500	35914B	Pump, [TH250C] 1980-86	1	

510	35916A	Pump Body, [TH350] 1969 Only*	1	
510	35916	Pump Body, [TH350] L1969-79	1	8641911
510	35919	Pump Body, [TH250C / 350C] 1980-86	1	8641590
510	35916	Pump Body, [TH250] 1969-79 (*Same as 350)	1	
520	35913	Stator, [TH350] (Washer Type) 1969-79	1	14033581
520	35913A	Stator, [TH350] (Bearing Type) (6-Rings) 1969-79	1	
520	35913B	Stator, [TH350] (Bearing Type) (6-Rings) 1969-79 (*Use 35913A)	1	
520	35915A	Stator, [TH350C] 1980-86	1	14022147
520	35915	Stator, [TH250] 1969-79	1	
520	35915B	Stator, [TH250C] 1980-86	1	
		PUMP COMPONENTS		
530	K35201A	Pump Gear Set, [TH250 / 350] (.721" Thick) 1969-79	1	
530	K35201C	Pump Gear Set, [TH250 / 350] (.723" Thick) 1969-79	1	
530	K35201	Pump Gear Set, [TH250 / 350] (.725" Thick) 1969-79	1	
530	K35201B	Pump Gear Set, [TH250 / 350] (.727" Thick) 1969-79	1	
530	K35201X	Pump Gear Set, [TH250 / 350] (.730" Thick) (Oversized) 1969-79	1	
530	K35201E	Pump Gear Set, [TH250C / 350C] (.841" Thick) 1980-86	1	8641422
530	K35201F	Pump Gear Set, [TH250C / 350C] (.843" Thick) 1980-86	1	8641426
530	K35201G	Pump Gear Set, [TH250C / 350C] (.845" Thick) 1980-86	1	8641429
530	K35201GX	Pump Gear Set, [TH250C / 350C] (.850" Thick) (Oversized) 1980-86	1	
		HARD PARTS (Continued)		
554	35733D	Drum, [TH350 / 350C] (Forward Clutch) (Without Input Shaft) 1969-86	1	360943
555	35716D	Drum, [TH350 / 350C] (Direct Clutch) (With CAM) 1969-86	1	8640307
555	35716D2	Drum, [TH250 / 250C] (Direct Clutch) (Without CAM) 1969-86	1	14019950
555	K35716D	Drum, [TH350 / 350C] (Direct Clutch) (With Sprag) 1969-86	1	
562	K35719	Piston Kit, [TH350 / 350C] (Intermediate Clutch) (3-Clutch Type) 1969-86	1	356826
564	K35707	Piston Kit, [TH250 / 250C / 350 / 350C] (Forward Clutch) (5-Clutch Type) 1969-86	1	
565	K35718A	Piston Kit, [TH350 / 350C] (Direct Clutch) (5-Clutch Type) 1969-86	1	
565	K35718	Piston Kit, [TH250 / 250C / 350 / 350C] (Direct Clutch) (4-Clutch Type) 1969-86	1	
566	K35736	Piston Kit, [TH250 / 250C / 350 / 350C] (Low / Reverse Clutch) (5-Clutch Type) 1969-86	1	
582	35747	Planet, [TH250 / 250C / 350 / 350C] (Front) (Washer Type) 1969-86	1	1250023
582	35747A	Planet, [TH250 / 250C / 350 / 350C] (Front) (Bearing Type) 1969-86	1	
584	35731	Planet, [TH250 / 250C / 350 / 350C] (Rear) 1969-86	1	6261645
592	35713	Ring Gear, [TH250 / 250C / 350 / 350C] (Front) (Planet) (Washer Type) 1969-86 (Input Ring Gear)	1	6261401
592	35713A	Ring Gear, [TH250 / 250C / 350 / 350C] (Front) (Planet) (Bearing Type) 1969-86	1	
594	35730	Ring Gear, [TH250 / 250C / 350 / 350C] (Rear) (Planet) (Washer Type) 1969-86	1	1250022
594	35730A	Ring Gear, [TH250 / 250C / 350 / 350C] (Rear) (Planet) (Bearing Type) 1969-86	1	
612	35748	Sun Gear, [TH250 / 250C / 350 / 350C] 1969-86	1	6260185
622	35749	Shell, [TH250 / 250C / 350 / 350C] (With Sun Gear) 1969-86	1	1241726
630	35729	Center Support, [TH250 / 250C / 350 / 350C] (Outer Race) 1969-86	1	8663094
631	K35727	Center Support Assembly, [TH250 / 250C / 350 / 350C] 1969-86	1	
639	35735	Clip, [TH250 / 250C / 350 / 350C] (Center Support) (*Anti-Clunk Spring) 1969-86	1	6261415
		SPRAGS & ONE WAY CLUTCHES		
652	35724	Sprag, [TH350 / 350C] (Intermediate) 1969-86	1	7471025
654	35727	Sprag, [TH250 / 250C / 350 / 350C] (Low / Reverse) (Metal) 1969-86	1	7471020

662	35726L	Inner Race, [TH350 / 350C] (Intermediate Sprag) 1969-86	1	
663	35723	Outer Race, [TH350 / 350C] (Intermediate Sprag) (OE Type) 1969-86	1	6261021
663	35723HD	Outer Race, [TH350 / 350C] (Intermediate Sprag) (Heavy Duty) 1969-86	1	
664	35726	Inner Race, [TH250 / 250C / 350 / 350C] (Low / Reverse Sprag) 1969-86	1	8673300
		HARD PARTS (Continued)		
670	35733S	Input Shaft, [TH250 / 350] (Bushing Type) 1969-79	1	14033579
670	35733T	Input Shaft, [TH250 / 350] (Teflon Ring Type) 1977-79	1	25505774
670	35733L	Input Shaft, [TH250C / 350C] 1980-86	1	14024301
678	35737	Output Shaft, [TH250 / 250C / 350 / 350C] (15-1/2" Long) 1969-86	1	8641076
678	35738A	Output Shaft, [TH250 / 250C / 350 / 350C] (18-1/2" Long) 1969-86	1	8641084
678	35738	Output Shaft, [TH250 / 250C / 350 / 350C] (22" Long) 1969-86	1	
678	35738C	Output Shaft, [TH350] (4x4) (9-5/8" Long) 1969-79	1	8641088
678	35738D	Output Shaft, [TH350C] (4x4) (12" Long) 1983-86	1	
678	35739	Output Shaft, [TH350C] (4x4) (14" Long) 1980-82	1	8641440
680	35410	Governor, [TH250 / 250C / 350 / 350C] 1969-86	1	464200
681	K35413	Governor Kit, [TH250 / 250C / 350 / 350C] (Springs & Weights) 1969-86	1	Superior
684	K35411	Gear Kit, [TH250 / 250C / 350 / 350C] (Governor) 1969-86	1	6261660
686	35409	Cover, [TH250 / 250C / 350 / 350C] (Governor) 1969-86	1	8667827
687	77412	Retainer/Bale Clip, [TH250 / 250C / 350 / 350C] (Governor Cover) 1969-86	1	6260040
		VALVE BODIES (REBUILT)		
740	GM-4612	Valve Body, [TH350] (Non Lock-Up) 1969-86	1	
740	GM-4613	Valve Body, [TH350C / TH250C] (Lock-Up) 1980-86	1	
		VALVE BODIES		
740	35754	Valve Body, [TH350] 1969-79	1	
740	35754A	Valve Body, [TH350C] 1980-86	1	
740	35754B	Valve Body, [TH250C] 1980-86	1	
		VALVE BODY COMPONENTS		
741	13924X	Check Ball, [TH250 / 205C / 350 / 350C] (Valve Body) (.250") (Steel) 1969-86	4	6261179
741	13924	Check Ball, [TH250 / 205C / 350 / 350C] (Valve Body) (.250") (Viton) 1969-86	4	
741	35683	Valve, [TH350] (Manual) 1969-79	1	1394763
741	35754-01K	Boost Valve Kit, [TH350] (Valve & Sleeve) 1969-86	1	Sonnax
		HARD PARTS (Continued)		
744	35754C	Auxiliary Valve Body, [TH350C] 1980-86	1	8641068
747	35999	Plate, [TH350] (Valve Body) 1969-79	1	14008963
747	35999A	Plate, [TH350] (Valve Body) (Stamped E) 1969-79	1	8641418
747	35999B	Plate, [TH350] (Valve Body) (Stamped UUU) 1969-79	1	8641467
747	35999C	Plate, [TH350C] (Valve Body) 1980-86	1	
748	35999D	Support, [TH350] (Valve Body) (Seperator Plate) 1969-79	1	1256695
748	35999E	Support, [TH350C] (Valve Body) (Seperator Plate) 1980-86	1	
760	35701	Case, [TH350] (Chevy) (Non Lock-Up) 1969-79	1	
760	35701M	Case, [TH350] (Buick, Olds, Pontiac) 1969-79	1	
760	35701G	Case, [TH350] (Chevy) (4x4) (*Uses 6-Bolt Aluminum Dust Cover) 1969-79	1	
760	35701H	Case, [TH350C] (Chevy) (4x4) (*Uses 6-Bolt Aluminum Dust Cover) 1980-86	1	
760	35701U	Case, [TH350] (Unibell) 1969-79	1	
760	35701L	Case, [TH350C] (Chevy) 1980-86	1	

760	35701P	Case, [TH350C] (Buick, Olds, Pontiac) 1980-86	1	
760	35701N	Case, [TH350C] (Unibell) 1980-86	1	
760	35701X	Case, [TH350] (Monza) 1969-75	1	
760	35701W	Case, [TH250C] (Unibell) 1980-84	1	
760	35701T	Case, [TH250C] (Chevy) 1980-84	1	
760	35701S	Case, [TH250C] (Buick, Olds, Pontiac) 1980-84	1	
760	35701V	Case, [TH250] (Vega) 1972-75 and 1979	1	
		CASE COMPONENTS		
761	K35354	Case Saver, [TH250 / 250C / 350 / 350C] (4-Piece Type) 1969-86 (4 Per Kit)	1	
761	35350	Case Saver, [TH250 / 250C / 350 / 350C] (1-Piece Type) 1969-86	1	
761	K77701S	Case Saver, [TH250 / 350 / 350C] (Center Support Modification) 1969-86	1	
		HARD PARTS (Continued)		
765	35801	Pan, [TH250 / 250C / 350 / 350C] (Without Drain Plug) 1969-86	1	8641537
765	35801A	Pan, [TH250 / 250C / 350 / 350C] (With Drain Plug) 1969-86	1	8641376
770	35759	Extension Housing, [TH250 / 250C / 350 / 350C] (2WD) (6” Long) (With 2” Speed-O Hole) 1969-86	1	
770	35761	Extension Housing, [TH250 / 250C / 350 / 350C] (2WD) (6” Long) (With 7/8” Speed-O Hole) 1969-86	1	
770	35761A	Extension Housing, [TH350 / 350C] (2WD) (6” Long) (With 7/8” Speed-O Hole) (With 2-Mounting Holes for Differential Support Bracket) (*To Change 200 to 350) (Vega Type)	1	
770	35765	Extension Housing, [TH250 / 250C / 350 / 350C] (2WD) (9” Long) (With 7/8” Speed-O Hole) 1969-86	1	
770	35760	Extension Housing, [TH350 / 350C] (2WD) (12-1/4” Long) (With 2” Speed-O Hole) 1969-86	1	
770	35763	Extension Housing, [TH350 / 350C] (2WD) (12-1/4” Long) (With 7/8” Speed-O Hole) 1969-86	1	
770	35766A	Extension Housing, [TH350 / 350C] (4x4) (*Fits 208 Transfer Case) 1969-86	1	
770	35766	Extension Housing, [TH350 / 350C] (4x4) (*Fits 203 Transfer Case) 1973-80	1	
770	35766B	Extension Housing, [TH350 / 350C] (4x4) (*Fits 205 Transfer Case) 1969-80	1	
774	35922	Speed-O Housing, [TH250 / 250C / 350 / 350C] (7/8” Steel Chevy “Bullett”) 1969-86	1	25513247
774	35922A	Speed-O Housing, [TH250 / 250C / 350 / 350C] (200 /C, 350 BOP) 1969-86	1	345215
774	35923	Speed-O Housing, [TH250 / 350] (2” Aluminum) (*For 36T-39T Plastic Shaft Gear) 1969-79	1	
774	35923A	Speed-O Housing, [TH250C / 350C] (2” Plastic) (*For 34T-39T Plastic Shaft Gear) 1980-86	1	
774	35923B	Speed-O Housing, [TH250C / 350C] (2” Plastic) (*For 40T-45T Plastic Shaft Gear) 1980-86	1	
774	35923C	Speed-O Housing, [TH250 / 350] (2” Aluminum) (*For 40T-43T Plastic Shaft Gear) 1969-79	1	
775	N63	Converter Nut, [TH250 / 250C / 350 / 350C] (Coarse Thread) (No Flange) 1969-86	3	
775	B63	Converter Bolt, [TH250 / 250C / 350 / 350C] (Coarse Thread) (With Flange) 1969-86	3	
775	B78	Converter Bolt, [TH250C / 350C] (Metric RWD) 1980-86	3	
775	B64	Converter Bolt, [TH250 / 250C / 350 / 350C] (Coarse Thread) (No Flange) 1979-86	3	
839	34996	Magnet, [TH250 / 250C / 350 / 350C] (Pan) (Rectangular) 1969-86	1	
843	35994A	Bracket, [TH250 / 250C / 350 / 350C] (Holds Modulator in) 1969-86	1	6261285
843	35994	Bracket, [TH250 / 250C / 350 / 350C] (Modulator Repair Bracket) 1969-86	1	
846	K35775	Bracket, [TH250 / 250C / 350 / 350C] (4x4) (*For Use of a 6-Bolt Cover on 4-Bolt Case) 69-86	1	
847		Gear, [TH350] (Speed-O Drive) **(*See GM Speed-O Gear Chart)**	1	
848		Gear, [TH350] (Speed-O Driven) **(*See GM Speed-O Gear Chart)**	1	
849	35741	Clip, [TH250 / 250C / 350 / 350C] (Speed-O Drive Gear) (Long Narrow Type) 1969-86	1	2513329

849	35744	Clip, [TH250 / 250C / 350 / 350C] (Speed-O Drive Gear) (Short Wide Type) 1969-86	1	
852	35750	Cushion, [TH350 / 350C] (Intermediate Clutch) 1969-86	1	1243139
858	35705	Cushion, [TH350 / 350C] (Direct Clutch) 1969-86 (*Also Fits 250C Forward & Direct Clutch)	2	8640176
	K35928	Snap Ring Kit, [TH350 / 350C] 1969-86	1	32680
864	35728	Snap Ring, [TH350 / 350C] (Holds Intermediate Sprag to Direct Drum) 1969-86	1	6261038
878	35551	Snap Ring, [TH250 / 250C / 350 / 350C] (Holds Forward & Direct Pressure Plate in Drum) 1969-86	2	6261048
879	35553	Snap Ring, [TH250 / 250C / 350/ 350C] (Holds Retainer to Forward & Direct Drum) 1969-86	2	6261037
883	35552	Snap Ring, [TH250 / 250C / 350 / 350C] (Holds Center Support to Case) 1969-86	1	6261416
884	35560	Snap Ring, [TH250 / 250C / 350 / 350C] (Holds Sprag to Center Support) 1969-86	2	6261051
886	35554	Snap Ring, [TH250 / 250C / 350 /350C] (Holds Sun Gear to Shell) 1969-86	2	6261066
893	35555	Snap Ring, [TH250 / 250C / 350 / 350C] (Holds Reverse Clutch Retainer to Case) 1969-86	1	6261041
894	35500	Snap Ring, [TH250 / 250C / 350 / 350C] (Holds Front Planet to Output Shaft) 1969-86	1	6261039
895	35556	Snap Ring, [TH250 / 250C / 350 / 350C] (Holds Rear Planet to Output Shaft) 1969-86	1	6261040
896	35557	Snap Ring, [TH350 / 350C] (Holds Intermediate Accumulator Cover on) 1969-86	1	6260138
905	K35706	Servo Assembly, [TH250 / 250C] (Intermediate) 1969-86	1	
905	K35706A	Servo Assembly, [TH350 / 350C] (Intermediate) 1969-86	1	
906	35750B	Spring, [TH250 / 250C] (Intermediate Servo) (White) 1969-86	1	8640745
907	35706	Piston, [TH250 / 250C] (Intermediate Servo) 1969-86	1	342494
925	K35704	Accumulator Assembly, [TH350 / 350C] (Intermediate) 1969-86	1	
926	35703	Spring, [TH350 / 350C] (Intermediate Accumulator) (Orange) 1969-86	1	6261140
926	35703A	Spring, [TH250] (Intermediate Accumulator) (No Color) 1969-79	1	6261333
927	35704	Piston, [TH35 0/ 350C] (Intermediate Accumulator) 1969-86 (2-Ring)	1	1239836
929	35988	Cover, [TH350 / 350C] (Intermediate Accumulator) (Steel) 1969-86	1	1243476
930	K35708	Accumulator Assembly, [TH350 / 350C] (Direct) 1969-86	1	
931	35702	Spring, [TH350 / 350C] (Direct Accumulator) 1969-86	1	6261612
932	35708	Piston, [TH350 / 350C] (Direct Accumulator) 1969-86	1	1243383
933	35718-01K	Pin Kit, [TH350 / 350C] (Direct Accumulator) 1969-86 (4 Per Kit)	1	Sonnax
933	35718-02K	Starter Pin Kit, [TH350 / 350C] (Direct Accumulator) 1969-86	1	Sonnax
958	35746	Yoke Tube, [TH250 / 250C / 350 / 350C] (Tin) 1969-86	1	6261062
962	35719	Piston, [TH350 / 350C] (Intermediate Clutch) (3-Clutch) 1969-86	1	
964	35707	Piston, [TH250 / 250C / 350 / 350C] (Forward Clutch) (5-Clutch) 1969-86	1	8640071
965	35718A	Piston, [TH350 / 350C] (Direct Clutch) (5-Clutch) 1969-86	1	
965	35718	Piston, [TH250 / 250C / 350 / 350C] (Direct Clutch) (4-Clutch) 1969-86	1	6260196
966	35736	Piston, [TH250 / 250C / 350 / 350C] (Low / Reverse Clutch) (5-Clutch) 1969-86 (V-8)	1	344212
966	35736A	Piston, [TH250 / 250C / 350 / 350C] (Low / Reverse Clutch) (4-Clutch) 1969-86 (6 Cyl)	1	
972	K35720	Retainer W/Spring, [TH350 / 350C] (Intermediate Clutch) 1969-86	1	1243139
974	K35722	Retainer W/Spring, [TH250 / 250C / 350 / 350C] (Forward Clutch) 1969-86	1	1242722
975	K35721	Retainer W/Spring, [TH250 / 250C / 350 / 350C] (Direct Clutch) 1969-86	1	8640005
977	K35734	Retainer W/Spring, [TH250 / 250C / 350 / 350C] (Low / Reverse Clutch) 1969-86	1	6260382
980	35143	Retainer, [TH350 / 350C] (Intermediate Sprag) 1969-86	1	6261143
991	K35676	Linkage Assembly, [TH250 / 250C / 350 / 350C] (Internal) 1969-86 (*Uses “S” Type Link)	1	
991	K35676A	Linkage Assembly, [TH250 / 250C / 350 / 350C] (Internal) 1969-86 (*Uses “Z” Type Link)	1	
991	35997	Rooster Comb, [TH250 / 250C / 350 / 350C] (Internal) (Range Selector) 1969-86	1	330136
991	35997B	Shift Lever Shaft, [TH250 / 250C / 350 / 350C] (Goes Thru Case) 1969-86	1	470107
992	35675A	Shift Lever, [TH250 / 250C / 350 / 350C] (External) 1969-86	1	
994	35677	Park Rod, [TH250 / 250C / 350 / 350C] (Actuator) 1969-86	1	8641818

995	K35678	Park Pawl Assembly, [TH350] (With Coil Spring)	1	
995	K35678A	Park Pawl Assembly, [TH350] (With Wire Type Spring)	1	
995	35678	Park Pawl, [TH250 / 250C / 350 / 350C] (Hinges Inside Case) 1969-86	1	6261657
995	35678S	Spring, [TH250 / 250C / 350 / 350C] (Parking Pawl Release) (Hinges Inside Case) 1969-86	1	6260253
996	35280	Fitting, [TH250 / 250C / 350 / 350C] (Cooler Line) (Pipe Thread) 1969-77	2	
996	35281	Fitting, [TH250 / 250C / 350 / 350C] (Cooler Line) (Machine Thread) 1978-86	2	
997	35725	Hair Pin, [TH350 / 350C] (Detent Lever Actuator) 1969-86	1	6161288
997	35933	Link, [TH250 / 250C / 350 / 350C] (Detent Wire) 1969-86	1	1243133

New from BorgWarner!



Resistance is futile.

New from BorgWarner: Part No. 50155 Replacement EPC Solenoid
Fits Ford/Mazda transmissions 4R44E/4R55E/5R44E/5R55E

Derived from a proven "force motor" design used in millions of transmissions, BorgWarner's EPC replacement solenoid greatly reduces your risk of stuck spool valve conditions associated with our competitor's "direct acting" design. The internal moving parts of BorgWarner's solenoid core are made of hardened steel for incredible durability, and the hydraulic section is made of precision machined aluminum, anodized to resist wear and contamination, with a filtered inlet and outlet for added protection.



BorgWarner carries a full line of ready to ship OEM quality clutch plates, transmission bands, one-way clutches, and electronic transmission solenoids that are 100% guaranteed to fit your rebuilds.

Over time, normal transmission wear adds contaminates to transmission fluid, which may cause the spool valve movement of our competitor's OE design to become sluggish and output pressures imprecise, resulting in poor shifts, slippage, and high line pressure problems.

By contrast, BorgWarner's larger internal spool valve is moved with hydraulic force, developing more than **THREE TIMES THE FORCE** of the OE design to plow through debris to meter oil flow properly. Calibrated to ensure smooth and durable operation, and verified by extensive field testing, BorgWarner's EPC solenoid is the unbeatable choice for robust performance against transmission fluid contamination.

Call your authorized distributor today and ask for genuine OEM quality solenoids from the global leader in automatic transmission technology... BorgWarner, Inc.

BorgWarner Inc. Transmission Systems
1350 N. Greenbriar Dr. Unit B
Addison, IL 60101
(630) 261-9980
www.borgwarner.com

BorgWarner

feel good about driving

TH400 (3L80)

RWD 3 Speed

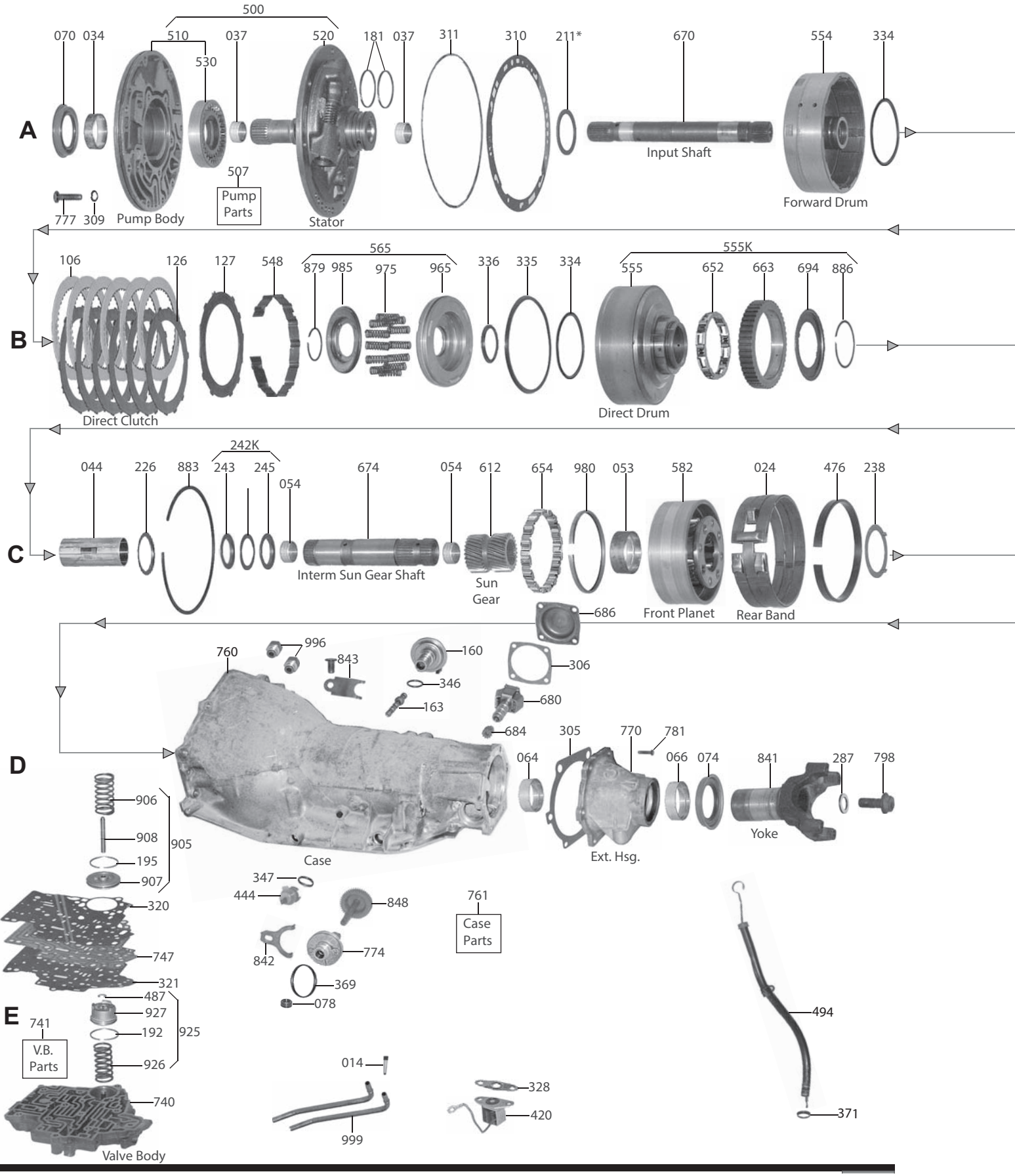

TH400 (3L80)

RWD 3 Speed

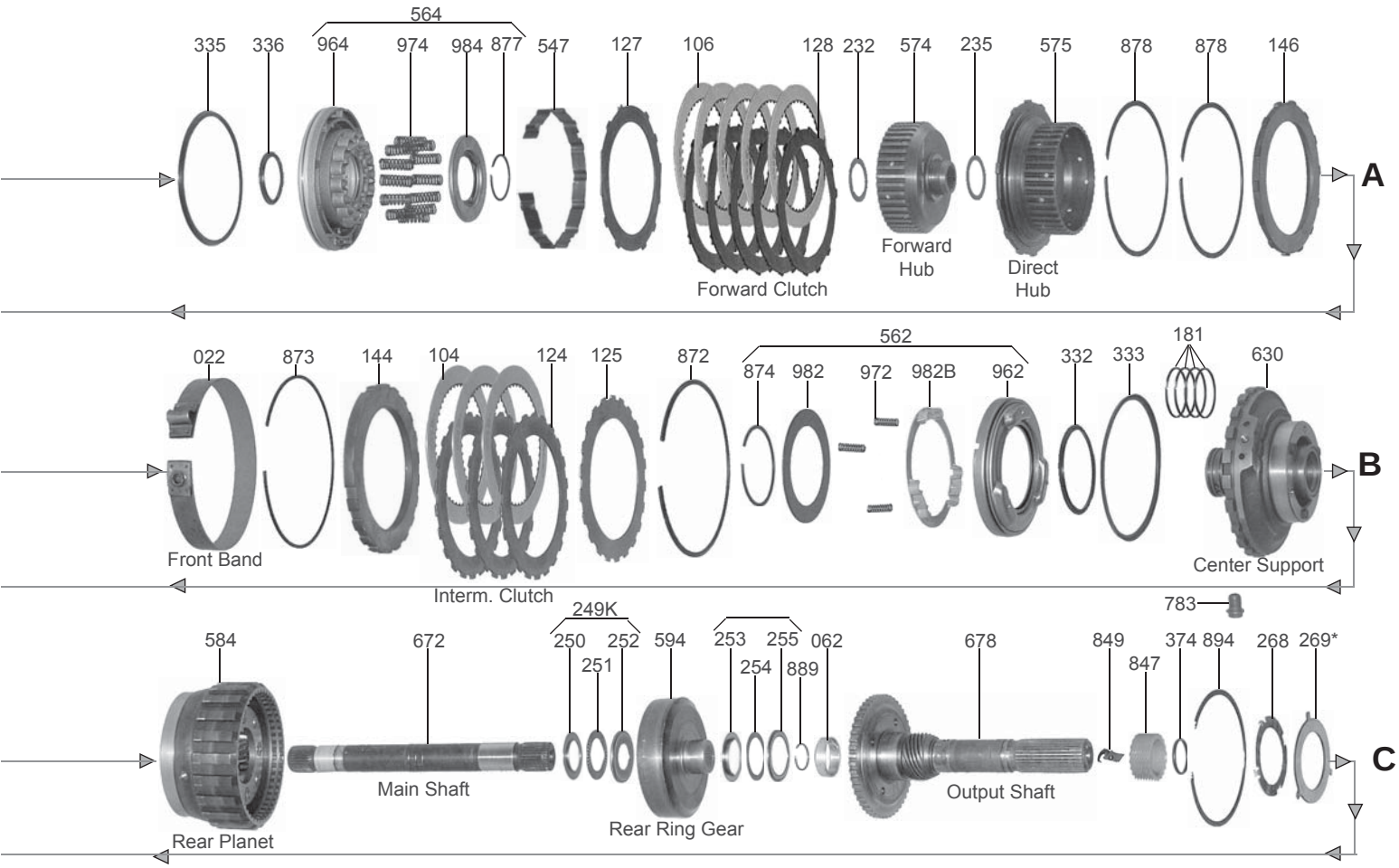

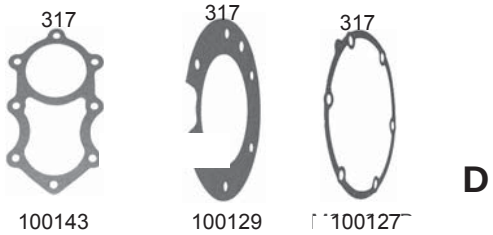

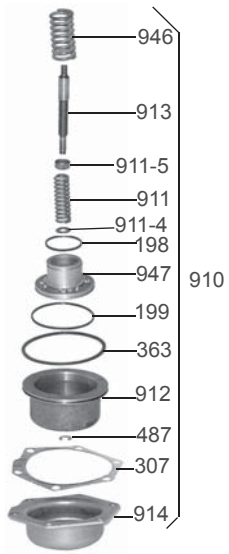

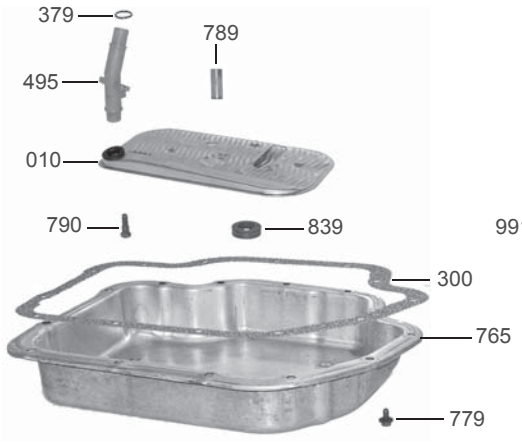

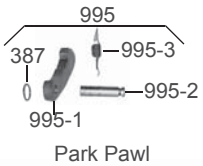

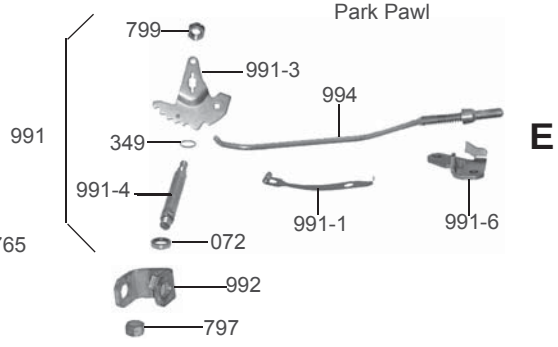

4L80E/4L85E

RWD 4 Speed

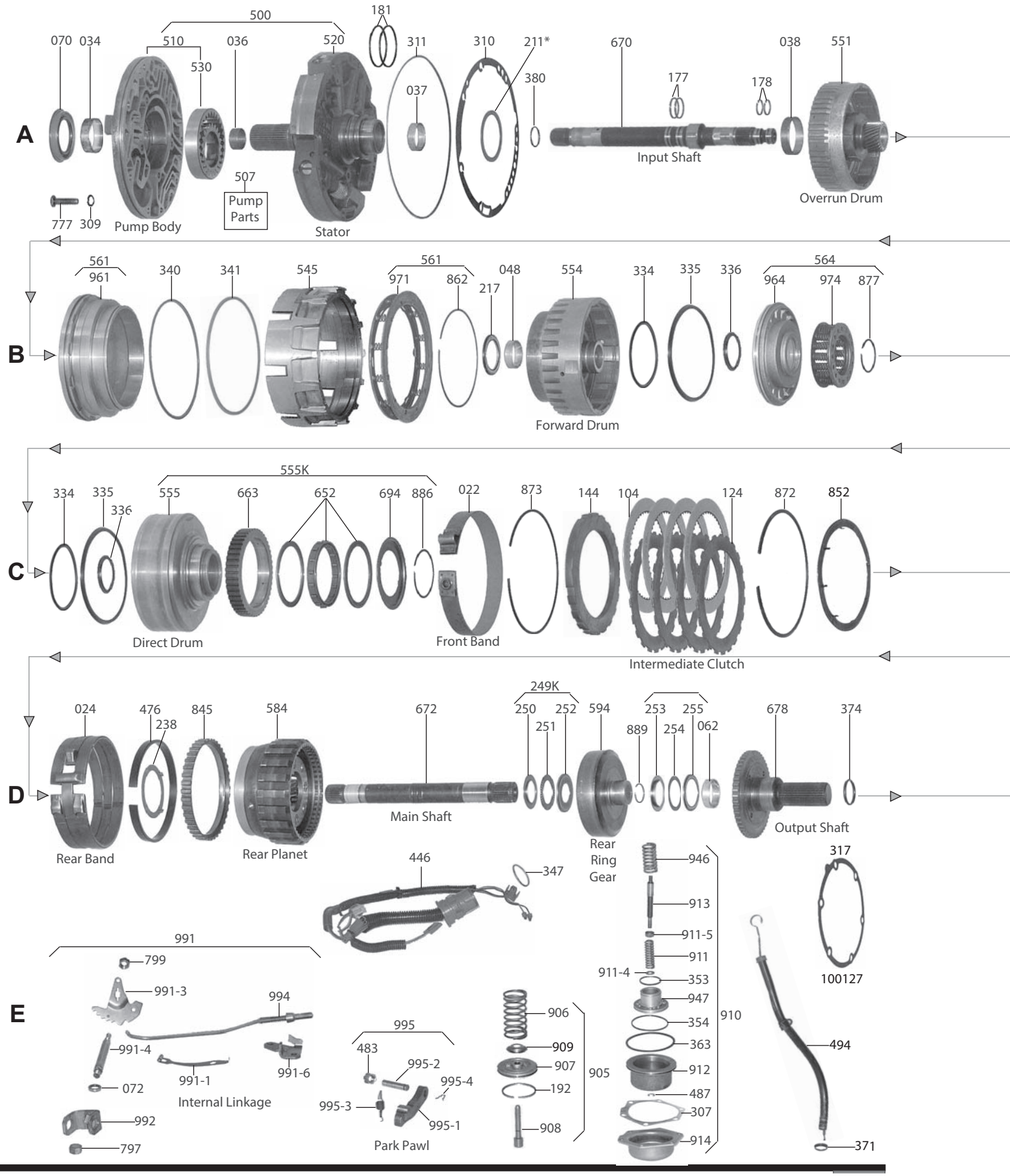

RWD 4 Speed

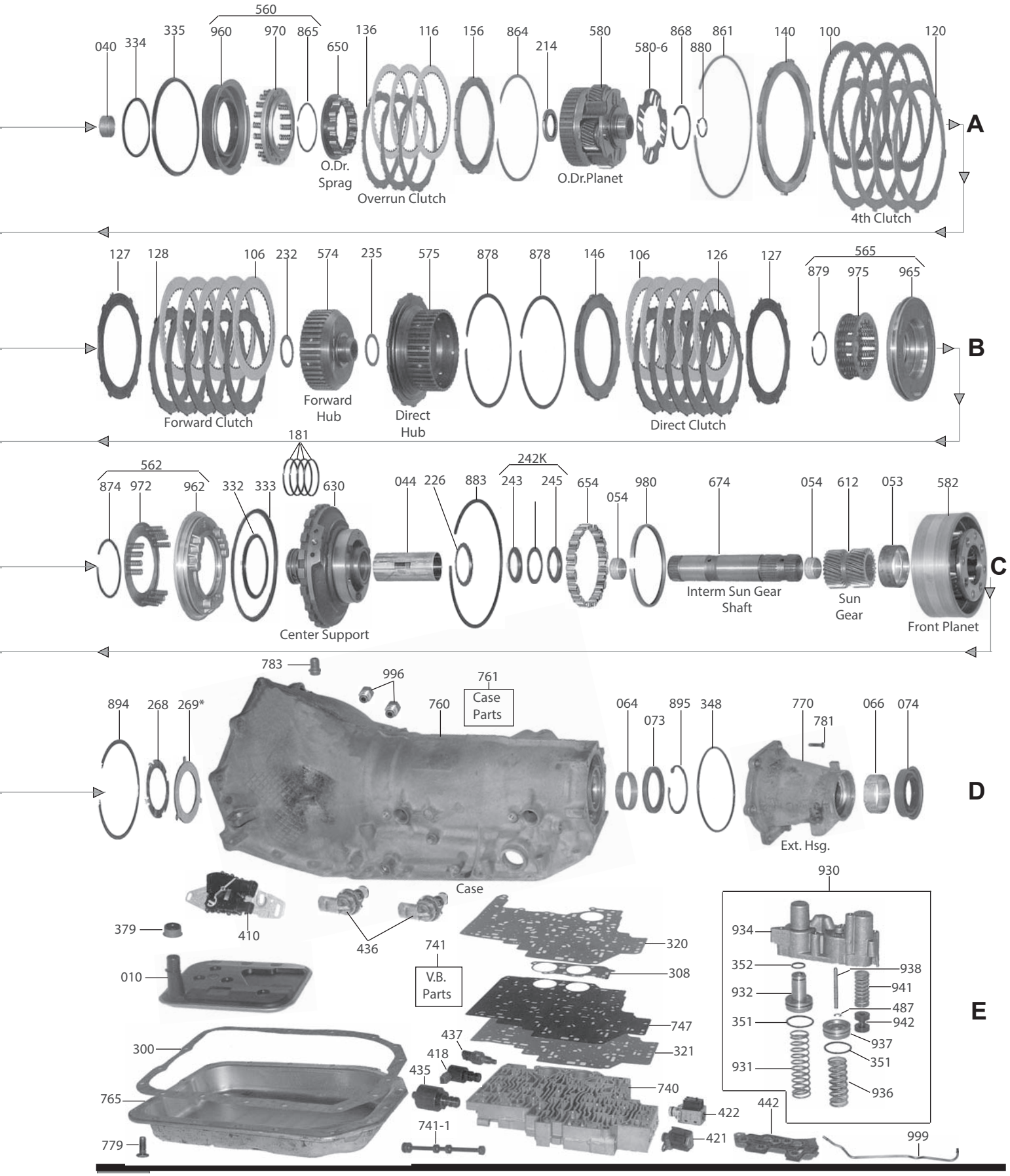
A
040
334
335
560
960
970
865
650
136
116
156
864
214
580
580-6
868
880
861
140
100
120
O.Dr. Sprag
Overrun Clutch
O.Dr.Planet
4th Clutch
B
127
128
106
232
574
235
575
878
878
146
106
126
127
565
879
975
965
Forward Clutch
Forward Hub
Direct Hub
Direct Clutch
C
562
874
972
962
181
332
333
630
044
226
883
242K
243
245
654
054
980
674
054
612
053
582
Center Support
Interm Sun Gear Shaft
Sun Gear
Front Planet
D
783
996
761
Case Parts
760
894
268
269*
064
073
895
348
770
781
066
074
Case
Ext. Hsg.
E
930
934
352
938
932
941
487
351
942
937
351
931
936
379
410
436
741
V.B. Parts
320
308
747
321
740
010
300
765
779
437
418
435
741-1
422
421
442
999

TH400 (3L80)/4L80E/4L85E

ILL#	PART#	DESCRIPTION	QTY	REF #
		OVERHAUL KIT		
	K34900A	Overhaul Kit, [TH400] (Short Ring Kit) 1965-Up	1	
	K34900C	Overhaul Kit, [TH400] (Full Ring Kit) 1965-Up	1	
	K34900E	Overhaul Kit, [4L80E] 1991-96	1	
	K34900G	Overhaul Kit, [4L80E] (Without Pistons) 1997-Up	1	
	K34900GP	Overhaul Kit, [4L80E] (With Pistons) 1997-Up	1	
	K34900F	Overhaul Kit, [TH425] 1966-78	1	
		MASTER L/STEEL KIT		
	DK3400A-S	Master L/Steel Kit, [TH400] (Short Ring Kit) 1965-Up	1	
	DK3400R-S	Master L/Steel Kit, [TH400] (Full Ring Kit) 1965-Up	1	
	DK3400HD-S	Master L/Steel Kit, [TH400] (Full Ring Kit) (With Waffle Frictions) 1965-Up	1	
	DK3400E-S	Master L/Steel Kit, [4L80E] 1991-96	1	
	DK3400G-S	Master L/Steel Kit, [4L80E] (Without Pistons) 1997-Up	1	
	DK3400GP-S	Master L/Steel Kit, [4L80E] (With Pistons) 1997-Up	1	
	DK3400F-S	Master L/Steel Kit, [TH425] 1966-78	1	
		MASTER W/STEEL KIT		
	DK3400A	Master W/Steel Kit, [TH400] (Short Ring Kit) 1965-Up	1	
	DK3400R	Master W/Steel Kit, [TH400] (Full Ring Kit) 1965-Up	1	
	DK3400HD	Master W/Steel Kit, [TH400] (Full Ring Kit) (With Waffle Frictions) 1965-Up	1	
	DK3400E	Master W/Steel Kit, [4L80E] 1991-96	1	
	DK3400G	Master W/Steel Kit, [4L80E] (Without Pistons) 1997-Up	1	
	DK3400GP	Master W/Steel Kit, [4L80E] (With Pistons) 1997-Up	1	
	DK3400F	Master W/Steel Kit, [TH425] 1966-78	1	
		FILTER		
010	34661	Filter, [TH400] 1964-E67	1	5579822
010	34661A	Filter, [TH400] (Flat) (Felt) L1967-Up	1	8637741
010	34661C	Filter, [TH400] (Flat) (Brass) L1967-Up	1	
010	34661E	Filter, [4L80E] 1991-96	1	8678757
010	34661F	Filter, [4L80E] (Deep Pan) (With 4-Raised Projections) 1997-Up	1	24204277
010	34661B	Filter, [TH425] 1966-78	1	6438336
		FILTER KIT		
	FK34661	Filter Kit, [TH400] 1964-E67	1	
	FK34661A	Filter Kit, [TH400] (Flat) (Felt) L1967-Up	1	
	FK34661C	Filter Kit, [TH400] (Flat) (Brass) L1967-Up	1	
	FK34661E	Filter Kit, [4L80E] 1991-96	1	
	FK34661J	Filter Kit, [4L80E] (Jaguar) 1991-96	1	
	FK34661F	Filter Kit, [4L80E] (Deep Pan) (With 4-Raised Projections) 1997-Up	1	
	FK34661B	Filter Kit, [TH425] 1966-78	1	
		MISC. FILTERS		
	34665	Screen, [TH400] (Governor) (Tapered) 1964-Up	1	8627509
	34663	Screen, [4L80E] (Force Motor / Pressure Control) 1991-Up	1	8685041

	34664	Screen, [4L80E] (Shift Solenoid) 1991-Up	1	8661709
	34662	Screen, [4L80E] (TCC / PWM Solenoid) 1991-Up	1	8661834
		BANDS		
022	34325	Band, [TH400 / TH425] (Front) (1" Wide) 1964-Up (*Also Fits [4L80E] 1991-98)	1	8675578
022	34325A	Band, [TH400 / 4L80E] (Front) (Heavy Duty) (1.25" Wide) 1964-Up	1	24210080
024	34510HD	Band, [TH400 / TH425 / 4L80E] (Rear) (Reverse) (Kevlar Lining) 1964-Up	1	24202229
024	34510	Band, [TH400 / 4L80E] (Rear) (Reverse) (New Design) (Smooth Lining) 1964-Up	1	8677313
		BUSHINGS		
	K34903	Bushing Kit, [TH400] 1964-Up	1	
	K34903E	Bushing Kit, [4L80E] 1991-96	1	
	K34903F	Bushing Kit, [4L80E] 1997-03	1	
	K34903G	Bushing Kit, [4L80E] 2004-Up	1	
034	8005	Bushing, [TH400] (Pump) (Babbit) 1964-Up	1	8623940
034	8005A	Bushing, [TH400] (Pump) (Bronze) 1964-Up	1	
034	8005E	Bushing, [4L80E] (Pump) (OE Style) (Narrow .575") 1991-96	1	8682195
034	8005F	Bushing, [4L80E] (Pump) (Babbit) (Wide .700") 1997-Up	1	24205783
036	34016	Bushing, [4L80E] (Stator Support) (Front) 1991-Up	1	8683008
036	34016-W	Bushing, [4L80E] (Stator Support) (Front) (Extra Wide) 1991-Up (*Prevents No Overdrive)	1	Sonnax
037	34002	Bushing, [TH400] (Stator Support) (Front & Rear), (*Also [TH400 / 4L80E] Sun Gear Shaft), (*Also [4L80E] (Overrun Drum) (Rear, Small) 1964-Up	3-5	8623944
037	34017	Bushing, [4L80E] (Stator Support) (Rear) 1991-Up	1	8681614
038	34002E	Bushing, [4L80E] (Overrun Drum) (Front) (2.001"OD) 1991-Up	1	8661604
040	34002	Bushing, [TH400 / 4L80E] (Overrun Drum) (Rear) 1964-Up	1	8623944
044	34003	Bushing, [TH400] (Center Support) 1964-Up	1	8623942
044	34003E	Bushing, [4L80E] (Center Support) 1991-96	1	8655622
044	34003F	Bushing, [4L80E] (Center Support) (4.02" Long) (With 3-Holes) 1997-Up	1	24203510
048	34013	Bushing, [4L80E] (Forward Drum) 1991-Up	1	8661284
053	34008	Bushing, [TH400 / 4L80E] (Front Planet) (Rear Drum) 1964-Up	1	8623192
054	34002	Bushing, [TH400 / 4L80E] (Sun Gear Shaft) (No Groove) 1964-Up	2	8623944
054	34002A	Bushing, [4L80E] (Sun Gear Shaft) (With 4-ID Grooves) 1997-Up	2	27207201
062	34004	Bushing, [TH400] (Output Shaft) (Wide) 1964-74	1	8623943
062	34004A	Bushing, [TH400 / 4L80E] (Output Shaft) (Narrow) 1970-Up	1	8653985
064	34006	Bushing, [TH400] (Case) 1964-Up	1	8623941
064	34006E	Bushing, [4L80E] (Rear) (Case) (OE Style) 1991-Up	1	8677221
064	34006-SP	Bushing, [TH400 / 4L80E] (Case) (No Walk Out) 1964-Up	1	Sonnax
064	34006-OS	Bushing, [4L80E] (Case) (OE Style) (Bronze) 1993-Up	1	
064	30104A	Bushing, [TH400] (Governor Bore) 1964-Up (***Use With T-0107***)	1	
066	34005A	Bushing, [TH400] (Extension Housing) (1.995"OD) (1-1/2" long) 1964-Up	1	8623966
066	8008	Bushing, [TH400] (Extension Housing) (1.626"OD) (Babbit) (375 *Only) 1972-76	1	6260048
066	4008	Bushing, [TH400] (Extension Housing) (1.795"OD) (1-1/4" long) 1964-Up	1	8619943
066	34005B	Bushing, [TH400] (Extension Housing) (1.995"OD) (1" long) (Bolt Yoke) 1964-Up	1-2	8626901
066	34005E	Bushing, [4L80E] (Extension Housing) 1991-03	1	8661368
066	34005F	Bushing, [4L80E] (Extension Housing) 2004-Up	1	
		METAL CLAD SEALS		
070	38151	Seal, [TH400 / TH425] (Front) 1964-Up	1	8641826
070	34151	Seal, [4L80E] (Front) 1991-Up	1	8661602
072	38511	Seal, [TH400 / 4L80E] (Linkage Shaft) 1964-Up	1	8623056

TH400 (3L80)/4L80E/4L85E

073	34551	Seal, [4L80E] (Case) (Rear Lube) 1991-Up	1	8675517
074	34743A	Seal, [TH400 / 4L80E] (Rear) (2.705"OD) (1.829"ID) (Large, Truck Type) (Without Boot) 1964-Up	1	8626009
074	34743C	Seal, [TH400] (Rear) (2.50" OD) (1-11/16"ID) (Medium, Car Type) 1964-Up	1	8625892
074	8850B	Seal, [TH400] (Rear) (Small, 375 Type) 1964-Up	1	3871649
074	8850A	Seal, [TH400] (Rear) (Small, 375 Type) (With Flange) (With Short Boot) 1964-Up	1	1251450
074	34743B	Seal, [TH475] (Rear) (2.887"OD) (2.100"ID) 1984-Up	1	8655032
074	34743B	Seal, [4L80E] (Rear) (2.887"OD) (2.100"ID) (With Brake Assembly) (Without Flange) 91-Up	1	8675731
074	21111	Seal, [TH400 / 4L80E] (Rear) (2.887"OD) (With Brake Assembly) (With Flange)	1	
074	34743E	Seal, [4L80E] (Rear) (With Boot) 1991-Up	1	8677463
078	3991A	Seal, [TH400] (Speed-O Shaft) (With Spring) 1964-Up	1	25519078
078	3991	Seal, [TH400] (Speed-O Shaft) (Without Spring) 1964-Up	1	1240382
079	34153	Seal, [4L80E] (Cooler Line Fitting to Center Support) 1997-Up	1	24203511
		FRICTION CLUTCH		
100	34103	Friction, [4L80E] (4th Clutch) (.080") 1991-Up	4	8682802
100	34404	Friction, [TH400 / TH425] (Intermediate Clutch) (.080") (Waved) 1964-Up	4	
104	34404HD	Friction, [TH400 / TH425] (Intermediate Clutch) (.080") (Waffle) 1964-Up	3	8655620
104	34404HP	Friction, [TH400 / 4L80E] (Intermediate Clutch) (.080") (Hi-Performance Red) 1964-95	3	
104	34404C	Friction, [4L80E] (Intermediate Clutch) (.080") (Flat) 1991-Up	3	8675521
104	34404E	Friction, [4L80E] (Intermediate Clutch) (.071") (High Energy) (Kevlar) 1996-Up	4-5	24202966
104	R34404EHP	Friction, [4L80E] (Intermediate Clutch) (.070") (Stage 1) 1996-Up	4-5	24242966
104	K34404EHP	Friction Kit, [4L80E] (Intermediate Clutch) (.080") (Flat) (Hi-Performance Red.) 1991-Up	1	
106	34304	Friction, [TH400 / TH425 / 4L80E] (Forward & Direct Clutch) (.080") (Smooth) 1964-Up	10-11	8655619
106	34304X	Friction, [TH400] (Forward & Direct Clutch) (Thin) (.061") 1964-Up	AR	
106	34304HE	Friction, [TH400 / 4L80E] (Forward & Direct) (.080") (High Energy) (Smooth)	10-11	
106	34304F	Friction, [4L80E] (Forward & Direct Clutch) (High Energy) (Graphite) 1996-Up	10-11	24202646
106	34304XHP	Friction, [TH400] (Forward & Direct) (Thin) (.061") (Hi-Performance Red) 1964-Up	AR	
106	34304A	Friction, [TH400] (Forward & Direct Clutch) (.080") (Parallel Grooved) 1964-Up	10-11	
106	34304B	Friction, [TH400] (Forward & Direct Clutch) (.080") (Waffle) (Heavy Duty) 1964-Up	10-11	8625300
106	34304HP	Friction, [TH400 / 4L80E] (Forward & Direct Clutch) (.080") (Hi-Performance Red) 1964-Up	10-11	
116	34102	Friction, [4L80E] (Overrun Clutch) (.080") 1991-Up	3	8661571
116	34102HP	Friction, [4L80E] (Overrun Clutch) (.080") (Hi-Performance Red) 1991-Up	3	
	K34100A	Friction Module, [TH400] 1964-Up	1	
	K34100E	Friction Module, [4L80E] 1991-96	1	
	K34100G	Friction Module, [4L80E] 1997-Up	1	
	K34100HP	Friction Module, [TH400] (Hi-Performance Red) 1964-Up	1	
		STEEL CLUTCH		
120	34104	Steel, [4L80E] (4th Clutch) (.099") 1991-96	4	8661579
120	34104A	Steel, [4L80E] (4th Clutch) (With 4-Turbulator Holes) 1997-Up	4	24204283
124	34405	Steel, [TH400 / TH425] (Intermediate Clutch) (.100") (Flat) 1964-Up	3	8655621
124	34405E	Steel, [4L80E] (Intermediate Clutch) (.076") 1991-Up	4	8675522
124	34405EK	Steel, [4L80E] (Intermediate Clutch) (.076") (Kolene) 1991-Up	4	
125	34420	Steel, [TH400 / 4L80E] (Intermediate Clutch) (.070") (Waved) 1964-Up	1	8624199
126	34305C	Steel, [TH400 / TH425 / 4L80E] (Direct Clutch) (.090") 1964-Up	4	8625197
126	34305H	Steel, [TH400 / TH425 / 4L80E] (Forward & Direct Clutch) (.060") (Commercial) 1964-Up	AR	
126	34305XK	Steel Kit, [TH400 / 4L80E] (Forward & Direct) (.060") (Kolene) (6 Per Kit) 1964-95	1	

126	34305CK	Steel, [TH400 / TH425 / 4L80E] (Forward & Direct Clutch) (.090") (Kolene) 1964-Up	8	
127	34305B	Steel, [TH400] (Forward & Direct Clutch) (.060") (Waved) 1967-Up	1	8679940
127	34305	Steel, [TH400] (Forward & Direct Clutch) (.068") (Waved) 1964-66	1	8623113
127	34305D	Steel, [TH400 / 4L80E] (Forward & Direct Clutch) (.054") (Dished) 1964-98	1	8680816
127	34305E	Steel, [4L80E] (Forward & Direct Clutch) (.042") (12 Teeth) (8-Waves) 1997-Up	1	24205559
127	34305F	Steel, [4L80E] (Forward & Direct Clutch) (.042") (6 Teeth) (7-Waves) 1997-Up	1	24205560
127	34305G	Steel, [4L80E] (Forward & Direct Clutch) (.042") (14 Teeth) (6-Waves) 1997-Up	1	24205561
128	34305A	Steel, [TH400 / TH425 / 4L80E] (Forward Clutch) (.077") (Flat) 1964-Up	5	8623849
128	34305AK	Steel, [TH400 / TH425 / 4L80E] (Forward Clutch) (.077") (Flat) (Kolene) 1964-Up	5	
136	34101	Steel, [4L80E] (Overrun Clutch) (.099") 1991-96	3	8661569
136	34101A	Steel, [4L80E] (Overrun Clutch) (With 7-Turbulator Holes) 1997-Up	3	24204287
	K34110A	Steel Module, [TH400] 1964-Up	1	
	K34110HP	Steel Module, [TH400] (Hi-Performance) (Kolene) 1964-Up	1	
	K34110F	Steel Module, [TH425] 1966-78	1	
	K34110E	Steel Module, [4L80E] 1991-96	1	
	K34110G	Steel Module, [4L80E] 1997-Up	1	
		CLUTCH PRESSURE PLATES		
140	34482	Pressure Plate, [4L80E] (4th Clutch) (8-Lugs) 1991-98	1	8661582
140	34482A	Pressure Plate, [4L80E] (4th Clutch) (2-Lugs) 1999-Up	1	24205818
144	34422	Pressure Plate, [TH400] (Intermediate Clutch) (.431") 1964-Up	1	8623152
144	34422E	Pressure Plate, [4L80E] (Intermediate Clutch) (.366") (Dished) 1991-98	1	8675519
144	34422F	Pressure Plate, [4L80E] (Intermediate Clutch) (.275") (Flat) 1999-Up	1	24205827
146	34421	Pressure Plate, [TH400 / 4L80E] (Direct Clutch) 1964-Up	1	8661575
146	34421E	Pressure Plate, [4L80E] (Direct Clutch) 1991-Up	1	8675557
156	34473	Pressure Plate, [4L80E] (Overrun Clutch) 1991-Up	1	8661573
		MODULATORS		
	7-40M	Modulator, [TH400] (Mechanical)	1	Teckpak
160	35820S	Modulator, [TH400] (Black / Red Stripe) 1964-Up	1	3035518
160	35820P	Modulator, [TH400] (Purple) 1964-Up	1	
160	35820R	Modulator, [TH400] (Red Stripe) (Single) 1964-Up	1	3035519
160	84820X	Modulator, [TH400] (Red Stripe) (Universal) (Dual) (400 & 440 COMBO) 1964-Up	1	8646956
161	K35820X	Adapter Assembly, [TH400] (AMC/Jeep) (Modulator, Elbow, Brackets, Pin) 1964-Up (*Keeps Modulator Away From Driveshaft)	1	
162	13266	Hose, [TH400] (Modulator) 1964-Up	1	
163	34680	Valve, [TH400] (Under Modulator) 1964-Up	1	
		VALVE BODY KITS		
	K34908S	Valve Body Kit, [TH400] 1964-Up	1	Superior
	K34908	Valve Body Kit, [TH400] 1964-Up	1	Transgo
	K34908R	Valve Body Kit, [TH400] (Reverse Cushion Kit) 1964-Up	1	Transgo
	K400-WP	Valve Body Kit, [TH400] (With Plate) 1964-Up	1	Superior
	K34908E-S	Valve Body Kit, [4L80E] 1991-Up	1	Superior
	K34908E	Valve Body Kit, [4L80E] 1991-Up	1	Transgo
	K34877	Ring Kit, [4L80E] (Ring & End Play Kit) 1991-Up	1	Transgo
	K34908A	Valve Body Kit, [TH425] 1966-78	1	Transgo
	400-1/2	Reprogramming Kit, [TH400] (Heavy Duty & Competition) 1964-Up	1	Transgo
	4L80E-HD2	Reprogramming Kit, [4L80E] (Heavy Duty & Competition) 1991-Up	1	Transgo
	400-PRO	Reprogramming Kit, [TH400] (Pro Race / Heavy Duty / Super Show Off) 1965-Up	1	Transgo

TH400 (3L80)/4L80E/4L85E

	400-3	Reprogramming Kit, [TH400] (Competition Stick Shift) 1964-Up	1	Transgo
	4L80E-3	Reprogramming Kit, [4L80E] (Competition Stick Shift-Full Manual Control) 1991-Up	1	Transgo
		OIL SEALING RINGS		
	K34901M	Ring Kit, [TH400 / TH425] (Short) (Pump & Center Support) (Metal) 1964-Up	1	
	K34901MT	Ring Kit, [TH400 / TH425] (Short) (Pump & Center Support) (Teflon) 1964-Up	1	
	K34901C	Ring Kit, [TH400 / TH425] (Full) (Metal) 1964-Up	1	
	K34901T	Ring Kit, [TH400 / TH425] (Full) (Teflon) 1964-Up	1	
	K34901E	Ring Kit, [4L80E] (Teflon) (With Solid Pump & Center Support Rings) 1991-96	1	
	K34901F	Ring Kit, [4L80E] (With Peek Rings) 1997-Up (Scarf Cut) (Pump & Center Support Rings) (*Retros to 1991)	1	
177	34715T	Ring, [4L80E] (Turbine Shaft to Stator Support) (Metal) 1991-Up	2	8637170
178	34120	Ring, [TH400] (Turbine Shaft) (With Variable Pitch) (Metal) 1964-78	1	8623296
178	34716T	Ring, [4L80E] (Turbine Shaft to Forward Drum) (Metal) 1991-Up	2	8661893
181	34406	Ring, [TH400 / TH425] (Front) (Stator & Center Support) (Metal) 1964-98	6	8623148
181	34406T	Ring, [TH400 / TH425] (Front) (Stator & Center Support) (Teflon) 1964-Up	6	8626356
181	34714T	Ring, [4L80E] (Stator) (Teflon) 1991-Up	2	8661789
181	34714A	Ring, [4L80E] (Stator) (Peek Material) (*Retro-Fit to 1991) 1998-Up	2	24205833
181	34713T	Ring, [4L80E] (Center Support) (Teflon) 1991-97	4	8675729
181	34713A	Ring, [4L80E] (Center Support) (Peek Material) (*Retro-Fit to 1991) 1998-Up	4	24205722
192	34711	Ring, [TH400 / TH425] (Front) (Accumulator Piston) (Outer) (Metal) 1964-Up	1	8623653
192	34711T	Ring, [TH400 / TH425] (Front) (Accumulator Piston) (Outer) (Teflon) 1964-Up, (*Also [4L80E] (Front Servo Piston) (Teflon) 1991-Up	1	
195	34310	Ring, [TH400] (Front) (Servo Piston) (Metal) 1964-Up	1	8626423
	34711	Ring, [4L80E] (Front) (Servo Piston) (Metal) 1991-Up	1	8623131
195	34310T	Ring, [TH400] (Front) (Servo Piston) (Teflon) 1964-Up	1	8626423
	34711T	Ring, [4L80E] (Front) (Servo Piston) (Teflon) 1991-Up	1	8623131
198	34710A	Ring, [TH400] (Rear) (Accumulator) (Inner) (Metal) 1964-Up	1	8623671
198	34710T	Ring, [TH400 / 4L80E] (Rear) (Accumulator) (Inner) (Teflon) 1964-Up	1	8623671
353	34567	Lathe Cut Seal, [TH400 / 4L80E] (Rear) (Accumulator) (Inner) (Rubber) 1991-Up	1	8661647
199	34710B	Ring, [TH400] (Rear) (Accumulator) (Outer) (Metal) 1964-70	1	8623672
199	34712R	Ring, [TH400 / 4L80E] (Rear) (Accumulator) (Outer) (Metal) 1971-Up	1	8627153
199	34712T	Ring, [TH400 / 4L80E] (Rear) (Accumulator) (Outer) (Teflon) 1971-Up	1	8627153
354	34658	Lathe Cut Seal, [TH400 / 4L80E] (Rear) (Accumulator) (Outer) (Rubber) 1991-Up	1	
		WASHERS & BEARINGS		
	K34907	Washer Kit, [TH400] 1964-Up	1	
	K34907E	Washer Kit, [4L80E] (Without selectives) 1991-Up	1	
	K34907A	Bearing Kit, [TH400] 1964-Up [4L80E] 1991-96)	1	
	K34907B	Bearing Kit, [4L80E] 1997-Up	1	
	K34907F	Washer Kit, [4L80E] (Stator) (5-Selectives) 1991-Up	1	
211	34208	Washer, [TH400] (Stator) (.062") 1964-Up (Yellow)	1	8623300
211	34208A	Washer, [TH400] (Stator) (.073") 1964-Up (Blue)	1	8623301
211	34208B	Washer, [TH400] (Stator) (.084") 1964-Up (Red)	1	8623302
211	34208C	Washer, [TH400] (Stator) (.095") 1964-Up (Brown)	1	8623303
211	34208D	Washer, [TH400] (Stator) (.106") 1964-Up (Green)	1	8623304
211	34208E	Washer, [TH400] (Stator) (.117") 1964-Up (Black)	1	8623305
211	34208F	Washer, [TH400] (Stator) (.128") 1964-Up (Purple)	1	8623306
211	34602	Washer, [4L80E] (Pump) (.059") 1991-Up (Blue)	1	8677571

211	34602A	Washer, [4L80E] (Pump) (.075") 1991-Up (Red)	1	8677572
211	34602B	Washer, [4L80E] (Pump) (.091") 1991-Up (Brown)	1	8677573
211	34602C	Washer, [4L80E] (Pump) (.107") 1991-Up (Green)	1	8677574
211	34602D	Washer, [4L80E] (Pump) (.123") 1991-Up (Black)	1	8677575
217	65405	Bearing W/Race, [4L80E] (Overdrive Planet to Forward Drum) 1991-Up	1	8628202
226	34401	Washer, [TH400 / 4L80E] (Center Support to Front Planet) (Metal) 1964-Up	1	8624783
226	34401P	Washer, [TH400 / 4L80E] (Center Support to Front Planet) (Plastic) 1964-Up	1	8623211
232	34339	Washer, [TH400 / 4L80E] (Forward Drum to Forward Clutch Hub) 1964-Up	1	8624196
232	34301-078	Washer, [TH400 / 4L80E] (Forward Drum to Forward Hub) 1964-Up (Contains: (5) .015" Thicker Washers)	1	Sonnax
232	34301-094	Washer, [TH400 / 4L80E] (Forward Drum to Forward Hub) 1964-Up (Contains: (5) .030" Thicker Washers)	1	Sonnax
235	34301	Washer, [TH400 / 4L80E] (Forward Hub to Direct Drum) (Metal) 1964-Up	1	8624781
235	34301P	Washer, [TH400 / 4L80E] (Forward Hub to Direct Drum) (Plastic) 1964-Up	1	
238	34501A	Washer, [TH400 / 4L80E] (Front Planet to Rear Planet) (4-Tab) (Metal) 1964-Up	1	8626372
244	65407A	Washer, [TH400 / 4L80E] (Front Planet to Rear Planet) (4-Tab) (Plastic) 1964-Up	1	
242	K34500	Bearing W/Races, [TH400 / 4L80E] (Center Support to Sun Gear) (3-Piece) 1964-Up	1	8623920
249	K34500C	Bearing W/Races, [TH400 / 4L80E] (Sun Gear to Rear Ring Gear) (4-Notches on ID) 97-Up (*Retros 1964-Up)	1	24208848
249	K34500A	Bearing W/Races, [TH400 / 4L80E] (Sun Gear to Rear Ring Gear) (3-Piece) 1964-96	1	8623921
249	34512	Shim, [4L80E] (Rear) (Internal Gear Bearing) (Between # 252 & # 594) (.040") 1999-Up	1	24211821
252	34500-Z	Shim Kit, [TH400 / 4L80E] (Under # 252 to Reduce End Play) (10 Per Kit) 1964-Up	1	Sonnax
256	K34500B	Bearing W/Race, [TH400 / 4L80E] (Rear) (Ring Gear to Output Shaft) (3-Piece) 1964-Up	1	8623922
268	34501A	Washer, [TH400 / 4L80E] (Output Shaft to Case) (4-Tab) (Metal) 1964-Up (*Also Front Planet to Rear Planet)	1-2	8626372
269	34601	Washer, [TH400 / 4L80E] (Output Shaft to Case) (3-Tab) (.074"-.078") 1964-Up (#1)	1	8625401
269	34601A	Washer, [TH400 / 4L80E] (Output Shaft to Case) (3-Tab) (.082"-.086") 1964-Up (#2)	1	8625402
269	34601B	Washer, [TH400 / 4L80E] (Output Shaft to Case) (3-Tab) (.090"-.094") 1964-Up (#3)	1	8625403
269	34601C	Washer, [TH400 / 4L80E] (Output Shaft to Case) (3-Tab) (.098"-.102") 1964-Up (#4)	1	8625404
269	34601D	Washer, [TH400 / 4L80E] (Output Shaft to Case) (3-Tab) (.106"-.110") 1964-Up (#5)	1	8625405
269	34601E	Washer, [TH400 / 4L80E] (Output Shaft to Case) (3-Tab) (.114"-.118") 1964-Up (#6)	1	8625406
066	34908	Bearing, [TH400 / 4L80E] (Extension Housing) (Heavy Duty Applications) 1991-Up	1	8670754
		GASKETS & RUBBER COMPONENTS		
300	3893	Gasket, [TH400] (Pan) 1964-Up	1	8655625
300	3893G	Gasket, [4L80E] (Pan) (*Except Jaguar) 1991-Up	1	8677743
300	3893J	Gasket, [4L80E] (Pan) (Jaguar) 1991-Up	1	
300	3893E	Gasket, [4L80E] (Pan) (Bonded Gasket) (*Except Jaguar) 1991-Up	1	
300	13270	Gasket, [TH425] (Bottom Pan) 1966-78	1	8626932
301	13269	Gasket, [TH425] (Sprocket Cover) 1966-78	1	8625031
305	13271	Gasket, [TH400] (Extension Housing) 1964-Up	1	8624709
305	13303	Gasket, [TH425] (Final Drive to Case) 1966-78	1	389948
317	100143	Gasket, [TH400] (Extension Housing Adapter to 205 Transfer Case) 1969-86	1	
317	100127	Gasket, [TH400] (Extension Housing Adapter to 208 / 241 Transfer Case) (6-Bolt) 1987-Up	1	
317	100130	Gasket, [TH400] (Extension Housing Adapter to 231 Transfer Case) (5-Bolt) 1988-Up	1	
306	3914	Gasket, [TH400] (Governor Cover) 1964-Up	1	8623263
307	3916	Gasket, [TH400] (Rear) (Servo Cover) 1964-Up	1	8623174
307	3916E	Gasket, [4L80E] (Rear) (Servo Cover) 1991-Up	1	8675728
308	3993E	Gasket, [4L80E] (Accumulator Housing) 1991-Up	1	8681829
309	13268A	Gasket, [TH400] (Pump Bolt Washer) 1964-Up	6-8	8626281

TH400 (3L80)/4L80E/4L85E

310	3994	Gasket, [TH400] (Pump) 1964-Up	1	8623978
310	3994E	Gasket, [4L80E] (Pump Cover to Case) 1991-Up	1	8677782
310	13274	Gasket, [TH425] (Pump) 1966-78	1	
311	3877V	O-Ring, [TH400 / 4L80E] (Pump Body) 1964-Up	1	8654716
311	13273	O-Ring, [TH425] (Pump) 1966-78	1	8625007
312	13268A	Washer, [TH400] (Pump Bolt) 1985-Up	8	
312	13268E	O-Ring, [4L80E] (Pump Bolt) 1991-Up	7	8655281
320	3993	Gasket, [TH400] (Case to Spacer Plate) (6-Check Ball Type) (Yellow stripe) 1965-E87	1	8623563
320	3993A	Gasket, [TH400] (Case to Spacer Plate) (7-Check Ball Type) (No stripe) L1987-Up	1	8670458
320	34205	Gasket, [4L80E] (Case to Spacer Plate) 1991-96 (*Will Work for 1997-Up Units) (Gasket, Valve Body -Upper)	1	8684205
320	34205A	Gasket, [4L80E] (Case to Spacer Plate) 1997-Up (Gasket, Valve Body - Upper) (*Use 34205)	1	24204253
320	13275	Gasket, [TH425] (Case to Spacer Plate) 1966-78	1	8625203
321	3992	Gasket, [TH400] (Valve Body to Spacer Plate) (6-Check Ball Type) 1965-E87	1	8623174
321	3992A	Gasket, [TH400] (Valve Body to Spacer Plate) (7-Check Ball Type) L1987-Up (*Will Retro Fit to 1965 models)	1	8670447
321	13276	Gasket, [TH425] (Valve Body to Spacer)	1	
321	34733	Gasket, [4L80E] (Valve Body to Spacer Plate) (Lower) 1991-96 (*Will Work for 1997-Up Units)	1	2420115
321	34733B	Gasket, [4L80E] (Valve Body to Spacer Plate) (Lower) 1997-Up (*Use 34733)	1	24204268
328	3913	Gasket, [TH400] (Valve Body Detent Solenoid) 1964-Up	1	8623741
328	3913A	Gasket, [TH425] (Solenoid to Case) 1966-78	1	8625086
332	3963	Lip Seal, [TH400] (Intermediate Clutch) (Inner) 1964-Up	1	8627627
332	34504	Lip Seal, [4L80E] (Intermediate Clutch) (Inner) 1991-Up	1	8675636
333	3962	Lip Seal, [TH400] (Intermediate Clutch) (Outer) 1964-Up	1	8623143
333	34505	Lip Seal, [4L80E] (Intermediate Clutch) (Outer) 1991-Up	1	8675637
334	3284	Lip Seal, [TH400] (Forward & Direct Clutch) (Center) 1964-Up	2	8623121
335	34501	Lip Seal, [4L80E] (Forward Clutch) (Center) 1991-Up	1	8675526
335	34503	Lip Seal, [4L80E] (Direct Clutch) (Center) 1991-Up	1	8677584
334	13322	Lip Seal, [TH400 / 4L80E] (Forward Clutch) (Center) (Bevel Cut) 1964-Up	1	8627690
334	34818	Bonded Lip Seal & Sleeve, [4L80E] (Forward Clutch) (Inner) 1997-Up (Orifice is .050")	1	
334	34818A	Bonded Lip Seal & Sleeve, [4L80E] (Forward Clutch) (Inner) 1997-Up (*Retro to 1991) (Orifice Is .070")	1	
334	34818B	Bonded Lip Seal & Sleeve, [4L80E] (Forward Clutch) (Inner) 1997-Up (Orifice is .056")	1	
335	3643	Lip Seal, [TH400] (Forward & Direct Clutch) (Outer) 1964-Up	2	8623101
335	34502	Lip Seal, [4L80E] (Forward & Direct Clutch) (Outer) 1991-Up	2	8677583
336	3956	Lip Seal, [TH400] (Forward & Direct Clutch) (Inner) 1964-Up	2	8623102
336	34500	Lip Seal, [4L80E] (Forward & Direct Clutch) (Inner) 1991-Up	2	8677582
340	34561	Lip Seal, [4L80E] (4th Clutch) (Inner) 1991-Up	1	8661586
341	34566	Lip Seal, [4L80E] (4th Clutch) (Outer) 1991-Up	1	8681587
345	13304	O-Ring, [TH425] (Governor Cover) 1966-78	1	
346	3410	O-Ring, [TH400] (Modulator) 1964-Up	1	10054241
347	3410	O-Ring, [TH400] (Case Connector) 1965-Up	1	
347	34570	O-Ring, [4L80E] (Wire Harness Connector) 1991-Up	1	
348	34506	Lathe Cut Seal, [4L80E] (Extension Housing) 1991-Up	1	8681168
349	3302	O-Ring, [TH400] (Linkage Shaft) 1964-67	1	8621767
351	34710E	D-Ring, [4L80E / 4L85E] (3rd & 4th Clutch) (Accumulator Piston) (Large) (Viton) 1991-Up	2	8681647
352	34711E	D-Ring, [4L80E / 4L85E] (3rd Clutch) (Accumulator Piston) (Small) (Viton) 1991-Up	1	8681639
353	34567	O-Ring, [TH400 / 4L80E] (Rear) (Accumulator) (Inner) 1991-Up	1	8678294

354	34568	O-Ring, [TH400 / 4L80E] (Rear) (Accumulator) (Outer) 1991-Up	1	
363	3921	Lathe Cut Seal, [TH400 / 4L80E] (Rear) (Servo Piston) 1964-Up	1	8623430
368	3547	O-Ring, [TH400] (Filter Pick-Up Tube) 1964-Up	1	1363951
369	3126	O-Ring, [TH400] (Speed-O Housing) 1964-Up	1	1359319
370	12448	O-Ring, [4L80E] (Output Speed Sensor) 1991-Up	1	
371	3291	O-Ring, [TH400] (Filler Tube) 1964-78	1	6264902
371	3292	Boot, [TH400 / 4L80E] (Filler Tube) 1979-Up	1	1259475
374	3267	O-Ring, [TH400 / 4L80E] (Output Shaft to Yoke) 1964-Up	1	8616504
379	84548	Boot, [4L80E] (Filter Neck) 1991-Up	1	8656613
380	34569	O-Ring, [4L80E] (Input Shaft) 1991-Up	1	8661760
	3205	O-Ring, [TH400] (Parking Pawl Pin) 1964-Up	1	8623040
	K34900-2	External Seal Kit, [TH400] (With Pan Gasket) 1964-Up	1	
	K34900E-2	External Seal Kit, [4L80E] (With Pan Gasket) 1991-Up	1	
		TECHNICAL MANUALS		
	TM400	Tech Manual, [TH400] 1964-91	1	ATSG
	TM4L80-E	Tech Manual, [4L80E] 1991-Up	1	ATSG
		ELECTRICAL COMPONENTS		
410	77947	Switch, [4L80E] (MLPS / PRNDL) (4 & 7 Pin Connectors) (Black Plastic) 1995-03	1	24229422
410	77947A	Switch, [4L80E] (MLPS / PRNDL) (11 Pin Single Connectors) 2004-Up	1	24221125
414	34600	Switch, [TH400] (Spark Control) 1964-Up	1	8627332
418	34326E	Solenoid, [4L80E] (TCC, PWM) 1991-Up	1	24210864
420	34326	Solenoid, [TH400] (Valve Body Detent) (Short Wire) (Mounts on Valve Body) 1964-Up	1	8629935
420	34328A	Solenoid, [TH425] (Valve Body Detent) (Mounts on Pump) 1965-67	1	
420	MS-4L80E	Solenoid Master Kit, [4L80E] (1- TCC or PWM, 2- Shift, & 1- Pressure Regulator) 1991-Up	1	Teckpak
420	MS-4L80E-H	Solenoid Kit, [4L80E] (1- TCC or PWM, 2- Shift, & Pressure Regulator), (Internal Wire Harness) 1994-Up	1	Teckpak
421	34825	Solenoid, [4L80E] (1-2 Shift) (Purple) (“A”) 1991-Up	1	8678638
422	34826	Solenoid, [4L80E] (2-3 Shift) (Tan) (“B”) 1991-Up	1	8678639
429	34953	Throttle Position Sensor, [4L80E] (TPS) (Diesel) 1991-Up	1	10137417
431	48-MOD	Vacuum Pressure Control System, [4L80E] 1991-Up	1	Transgo
435	34605U	Solenoid, [4L80E] (Pressure Control) (Force Motor) 1991-03	1	Teckpak
435	34605A	Solenoid, [4L80E] (Pressure Control) (Force Motor) 1992-03 (Has 2-Flat Blades on End of Solenoid)	1	24220158
435	4L6-SOL-KT	Repair Kit, [4L80E] (Force Motor Solenoid) 1993-Up (With Tool Kit) (Fixes 4-Solenoids)	1	Transgo
435	4L6-SOL-4	Repair Kit Refills (For 4L6-SOL), [4L80E] (Force Motor Solenoid)	1	Transgo
435	34605D	Solenoid, [4L80E] (Pressure Control) (Force Motor) 2004-Up	1	24224905
436	34823	Speed Sensor, [4L80E] (Input & Output) 1991-Up	1-2	24203876
437	34824	Sensor, [4L80E] (Temperature) 1991-Up	1	8661818
442	34657	Switch, [4L80E] (Manifold Pressure Switch) 1991-Up	1	8681413
444	34327	Connector, [TH400] (Case) (1-Prong) 1964-65	1	2977975
444	34329	Connector, [TH400] (Case) (1-Prong) 1968-Up	1	24205373
444	34327A	Connector, [TH400] (Case) (2-Prong) (With Variable Pitch) 1964-67	1	2984091
444	34329A	Connector, [TH400] (Case) (2-Prong) (With Insulator) 1970-82	1	8629502
	34986	Repair Kit, [4L80E] (External Wire Harness) (11-Wire) (Plugs Into Connector) 1994-Up	1	350-0033
	K77971	Repair Kit, [4L80E] (MLPS) (External Wire Harness) (7 & 4 Pin Neutral Safety Connectors) (With Wires & Shrink Tubes) 1995-03	1	15305887
446	34985	Wire Harness, [4L80E] (Internal) (11-Prong) (With Case Connector) **(*Also Must Use 34986)** 1991-03	1	24222798
446	34998	Wire Harness, [4L80E] (Internal / External) (With Connectors) (*Retros 1991-03)	1	24200161

TH400 (3L80)/4L80E/4L85E

446	34985A	Wire Harness, [4L80E] (Internal) (With Temperature Sensor) 2004-Up	1	24224906
446	34985AR	Wire Harness, [4L80E] (Internal) (With Temperature Sensor) 2004-Up	1	Rostra
446	34985J	Wire Harness, [4L80E] (Internal) (Jaguar) 1991-Up	1	
447	34790	Interceptor, [4L80E] (Electronic Modulator) 1991-93	1	INT34A
447	34790A	Interceptor, [4L80E] (Electronic Modulator) 1994-Up	1	INT34B
		MISC. COMPONENTS		
476	34930	Silencer Ring for Output Carrier, [TH400 / 4L80E] (Black Plastic) 1964-Up	1	8626112
483	65168	Cup Plug, [TH400 / 4L80E] (Parking Pawl Pin) 1964-Up	1	8620318
	34165	Lube Orifice Seal, [4L80E] (Extension Housing) (Rear Lube) 1991-Up	1	9427692
487	30130	E-Clip, (GM) (3/16") 1964-Up	2	9431762
489	K35803U	Dust Cover, (GM) (Universal) 1964-Up	1	Teckpak
490	35910A	Vent Tube, [TH400 / 4L80E] (Case) 1964-Up	1	8633408
494	K35999U	Filler Tube & Dip Stick, (GM) 1964-Up	1	Teckpak
495	34893	Filler Pipe Intake, [TH400] (Deep Pan) (Plastic) L1967-Up	1	8629526
495	34893A	Filler Pipe Intake, [TH400] (Shallow Pan) (Plastic) L1967-Up	1	8626886
494	K35999R	Filler Tube Repair, 1964-98	1	
		HARD PARTS		
500	34910BA	Pump, [TH400] (6-Bolt) (Body Cast # 895) (Stator Cast # 896) 1971-Up	1	
500	34910A	Pump, [TH400] (8-Bolt) (Body Cast # 895) (Stator Cast # 896) 1964-Up	1	
500	34911	Pump, [TH400] (Variable Pitch) 1964-67	1	
500	34910	Pump, [TH400] (8-Bolt) (Body Cast # 121) (Stator Cast # 896) 1964-Up	1	
500	34200E	Pump, [4L80E] (Body Cast # 778, 779, or 702) (Stator Cast # 779, 263, or 184) 1991-96	1	
500	34200F	Pump, [4L80E] (Body Cast # 302, or 779) (Stator Cast # 512, or 379) 1997-03	1	124200314
500	34200G	Pump, [4L80E] (Body Cast # 302 or 779) (Stator Cast # 512 or 379) 2004-Up	1	
		PUMP COMPONENTS		
507	34994-14K	End Plug Set, [4L80E] (TCC Bore) (5 Per Set) 1991-Up	1	Sonnax
	34204	Retainer, [4L80E] (Metal) (Oil Deflector) (1-Pump Body Bolt Holds This on) 1997-Up	1	24200357
507	34994-12	Retaining Pin Set, [4L80E] (Overdrive / Reverse Check Ball) (10 Per Set)	1	Sonnax
507	34892	Spring, [TH400] (Pressure Regulator Valve) 1964-Up	1	8623090
507	34200-05K	Balance Plug Set, [4L80E] (Pressure Regulator End Plug) (Without Rings) (5 Per Set)	1	Sonnax
507	8682998	Pressure Regulator Assembly, [4L80E] 1991-Up	1	8682998
507	34209	Sleeve, [4L80E] (Reverse Boost Valve) (.855"ID) (*Valve not included) 1991-96	1	8676456
507	34200-09K	Sleeve, [4L80E] (Reverse Boost Valve) (.830"ID) 1997-Up	1	Sonnax
507	34200-03K	Boost Valve & Sleeve, [4L80E] (Reverse) 1991-Up (OEM Type)	1	Sonnax
507	34200-01K	Reverse Boost Valve & Sleeve, [4L80E] (With (2) O-Rings For Sleeve) 1989-Up	1	Sonnax
507	34200-10K	Reverse Boost Valve & Sleeve, [4L80E] (Without O-Rings) (Self Regulating Boost Valve Kit With Relief Valve)	1	Sonnax
507	34910-S-25	Ring Set, [TH400] (Pressure Regulator Valve) (Teflon) (25 Per Pack) (*Fits 34910-03K)	1	Sonnax
507	34910-03K	Pressure Regulator Assembly, [TH400] 1964-Up	1	Sonnax
507	34910-01K	Boost Valve & Sleeve, [TH400] (Reverse) 1964-Up	1	Sonnax
		HARD PARTS (Continued)		
510	34910BE	Pump Body, [TH400] (6-Bolt) (Cast # 895) 1971-Up	1	8679988
510	34910BD	Pump Body, [TH400] (8-Bolt) (Cast # 895) 1964-Up	1	
510	34910B	Pump Body, [TH400] (Variable Pitch) 1964-67	1	
510	34910BC	Pump Body, [TH400] (8-Bolt) (Cast # 121) 1964-Up	1	
510	34919	Pump Body, [TH425] 1966-78	1	8625330

510	34202	Pump Body, [4L80E] (Cast # 702, 778, or 779) 1991-96	1	24211287
510	34202A	Pump Body, [4L80E] (Cast # 302, or 779) 1997-Up	1	
520	34910C	Stator, [TH400] (Cast # 896) 1964-Up	1	
520	34911C	Stator, [TH400] (Variable Pitch) 1964-67	1	
520	34203	Stator, [4L80E] (Cast # 779, 263, or 184) 1991-96	1	8681180
520	34203A	Stator, [4L80E] (Cast # 512 or 379) 1997-Up	1	24204303
520	34203B	Stator, [4L80E] (Cast # 512 or 379) 2004-Up	1	
530	K34201E	Pump Gear Set, [4L80E] 1991-Up	1	
530	K35201B	Pump Gear Set, [TH400] (.727" Thick) 1964-Up	1	
530	K34201EX	Pump Gear Set, [4L80E] (Oversize)	1	
545	34876	Housing, [4L80E] (4th Clutch) (Cast # 8661266) (For 8-Lug Pressure Plate) 1991-98	1	24200789
545	34876A	Housing, [4L80E] (4th Clutch) (Cast # 24205817) (For 2-Lug Pressure Plate) 1999-Up	1	24215124
551	34898	Drum, [4L80E] (Overrun Clutch) (With Sun Gear) (*Uses 12-Roller Sprag With .309"OD Rollers) 1991-01	1	8680918
551	34898A	Drum, [4L80E] (Overrun Clutch) (With Sun Gear) (*Uses 12-Roller Sprag With .196"OD Rollers) 2002-Up	1	
554	34803B	Drum, [TH400] (Forward Clutch) 1964-Up	1	8624908
554	34815	Drum, [4L80E] (Forward Clutch) (With Ring Gear) (Lip Seal Piston Type) 1991-96	1	8680917
554	34815A	Drum, [4L80E] (Forward Clutch) (With Ring Gear) (Molded Piston Type) 1997-Up	1	24208850
555	34837	Drum, [TH400] (Direct Clutch) (With Lug Type Sprag) (5-Clutch)	1	
555	34837A	Drum, [TH400] (Direct Clutch) (With Roller Type Sprag) (5-Clutch) (With Check Ball)	1	
555	34837B	Drum, [TH400] (Direct Clutch) (With Roller Type Sprag) (5-Clutch) (No Check Ball)	1	
555	34838	Drum, [TH400] (Direct Clutch) (With Lug Type Sprag) (6-Clutch) (With Check Ball)	1	
555	34838A	Drum, [TH400] (Direct Clutch) (With Lug Type Sprag) (6-Clutch) (No Check Ball)	1	
555	34836	Drum, [TH400] (Direct Clutch) (With Roller Type Sprag) (6-Clutch) (With Check Ball) 65-Up	1	
555	34836A	Drum, [TH400] (Direct Clutch) (With Roller Type Sprag) (6-Clutch) (No Check Ball)	1	
555	34838E	Drum, [4L80E] (Direct Clutch) (Without Sprag) 1991-96	1	24209311
555	34838F	Drum, [4L80E] (Direct Clutch) (With Sprag) 1997-Up	1	
560	K34967	Piston Kit, [4L80E] (Overrun Clutch) (.079" Snap Ring) 1991-01	1	
560	K34967A	Piston Kit, [4L80E] (Overrun Clutch) (.060" Snap Ring) 2001-Up	1	
561	K34807	Piston Kit, [4L80E] (4th Clutch) 1991-Up	1	
562	K34841	Piston Kit, [TH400] (Intermediate Clutch) (Aluminum)	1	8670196
562	K34841A	Piston Kit, [TH400] (Intermediate Clutch) (Steel)	1	
562	K34810	Piston Kit, [4L80E] (Intermediate Clutch) (Piston Cast # 8661657)	1	
562	K34810A	Piston Kit, [4L80E] (Intermediate Clutch) (Piston Cast # 24202553)	1	
564	K34819	Piston Kit, [TH400] (Forward Clutch) 1964-Up	1	
564	K34808	Piston Kit, [4L80E] (Forward Clutch) (Aluminum Piston Cast # 8675507)	1	
564	K34808A	Piston Kit, [4L80E] (Forward Clutch) (Steel Piston With Molded Rubber) 1997-Up	1	
565	K34832	Piston Kit, [TH400] (Direct Clutch) (5-Clutch) (Aluminum) (With Check Ball)	1	
565	K34832A	Piston Kit, [TH400] (Direct Clutch) (5-Clutch) (Steel)	1	
565	K34832AA	Piston Kit, [TH400] (Direct Clutch) (5-Clutch) (Aluminum) (No Check Ball)	1	
565	K34832AB	Piston Kit, [TH400] (Direct Clutch) (6-Clutch) (Aluminum) (With Check Ball)	1	
565	K34832B	Piston Kit, [TH400] (Direct Clutch) (6-Clutch) (Steel)	1	
565	K34832C	Piston Kit, [TH400 / 4L80E] (Direct Clutch) (6-Clutch) (Aluminum) (No Check Ball)	1	

TH400 (3L80)/4L80E/4L85E

565	K34809	Piston Kit, [TH400 / 4L80E] (Direct Clutch) (5-Clutch) (Aluminum) (No Check Ball) (Piston Cast # 8675510)	1	
565	K34809A	Piston Kit, [4L80E] (Direct Clutch) (5-Clutch) (Molded Rubber)	1	
574	34322	Clutch Hub, [TH400] (Forward Clutch) 1968-98	1	8661611
574	34222E	Clutch Hub, [4L80E] (Forward Clutch) 1991-Up	1	8661611
574	34222EA	Clutch Hub, [4L80E] (Forward Clutch) (With 4-Wide Splines) 1997-Up	1	
575	34323	Clutch Hub, [TH400 / 4L80E] (Direct Clutch) (1.230" Thick Splines) 1964-98	1	
575	34323E	Clutch Hub, [4L80E] (Direct Clutch) (1.130" Thick Splines) 1991-Up	1	8661837
575	34323F	Clutch Hub, [4L80E] (Direct Clutch) (1.160" Thick Splines) 1991-Up	1	
580	34821	Planet, [4L80E] (Overdrive) (*Uses a Sprag With .309"OD Rollers) 1991-01	1	24200130
580	K34821	Planet Kit, [4L80E] (Overdrive) (*Uses Sprag With .309"OD Rollers) 1991-01 (Contains: # 551,580,560,650)	1	8680918
580	34821A	Planet, [4L80E] (Overdrive) (*Uses a Sprag With .196"OD Rollers) 2002-Up	1	
580	K34821A	Planet Kit, [4L80E] (Overdrive) (With Sprag .196"OD Rollers) 2002-Up (*Retro to 1991-Up) (Contains: # 551,580,650)	1	
582	34875	Planet, [TH400] (Front) (Angled Teeth) (Lug Type Sprag) 1964-66	1	8624971
582	34875A	Planet, [TH400 / 4L80E] (Front) (4 Gear Angled Teeth) (*Uses Roller Type Sprag With No Legs and a Spacer or Fits Sprag With 8-Legs) 1966-98	1	8675627
582	34875E	Planet, [4L80E] (Front) (4 Gear Angled Teeth) (*Uses Roller Type Sprag With No Legs or Spacer has a Bevel Under Sprag) 1991-Up	1	24212051
582	34875G	Planet, [4L80E] (Front) (5 Gear Angled Teeth) (*Uses Roller Type Sprag With 8-Legs) 96-Up	1	
582	34879	Planet, [TH425] (Front) (Roller Type Sprag) 1966-78	1	
582	34875B	Planet, [TH400 / 4L80E] (Front) (Straight Teeth) 1991-Up	1	24205552
583	K34875E	Planet Kit, [TH400 / 4L80E] (Straight Teeth) (Contains: # 582, 584, 612, & 594)	1	
584	34880	Planet, [TH400] (Rear) (Angled Teeth) (Short Parking Lugs) 1964-98	1	8655132
584	34880AB	Planet, [TH400] (Rear) (Angled Teeth) (Long Parking Lugs)	1	
584	34880E	Planet, [4L80E] (Rear) (4 Gear Angled Teeth) (.710" Tall Pinion Gears) 1991-Up (*Can Use 34880EA)	1	8675611
584	34880EA	Planet, [4L80E] (Rear) (4 Gear Angled Teeth) (.795" Tall Pinion Gears) 1999-Up (*Can Use 34880E)	1	
584	34880G	Planet, [4L80E] (Rear) (5 Gear Angled Teeth) 2002-Up (.795" Tall Pinion Gears)	1	
584	34880F	Planet, [TH400] (Rear) (Straight Teeth) (Short Parking Lugs)	1	8655133
584	34880FA	Planet, [TH400] (Rear) (Straight Teeth) (Long Parking Lugs)	1	
584	34880F	Planet, [4L80E] (Rear) (Straight Teeth) 1991-Up	1	8675612
594	34853E	Ring Gear, [TH400 / 4L80E] (Rear) (Planet) (Angled Teeth) 1964-96	1	8661892
594	34583G	Ring Gear, [4L80E] (Rear) (Planet) (Angled Teeth) (With 4-Deep Inner Splines) 1997-Up	1	
594	34853F	Ring Gear, [TH400 / 4L80E] (Rear) (Planet) (Straight Teeth) 1991-96	1	8675532
594	34583FA	Ring Gear, [4L80E] (Rear) (Planet) (Straight Teeth) (With 4-Deep Inner Splines) 1997-Up	1	
612	34872AA	Sun Gear, [TH400] (Angled Teeth) (26-Narrow & 2-Wide Splines) 1964-65	1	
612	34872	Sun Gear, [TH400 / 4L80E] (Angled Teeth) (28-Inner Splines) 1966-96	1	8626807
612	34872B	Sun Gear, [4L80E] (Angled Teeth) (28-Inner Splines) 1997-Up	1	
612	34873	Sun Gear, [TH425] 1966-78	1	
612	34872A	Sun Gear, [TH400 / 4L80E] (Straight Teeth) Up to 1997	1	24203396
612	34872C	Sun Gear, [TH400 / 4L80E] (Straight Teeth) 1997-Up	1	
630	34846	Center Support, [TH400] (Lug Type Sprag) 1966-98	1	8625990
630	34845	Center Support, [TH400] (Roller Type Sprag) 1964-65	1	8680914
630	34822	Center Support, [4L80E] (*Uses a 1-3/8" Long #783 Bolt) 1991-96	1	8680914

630	34822A	Center Support, [4L80E] (With Lube Hole Passage) (*Uses No Shim) (4.220" Tall, From The Left Edge of Ring Tower Thru Center to Where #243 Sits) (Central Lube Type) 1997-98	1	24208849
630	34822B	Center Support, [4L80E] (With Lube Hole Passage) (*Uses A Shim) (4.180" Tall, From The Front Edge of Ring Tower Thru Center to Where #243 Sits) (With Bearing Recess) 1999-Up	1	24217454
	K34822	Center Support Kit, [4L80E] (With # 630, 674, & 249) 1997-Up (*Will Retro For 34822A 1997-99 and 34822B 1999-Up)	1	
		SPRAGS & ONE WAY CLUTCHES		
650	34417	Sprag, [4L80E] (Overdrive) (.309"OD Rollers) 1991-01	1	7471001
650	34417A	Sprag, [4L80E] (Overdrive) (.196"OD Rollers) 2002-Up	1	12431003
652	34419	Sprag, [TH400] (Intermediate) (Roller Type) 1972-98	1	8625814
652	34418X	Sprag, [TH400 / 4L80E] (Intermediate) (Lug Type) (Heavy Duty) (34-Elements) 1964-Up	1	8663173
652	34418	Sprag, [TH400 / 4L80E] (Intermediate) (Lug Type) (16-Elements) 1964-Up	1	8623116
654	6239G	Sprag, [TH400] (Low Clutch Roller) (Rear) 1966-98	1	8623842
654	6239G	Sprag, [4L80E] (Low Clutch Roller) (Rear) (No Legs) 1991-E95	1	7471002
654	34727	Sprag, [4L80E] (Low Clutch Roller) (Rear) (With 8-Legs) L1995-Up	1	7471009
		HARD PARTS (Continued)		
663	34839	Outer Race, [TH400] (Intermediate Sprag) (.751" Thick) 1964-98	1	8629487
663	34812	Outer Race, [4L80E] (Intermediate Sprag) (.795" Thick) 1991-Up	1	8680915
670	34800	Input Shaft (Turbine), [TH400] 1964-Up	1	8624772
670	34801	Input Shaft (Turbine), [TH400] (*Variable Pitch Only) 1965-67	1	
670	34801E	Input Shaft (Turbine), [4L80E] (Partial Oil Hole)	1	24200128
670	34801F	Input Shaft (Turbine), [4L80E] (Through Oil Hole)	1	
672	34851	Main Shaft, [TH400] (10-1/4" Long) 1964-Up	1	
672	34851E	Main Shaft, [4L80E] (10-3/16" Long) (With Lube Hole) 1991-96	1	8661613
672	34851F	Main Shaft, [4L80E] (10-3/16"Long) (No Lube Hole) 1997-98 (1.093" From Shaft End to Forward Hub Stop)	1	
672	34851G	Main Shaft, [4L80E] (10-3/16"Long) (No Lube Hole) 1999-Up (1.083" From Shaft End to Forward Hub Stop)	1	
674	34870A	Shaft, [TH400] (Intermediate Sun Gear) (26-Splines on Sun Gear) 1964-65	1	
674	34870	Shaft, [TH400 / 4L80E] (Intermediate Sun Gear) (32-Splines on Sun Gear) 1966-96	1	8661708
674	34813	Shaft, [4L80E] (Intermediate Sun Gear) (Sun Gear Side 2-1/4") 1991-96	1	
674	34813A	Shaft, [4L80E] (Intermediate Sun Gear) (Sun Gear Side 1-1/4") 1997-98	1	
674	34813B	Shaft, [4L80E] (Intermediate Sun Gear) (Sun Gear Side 1-1/2") 1999-Up	1	
678	34862	Output Shaft, [TH400] (Cadillac, Long) 1964-Up	1	
678	34863A	Output Shaft, [375] (15" Long) (*Uses a Speed-O Gear) 1964-Up	1	
678	34863B	Output Shaft, [375] (15" Long) (*Uses a Electric Pick-Up)	1	
678	34863	Output Shaft, [TH400] (15" Long) 1964-Up	1	
678	34966C	Output Shaft, [TH400] (11-3/4" Long) (With 350-Splines)	1	
678	34860	Output Shaft, [TH400] (2WD & Some 4x4) (9" Long) (With Rubber O-Ring Groove) 1965-98	1	
678	34865	Output Shaft, [TH400] (2WD) (9" Long) (Without Rubber O-Ring Groove) 1965-98	1	8627453
678	34934	Output Shaft, [TH400] (Truck) (9" Long) (Bolt-On Type Yoke) (*Uses Plastic Speed-O Gear) 1980-Up	1	8627456
678	34934A	Output Shaft, [TH400] (Truck) (9" Long) (Bolt-On Type Yoke) (*Uses Steel Speed-O Gear)	1	
678	34934B	Output Shaft, [TH400] (Truck) (9" Long) (Bolt-On Type Yoke) (With Electronic Pick-up)	1	
678	34866	Output Shaft, [TH400] (4x4) (Jeep) (Coarse Splines) 1973-98	1	8624900
678	34935A	Output Shaft, [TH400] (4x4) (7" Long) 1977-82	1	
678	34935	Output Shaft, [TH400] (4x4) (6.50" Long) 1980-Up	1	8629461
678	34966A	Output Shaft, [TH400] (4x4) (6.50" Long) (With 350-Splines)	1	8679991

TH400 (3L80)/4L80E/4L85E

678	34966B	Output Shaft, [TH400] (4x4) (6-7/8" Long) (With 700R4 Splines)	1	
678	34967A	Output Shaft, [4L80E] (9" Long) (Bolt-On Yoke) (With Lube Hole) 1991-96	1	
678	34967AA	Output Shaft, [4L80E] (9" Long) (Bolt-On Yoke) (No Lube Hole) 1997-Up (*Uses a Brake Drum)	1	
678	34967D	Output Shaft, [4L80E] (4x4) (3-3/4" Long) (With Lube Hole) 1991-96	1	
678	34967DA	Output Shaft, [4L80E] (4x4) (3-3/4" Long) (With Lube Hole) 1997-Up	1	
678	34867B	Output Shaft, [4L80E] (4x4) (5" Long) (With Lube Hole) 1991-96	1	
678	34867BA	Output Shaft, [4L80E] (4x4) (5" Long) (No Lube Hole) 1999-up	1	
678	34967E	Output Shaft, [4L80E] (8-1/8" Long) (With O-Ring) (Slip-On Yoke) (With Lube Hole) 1991-96	1	
678	34967EA	Output Shaft, [4L80E] (8-1/8" Long) (With O-Ring) (Bolt-On Yoke) (With Lube Hole) 1991-96	1	
678	34967EB	Output Shaft, [4L80E] (8-1/8" Long) (With O-Ring) (Slip-On Yoke) (No Lube Hole) 1997-Up	1	
678	34967EC	Output Shaft, [4L80E] (8-1/8" Long) (With O-Ring) (Bolt-On Yoke) (No Lube Hole) 1997-Up	1	
678	34967F	Output Shaft, [4L80E] (8" Long) (No O-Ring Groove) (With Lube Hole) 1991-96	1	
678	34967FA	Output Shaft, [4L80E] (8" Long) (No O-Ring Groove) (No Lube Hole) 1997-Up	1	
678	34867C	Output Shaft, [4L80E] (7-7/8" Long) (With O-Ring) (Bolt-On Yoke) (With Lube Hole) 1991-96	1	
678	34967CA	Output Shaft, [4L80E] (7-7/8" Long) (With O-Ring) (Bolt-On Yoke) (No Lube Hole) 1997-Up	1	
678	34867	Output Shaft, [4L80E] (Jaguar) (7-3/8" Long) (With O-Ring Groove) (With Lube Hole) 91-96	1	
680	34410	Governor, [TH400] (2nd Design) 1964-Up	1	8623852
680	34410B	Governor, [TH425] 1966-78	1	8626853
684	K34411	Governor Gear & Pin Kit, [TH400] 1964-Up	1	8623924
684	K34411A	Governor Gear & Pin Kit, [TH425] (Left Angle) (With 1-Pin & 2-Nails) 1964-98	1	8624939
694	34143	Retainer, [TH400 / 4L80E] (Intermediate Sprag) 1964-Up	1	8626334
700	34419C	Chain, [TH425] (Drive) 1966-78	1	8625946
		Valve Bodies (REBUILT)		
740	GM-4614	Valve Body, [TH400] (Without Reverse Check Ball) 1987-Up	1	
740	GM-4615	Valve Body, [TH400] (With Reverse Check Ball) 1987-Up	1	
740	GM-4622	Valve Body, [4L80E] (With Temp Sensor) 1991-92	1	
740	GM-4623	Valve Body, [4L80E] (Without Temp Sensor) 1993-96	1	
740	GM-4624	Valve Body, [4L80E] (With Cast # 24204267) 1997-03	1	
740	GM-4624B	Valve Body, [4L80E] (Updated EPC) 2003-Up	1	
		VALVE BODIES		
740	34994	Valve Body, [TH400] (Used With 6-Check Ball Case) 1967-Up	1	
740	34994A	Valve Body, [TH400] (Used With 7-Check Ball Case) 1987-Up	1	
740	34994E	Valve Body, [4L80E] (4-Solenoids) (Cast # 8676811) (Without Plate or Accumulator Assembly) (No Temp Switch)	1	
740	34994F	Valve Body, [4L80E] (4-Solenoids) (Cast # 8676811) (Without Plate or Accumulator Assembly) (With Temp Switch)	1	
740	34994H	Valve Body, [4L80E] (4-Solenoids) (Cast # 8683479) (Without Plate or Accumulator Assembly)	1	
740	34994J	Valve Body, [4L80E] (4-Solenoids) (Cast # 8684212) (Without Plate or Accumulator Assembly) 1995-96	1	
740	34994G	Valve Body, [4L80E] (4-Solenoids) (Cast # 24204267) (Without Plate or Accumulator Assembly) 1997-2002	1	
740	34994K	Valve Body, [4L80E] 2003-Up	1	
		VALVE BODY COMPONENTS		
741	34994-07	Roll Pin Set, [4L80E] (Holds Valve Assembly In Valve Body) (10 Per Set)	1	Sonnax

741	34992A	Manual Valve, [TH400] (In Valve Body)	1	
741	34994-01K	Valve Kit, [4L80E] (TCC Regulator)	1	Sonnax
741	SC-4L80E	Sure Cure Kit, [4L80E] **(*Requires Tool # T-77754-TL)** 1991-Up	1	Sonnax
741	34994-15	Snap Ring, [4L80E] (Holds .684"OD End Plug In Valve Body) (10 Per Set) (TCC Valve)	1	Sonnax
741	34994-13	End Plug Set, [4L80E] (Valve Body End Plug .495"OD With O-Rings) (5 Per Set)	1	Sonnax
741	34994-14K	End Plug Set, [4L80E] (Valve Body End Plug .684"OD With O-Rings) (5 Per Set)	1	Sonnax
741	34200-01K	Valve & Sleeve, [4L80E] (Reverse Boost) ("O-Ring" Style)	1	Sonnax
741	34200-03K	Valve & Sleeve, [4L80E] (Reverse Boost) ("Factory" Style)	1	Sonnax
741	34200-16K	Limit Valve Kit, [4L80E] (Actuator Feed) **(*Requires 77754TL Tool)**	1	Sonnax
	77754TL	Reamer, [4L80E] (*34200-16K)	1	Sonnax
741	34994-16	Manual Valve, [4L80E] (In Valve Body)	1	Sonnax
741	34994-16K	Manual Valve Kit (Valve With End Plug & (2) O-rings)	1	Sonnax
741	34994-17K	Manual Valve Kit, [4L80E] (Without Valve) (End Plug & (2) O-Rings)	1	Sonnax
741	34200-14K	Valve, [4L80E] (Line to Lube Pressure Regulator)	1	Sonnax
741	34994-02K	Spring Kit, [4L80E] (1-2 Shift Valve)	1	Sonnax
	48-ACT-TL	Boring Kit, [4L80E] (Actuator Limit Valve) (Oversize) (Includes: Boring Kit, 6-Valves & Springs)	1	Transgo
	48-ACT-VL6	Refill, (*For 48-ACT-TL) (6-Valves & 6-Springs)	1	Transgo
		HARD PARTS (Continued)		
	VB101-5	Valve Body Plate Ball Seat Repair Kit	1	Teckpak
747	34999	Plate, [TH400] (Valve Body)	1	8661468
747	34999A	Plate, [TH400] (Valve Body) (With Code VUV)	1	8670858
747	34999B	Plate, [TH400] (Valve Body) (With 350 Engine) 1989-Up	1	8655791
747	34999C	Plate, [TH400] (Valve Body) (With Codes FD / FF / FP / FR / FS / FX)	1	8629796
747	34999D	Plate, [TH400] (Valve Body) (With 6.2L Diesel)	1	8655887
747	34999E	Plate, [4L80E] (Valve Body) (With Cast # BA / BB / BJ / BM / BN) (With Stamped Code 0654)	1	8680654
747	34999EA	Plate, [4L80E] (Valve Body) (With Stamped Code 8016)	1	8678016
747	34999EB	Plate, [4L80E] (Valve Body) (With Stamped Code 5688)	1	8685688
747	34999EC	Plate, [4L80E] (Valve Body) (With Stamped Code 5689)	1	8685689
747	34999ED	Plate, [4L80E] (Valve Body) (With Cast # 4225) (With Stamped Code 5690)	1	8685690
747	34999EF	Plate, [4L80E] (Valve Body) (With Stamped Code 5691)	1	8685691
755	34909	Case Cover, [TH425] (Channel Plate) 1966-78	1	8625009
760	34914	Case, [TH400] (Chevy) (With 6-Check Balls) 1965-86	1	
760	34914A	Case, [TH400] (Chevy) (With 7-Check Balls) 1987-Up	1	
760	34917	Case, [TH400] (Buick) (With Round Bell) 1964-76	1	
760	34912	Case, [TH400] (Buick / Olds / Pontiac / Cadillac) 1964-Up	1	
760	34912A	Case, [TH400] (Cadillac) (Flat Top) (With Variable Pitch) 1965-67	1	
760	34917B	Case, [TH400] (Chevy) (4X4) (*Uses a 6-Bolt Dust Cover) (With 6-Check Balls) 1977-86	1	
760	34917BA	Case, [TH400] (Chevy) (4X4) (*Uses a 6-Bolt Dust Cover) (With 7-Check Balls) 1987-Up	1	
760	34913E	Case, [4L80E] (GM) (Gas) Up to 7/1991	1	
760	34913EA	Case, [4L80E] (GM) (Gas) 8/1991-94	1	
760	34913F	Case, [4L80E] (GM) (Gas) (With 2-Neutral Safety Switch Bosses) (Without Cable Bosses) 1995	1	
760	34913G	Case, [4L80E] (GM) (Gas) (With 2-Neutral Safety Switch Bosses) (With Cable Bosses) 1996	1	
760	34913H	Case, [4L80E] (GM) (6-Bolts to Motor) 1997-98	1	
760	34913I	Case, [4L80E] (GM) (7-Bolts to Motor) 1999-03	1	
760	34913J	Case, [4L80E] (GM) (7-Bolts to Motor) 2004-Up (*Front Cooler Line Boss Is Only One Raised)	1	

TH400 (3L80)/4L80E/4L85E

760	34913K	Case, [4L80E] (Jaguar) (Round Bell) 1993-96	1	
760	34917A	Case, [TH400] (Jeep) (4X4) (Starter on Passenger Side) 1973-85	1	
760	34917C	Case, [TH400] (Jeep) (4X4) (Starter on Driver Side) 1986-Up	1	
760	34917D	Case, [TH425] (FWD) 1966-78	1	
		CASE COMPONENTS		
761	K34354	Inserts, [TH400 / 4L80E] (Case Saver Inserts) (5 Per Pack)	1	
		HARD PARTS (Continued)		
765	34980	Pan, [TH400] (With 3-Dimples) 1964-67	1	
765	34981	Pan, [TH400] (With 2-Dimples) 1968-Up	1	
765	34982	Pan, [TH400] (Deep) 1964-Up	1	8679994
765	K34982	Pan Kit, [TH400] (Deep Pan) (Filter Tube, Bolt, & Bolt Spacer)	1	
765	34701F	Pan, [4L80E] (2WD) (With Drain Plug on The Side) (Deep) 1997-Up	1	
765	34701E	Pan, [4L80E] (Without Drain Plug on The Side) 1991-96	1	
765	34701EA	Pan, [4L80E] (With Drain Plug on Bottom) 1997-Up (Pan Is Shallow on One End)	1	
765	34701EB	Pan, [4L80E] (Without Drain Plug on Bottom) 1997-Up (Pan Is Shallow on One End)	1	
765	K34701EB	Pan Kit, [4L80E] (With Bottom Drain Plug) (With Pan Gasket) 1997-Up (Pan Is Shallow on One End)	1	24204278
765	34701EC	Pan, [4L80E] (Jaguar) 1993-96	1	
770	34915B	Extension Housing, [TH400] (Cadillac) (Long) 1973-78	1	
770	34915C	Extension Housing, [TH400] (9-5/8") (*Uses Large Rear Seal) 1973-78	1	
770	34915D	Extension Housing, [TH400] (9-5/8") (*Uses Small Rear Seal) 1973-78	1	
770	34915A	Extension Housing, [375] (9-5/8") (*Uses 350 Rear Seal)	1	
770	34915AA	Extension Housing, [375] (9-5/8") (*Uses 350 Rear Seal) (7-3/16" From Rear Seal to Mount)	1	
770	34915	Extension Housing, [TH400] (Truck) (4" Long) (*Uses a Bolt-on Yoke) (*Uses Large Rear Seal)	1	
770	34915AB	Extension Housing, [TH400] (Truck) (4" Long) (*Uses Medium Rear Seal)	1	
770	34915H	Extension Housing, [4L80E] (Truck) (7-1/4" Long) (For Bolt-on Yoke)	1	
770	34915K	Extension Housing, [4L80E] (6-5/8" Long)	1	
770	34915L	Extension Housing, [4L80E] (5-3/4" Long)	1	
770	34915G	Extension Housing, [4L80E] (Truck) (7-1/4" Long) (For Bolt-on Yoke & Bolt-on Parking Brake)	1	
770	34915GA	Extension Housing, [4L80E] (Truck) (5-3/8" Long) (For Bolt-on Yoke & Bolt on Parking Brake)	1	
770	34915J	Extension Housing, [4L80E] (5-1/2") (Cast # 8676531) (1-Large & 4-Small Mounting Bolts on Bottom)	1	
770	34915M	Extension Housing, [4L80E] (4x4) (2-5/8" Long) (Cast Iron)	1	
770	34915MA	Extension Housing, [4L80E] (4x4) (2-5/8" Long) (Aluminum) (Cast # 15724251)	1	
770	34915MB	Extension Housing, [4L80E] (4x4) (2-5/8" Long) (Aluminum) (Cast # 15724745)	1	
770	34915E	Extension Housing, [TH400] (Jeep) (4X4) (5-1/8" Long) 1973-78	1	
770	34915F	Extension Housing, [TH400] (Chevy) (4X4) (*Used With 208 Transfer Case) 1973-78	1	
774	34922	Speed-O Housing, [TH400] (Uses 35-39 Teeth Speed-O Gear) (Black) 1969-86	1	1362294
774	34922A	Speed-O Housing, [TH400] (Uses 40-45 Teeth Speed-O Gear) (Purple) 1969-86	1	1362293
774	34960	Speed Sensor, [TH400] (2-Prong Connector)	1	
775	B63	Bolt, [TH400] (Converter Coarse Thread) (With Flange)	3-6	
775	B78	Bolt, [TH400 / 4L80E] (Converter) (Metric) (15mm Hex Head)	3-6	
775	11589040	Bolt, [4L80E] (Converter) (Metric) (Allen / Hex Head)	3-6	11589040

783	34846B	Bolt, [TH400] (Center Support to Case) (1-15/16" Long) 1964-Up	1	8670757
783	34802	Bolt, [4L80E] (Center Support to Case) (1-3/8" Long) 1991-Up	1	8661762
784	34803	Bolt, [4L80E] (4th Clutch Housing to Case) 1991-Up	1	8686124
789	34923	Spacer, [TH400] (Filter to Valve Body) (Deep Pan Type) 1968-98	1	8629523
790	34928	Bolt, [TH400] (Filter to Valve Body) (Deep Pan Type) 1968-98	1	8633208
790	34928A	Bolt, [TH400] (Filter) (Shallow Pan Type) 1964-Up	1	8633207
798	34951B	Bolt, [TH400] (Holds Yoke to Output Shaft)	1	
798	34951W	Washer, [TH400] (Under Bolt That Holds Output Shaft Yoke on)	1	
834	34893A	Tube, [TH400] (Filter to Case) (Shallow pan)	1	8626886
839	34996	Pan Magnet, [TH400] (Rectangular)	1	
841	34951	Yoke, [TH400] (Bolt-On Type) (5-7/8" Long)	1	
843	35994	Bracket, [TH400] (Holds Modulator to Case) 1964-Up	1	8626886
843	34890	Bracket, [4L80E] (Solenoid) (2nd Design) 1992-Up	1	8684217
845	34880-01	Reluctor, [4L80E] (Output Speed Sensor) (on Rear Planet)	1	Sonnax
846	34998-01K	Bracket, [4L80E] (Wiring Harness Connector)	1	Sonnax
846	34913-01	Bracket, [4L80E] (Shift Cable) (*Uses Pan Bolts) 1996	1	Sonnax
847	34227C	Gear, [TH400] (Speed-O Drive) (15 Teeth) (Metal)	1	8629547
847	34227J	Gear, [TH400] (Speed-O Drive) (19 Teeth) (Metal) (Yellow)	1	
847	34227M	Gear, [TH400] (Speed-O Drive) (20 Teeth) (Metal) (Gold)	1	
847	34227N	Gear, [TH400] (Speed-O Drive) (21 Teeth) (Metal) (Black)	1	
847	34990	Rotor, [TH400] (Speed-O Reluctor)	1	8655315
848	31420	Gear, [TH400] (Speed-O Driven) (34 Teeth) (Green) (With Plastic Shaft) 1964-Up	1	
848	31421	Gear, [TH400] (Speed-O Driven) (35 Teeth) (Orange) (With Plastic Shaft) 1964-Up	1	9780387
848	31422	Gear, [TH400] (Speed-O Driven) (36 Teeth) (White) (With Plastic Shaft) 1964-Up	1	1359270
848	31423	Gear, [TH400] (Speed-O Driven) (37 Teeth) (Red) (With Plastic Shaft) 1964-Up	1	1359271
848	31424	Gear, [TH400] (Speed-O Driven) (38 Teeth) (Blue) (With Plastic Shaft) 1964-Up	1	1359272
848	31425	Gear, [TH400] (Speed-O Driven) (39 Teeth) (Brown) (With Plastic Shaft) 1964-Up	1	1359273
848	31426	Gear, [TH400] (Speed-O Driven) (40 Teeth) (Black) (With Plastic Shaft) 1964-Up	1	1362048
848	31427	Gear, [TH400] (Speed-O Driven) (41 Teeth) (Yellow) (With Plastic Shaft) 1964-Up	1	1362195
848	31428	Gear, [TH400] (Speed-O Driven) (42 Teeth) (Green) (With Plastic Shaft) 1964-Up	1	1362049
848	31429	Gear, [TH400] (Speed-O Driven) (43 Teeth) (Purple) (With Plastic Shaft) 1964-Up	1	1362196
848	31430	Gear, [TH400] (Speed-O Driven) (44 Teeth) (Gray) (With Plastic Shaft) 1964-Up	1	9780470
848	31431	Gear, [TH400] (Speed-O Driven) (45 Teeth) (Blue) (With Plastic Shaft) 1964-Up	1	9775187
849	34741	Clip, [TH400] (Speed-O Gear) 1964-Up	1	8626089
852	34114	Cushion Spring, [4L80E] (Intermediate Clutch) (8-Inner Tabs) 1997-Up	1	
	K34928	Snap Ring Kit, [TH400] 1964-95	1	31680
	K34928A	Snap Ring Kit, [4L80E] 1991-Up	1	
861	34616	Snap Ring, [4L80E] (Holds 4th Clutch Pressure Plate in) 1991-Up	1	8677887
862	34624	Snap Ring, [4L80E] (Holds 4th Clutch Pressure Retainer in) 1991-Up	1	
864	34617	Snap Ring, [4L80E] (Holds Overrun Clutch Pressure Plate in) 1991-Up	1	8661572
865	34613	Snap Ring, [TH400 / 4L80E] (Holds Overrun Clutch Retainer in Drum) (.079") 1964-00	1	8661568
865	34613A	Snap Ring, [4L80E] (Holds Overrun Clutch Retainer In Drum) (.060") 2001-Up	1	24216149
868	34618	Snap Ring, [4L80E] (Holds Overdrive Planet to Pinion Gear Retainer) 2002-Up	1	8679439
872	34612	Snap Ring, [TH400 / 4L80E] (Center Support to Case) 1964-Up	1	8623437
873	34611	Snap Ring, [TH400 / 4L80E] (Holds Intermediate Clutch Pressure Plate in) (.092") 1964-Up	1	8623149
874	34625	Snap Ring, [TH400 / 4L80E] (Holds Retainer to Center Support) 1964-Up	1	8623153
877	34619	Snap Ring, [TH400 / 4L80E] (Holds Retainer to Forward Drum) 1964-Up	1	8623105

TH400 (3L80)/4L80E/4L85E

878	34615	Snap Ring, [TH400 / 4L80E] (Holds Forward & Direct Clutch Pressure Plate in) 1964-Up	2	8623112
879	34619	Snap Ring, [TH400 / 4L80E] (Holds Direct Clutch Retainer to Drum) 1964-Up	1	8623105
880	34614	Snap Ring, [4L80E] (Holds Turbine Shaft to Overdrive Planet) (.040") 1991-Up	1	8675523
880	34614A	Snap Ring, [4L80E] (Holds Turbine Shaft to Overdrive Planet) (.080") 1991-Up	1	
883	34356	Snap Ring, [TH400 / 4L80E] (Center Support to Case) (Rear) (.042") 1964-Up	1	8626816
886	34620	Snap Ring, [TH400] (Intermediate Sprag Retainer to Drum) 1964-Up	1	8623120
886	34610	Snap Ring, [4L80E] (Intermediate Sprag Retainer to Drum) 1991-Up	1	8675558
889	34621	Snap Ring, [TH400 / 4L80E] (Holds Rear Ring Gear to Main Shaft) 1964-Up	1	8623212
894	34622	Snap Ring, [TH400 / 4L80E] (Holds Output Shaft to Rear Planet) 1964-Up	1	8626173
895	34623	Snap Ring, [4L80E] (Holds Rear Case Seal to Case) 1991-Up	1	8675524
905	K34989	Servo Assembly, [TH400] (Front) (With Aluminum Piston)	1	
905	K34989A	Servo Assembly, [TH400] (Front) (With Steel Piston)	1	
905	K34989E	Servo Assembly, [4L80E] (Front) (With 2.535" Long Pin) 1991-98	1	
905	K34989F	Servo Assembly, [4L80E] (Front) (With 2.735" Long Pin) 1999-Up	1	
906	34946	Spring, [TH400 / 4L80E] (Front) (Servo) 1964-Up	1	8623489
907	34989	Piston, [TH400 / 4L80E] (Front) (Servo) (With 3-tabs) 1965-Up	1	8678537
907	34989E	Piston, [4L80E] (Front) (Servo) (No tabs) 1994-Up	1	24200418
910	K34947	Servo Assembly, [TH400] (Rear) (Flat Piston)	1	
910	K34528	Servo Assembly, [4L80E] (Rear) (With Raised Hump on Piston) 1991-96	1	
910	K34528A	Servo Assembly, [4L80E] (Rear) (Flat Piston) 1997-Up	1	
912	34947	Piston, [TH400] (Rear) (Servo) 1964-Up	1	8623666
912	34528	Piston, [4L80E] (Rear) (Servo) 1991-96	1	8624138
912	34528A	Piston, [4L80E] (Rear) (Servo) 1997-Up	1	24202985
913	34968	Pin, [TH400 / 4L80E] (Rear) (Servo) (4.250" Long) 1964-Up	1	8624139
913	34968C	Pin, [TH400 / 4L80E] (Rear) (Servo) (4.278" Long) 1964-91	1	8627192
913	34968A	Pin, [TH400 / 4L80E] (Rear) (Servo) (4.306" Long) (2-Ring) 1964-Up	1	8624140
913	34968D	Pin, [TH400 / 4L80E] (Rear) (Servo) (4.334" Long) 1964-91	1	8627193
913	34968B	Pin, [TH400 / 4L80E] (Rear) (Servo) (4.362" Long) (3-Ring) 1964-Up	1	8624141
913	34968E	Pin, [TH400 / 4L80E] (Rear) (Servo) (4.387" Long) 1964-91	1	8627194
913	34968F	Pin, [TH400 / 4L80E] (Rear) (Servo) (4.421" Long) 1964-91	1	8627195
913	34968G	Pin, [4L80E] (Rear) (Servo) (4.695" Long) 1992-Up	1	
913	34968H	Pin, [4L80E] (Rear) (Servo) (4.721" Long) 1992-Up	1	
913	34968J	Pin, [4L80E] (Rear) (Servo) (4.750" Long) 1992-Up	1	
913	34968K	Pin, [4L80E] (Rear) (Servo) (4.777" Long) 1992-Up	1	
913	34968L	Pin, [4L80E] (Rear) (Servo) (4.805" Long) 1992-Up	1	
913	34968M	Pin, [4L80E] (Rear) (Servo) (4.833" Long) 1992-Up	1	
913	34968N	Pin, [4L80E] (Rear) (Servo) (4.861" Long) 1992-Up	1	
925	K34105A	Accumulator Assembly, [TH400] (Late, No Legs on piston)	1	
925	K34105	Accumulator Assembly, [TH400] (Early, With 3-Legs on piston)	1	
925	K34105A	Accumulator Assembly, [TH400] **(*Upgrade Service Package With Seals)** 1991-96	1	8680929
926	34945	Spring, [TH400] (Front) (Accumulator) (Yellow) 1967-98	1	8625426
926	34945B	Spring, [TH400] (Front) (Accumulator) (Red)	1	8623654
926	34945A	Spring, [TH400] (Front) (Accumulator) (Blue)	1	8626775
927	34105	Piston, [TH400] (Front) (Accumulator) (Aluminum With 3-Legs) 1965-98	1	8626883
930	K34995	Accumulator Assembly, [4L80E] (3rd & 4th) (1-Tower Type Without The Torque Signal Compensator Valve)	1	

930	K34995A	Accumulator Assembly, [4L80E] (3rd & 4th) (2-Tower Type With The Torque Signal Compensator Valve)	1	
931	34806	Spring, [4L80E] (3rd Clutch) (Accumulator Piston) 1991-Up	1	8675596
932	34108	Piston, [4L80E] (3rd Clutch) (Accumulator) 1991-Up	1	8683088
933	34105-01K	Pin Kit, [TH400 / 4L80E] (Accumulator) (Oversized)	1	Sonnax
933	34105-02K	Pin & Reamer Kit, [TH400 / 4L80E] (Accumulator) (Oversized)	1	Sonnax
934	34995	Cover, [4L80E] (2-3 & 3-4 Accumulator) 1991-93	1	8689993
934	34995A	Cover, [4L80E] (2-3 & 3-4 Accumulator) 1994-95	1	8684220
936	34805	Spring, [4L80E] (4th Clutch) (Accumulator Piston) 1991-Up	1	8675634
937	34107	Piston, [4L80E] (4th Clutch) (Accumulator) 1991-Up	1	8683088
937	34805-01K	Repair Kit, [4L80E] (4th Clutch) (Accumulator) (Piston, Sleeve, Spring) **(*Needs No Machining)**	1	Sonnax
942	34106	Valve, [4L80E] (Torque Signal Compensator) (Spool Valve) 1991-Up	1	8661828
946	34706	Spring, [TH400 / 4L80E] (Rear) (Servo Accumulator) (Blue) 1967-98	1	8624526
946	34706A	Spring, [TH400 / 4L80E] (Rear) (Servo Accumulator (Yellow) (Heavy Duty) 1968-98	1	8624391
946	34706B	Spring, [TH400 / 4L80E] (Rear) (Servo) (Black)	1	8670753
946	34706C	Spring, [TH400 / 4L80E] (Rear) (Servo) (Green / Orange or Violet)	1	8675778
947	34989A	Piston, [4L80E] (Rear) (Accumulator) 1991-96	1	8680929
947	34989B	Piston, [4L80E] (Rear) (Accumulator) 1997-Up	1	24202985
960	34967	Piston, [4L80E] (Overrun Clutch) (Bonded) 1991-Up	1	8661567
961	34807	Piston, [4L80E] (4th Clutch) 1991-Up	1	8661271
962	34810	Piston, [TH400 / 4L80E] (Intermediate Clutch) (Aluminum) (Cast # 86616757)	1	
962	34810A	Piston, [4L80E] (Intermediate Clutch) (Aluminum) (Cast # 24202553)	1	
964	34819	Piston, [TH400] (Forward Clutch) (Early, Aluminum) 1964-98	1	8670199
964	34819A	Piston, [TH400] (Forward Clutch) (Late, Steel)	1	
964	34808	Piston, [4L80E] (Forward Clutch) 1991-96	1	8675508
964	34808A	Piston, [TH400 / 4L80E] (Forward Clutch) (Stamped Steel With Bonded Lip Seal) 1997-Up	1	24204957
965	34832	Piston, [TH400] (Direct Clutch) (5-Clutch) (Early, Aluminum With Check Ball) 1964-65	1	
965	34832A	Piston, [TH400] (Direct Clutch) (5-Clutch) (Late, Steel) 1967-98	1	
965	34832AA	Piston, [TH400] (Direct Clutch) (5-Clutch) (Late, Aluminum Without Check Ball)	1	
965	34832AB	Piston, [TH400] (Direct Clutch) (6-Clutch) (Early, Aluminum With Check Ball)	1	
965	34832B	Piston, [TH400] (Direct Clutch) (6-Clutch) (Late, Steel) 1967-98	1	
965	34809	Piston, [TH400 / 4L80E] (Direct Clutch) (6-Clutch) (Late, Aluminum Without Check Ball) (Disc Spring Type) 1991-96	1	8675511
965	34809A	Piston, 4L80E] (Direct Clutch) (With Bonded Rubber) 1997-Up (*Retro fits to 1991)	1	24204961
970	34969	Retainer W/Spring, [4L80E] (Overrun Clutch Return) 1991-01	1	8661629
970	34969A	Retainer W/Spring, [4L80E] (Overrun Clutch Return) 2002-Up	1	24216366
971	34878	Retainer W/Spring, [4L80E] (4th Clutch) (Return) 1991-Up	1	8661577
972	34888	Spring, [TH400 / 4L80E] (Intermediate Clutch Return) 1991-Up	1	8675518
974	8624101	Spring, [TH400] (Forward & Direct Clutch Return) 1964-Up	16	8624101
974	34840	Retainer W/Spring, [4L80E] (Forward Clutch Return) 1991-Up	1	8661764
975	8624101	Spring, [TH400] (Direct Clutch Return) 1964-Up	16	8624101
975	34840	Retainer W/Spring, [4L80E] (Direct Clutch Return) 1991-Up	1	8661764
982	34930	Retainer, [TH400] (Intermediate Return Spring) 1964-Up	1	8679935
984	34931	Retainer, [TH400] (Forward Return Spring) 1964-Up	1	
985	34932	Retainer, [TH400] (Direct Return Spring) 1964-Up	1	
991	K34676	Linkage Assembly, [TH400] (Internal) (O-Ring Type) 1964-65	1	
991-1	34687	Lever, [TH400] (Manual Detent Spring) 1964-Up	1	8625773

TH400 (3L80)/4L80E/4L85E

991-4	34675	Shaft, [TH400] (Manual Lever) 1964-Up	1	8679990
991	K34676A	Linkage Assembly, [TH400] (Internal) (Seal Type) 1965-Up	1	
991	K34676E	Linkage Assembly, [4L80E] (Internal) 1991-95	1	
991	34675E	Shaft, [4L80E] (Manual Lever) 1991-94	1	
991	K34676F	Linkage Assembly, [4L80E] (Internal) 1996-Up	1	
992	34675AA	Shift Lever, [TH400] (External) (Column Shift) 1964-Up	1	
992	34675EA	Shift Lever, [4L80E] (External) (Column Shift) 1991-Up	1	
994	34677	Actuator Rod, [4L80E] (Park Pawl) (*Updated)	1	24200173
995	K34678	Park Pawl Assembly, [TH400] 1964-Up	1	
995	K34678A	Park Pawl Assembly, [4L80E] 1991-Up	1	
995	34678S	Spring, [TH400] (Park Pawl) 1964-Up	1	
995	34628SA	Spring, [4L80E] (Park Pawl Return) (1st Design)	1	
995	34678SB	Spring, [4L80E] (Park Pawl Return) (2nd Design)	1	
996	34280	Fitting, [TH400] (Cooler Line) (3/8” Lines) (With Pipe Threads) 1964-77	2	
996	34280B	Fitting, [TH400] (Cooler Line) (5/16” Lines) (With Pipe Threads) 1964-77	2	
996	34280C	Fitting, [TH400 / 4L80E] (Cooler Line) (5/16” Lines) (With Machine Threads) 1978-96	2	
996	34280D	Fitting, [4L80E] (Cooler Line) (Screw-In) (With Machine Threads) 1997-98	1	
996	34918-01K	Cooler Line Conversion Kit, [4L80E] (*Converts Late Cases to The Early Style)	1	Sonnax
996	34280A	Fitting, [4L80E] (Front) (Cooler Line) (Push-In Type) 1997-Up	1	24205102
996	34281A	Fitting, [4L80E] (Front) (Cooler Line) (Center) (Push-In Type) 1997-Up	1	Teckpak
999	K34679	Oil Tube Set, [TH400] (Valve Body to Case) 1964-Up	1	8679342
999	34679E	Oil Tube, [4L80E] (2WD) (Valve Body to Case) 1991-Up	1	
999	34679A	Bracket, [4L80E] (Holds Oil Tubes on) 1997-Up	1	
999	34679F	Oil Tube, [4L80E] (4x4) (Valve Body to Case) 1991-Up	1	

NOTES

4T40E/4T45E

FWD 4 Speed

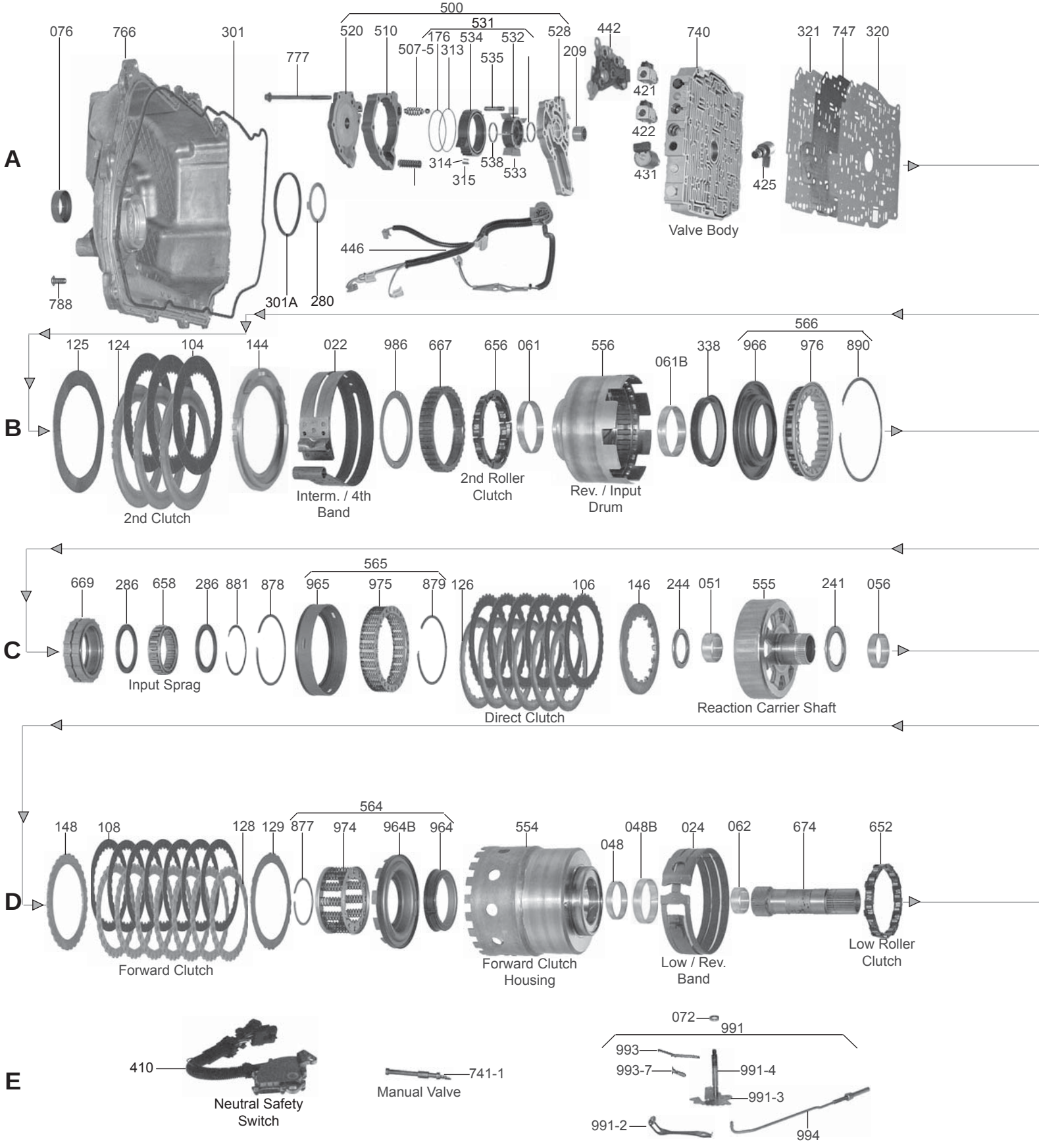

FWD 4 Speed

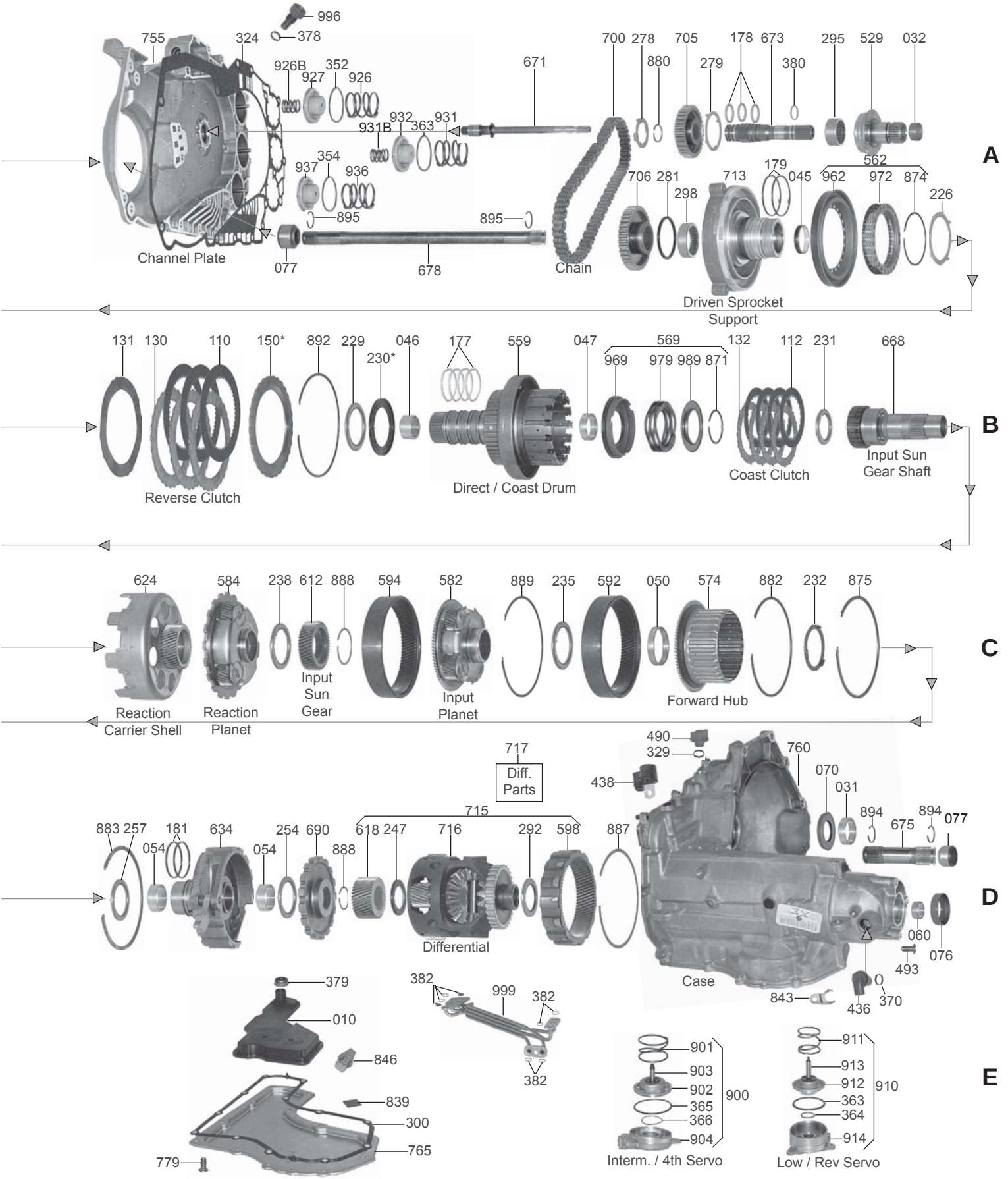
A
B
C
D
E
Channel Plate
Chain
Driven Sprocket Support
Reverse Clutch
Direct / Coast Drum
Coast Clutch
Input Sun Gear Shaft
Reaction Carrier Shell
Reaction Planet
Input Sun Gear
Input Planet
Forward Hub
Diff. Parts
Differential
Case
Interm. / 4th Servo
Low / Rev Servo

4T40E/4T45E

ILL#	PART#	DESCRIPTION	QTY	REF #
		OVERHAUL KIT		
	K33900P	Overhaul Kit, [4T40E] (With Pistons) 1995-Up	1	
	K33900	Overhaul Kit, [4T40E] (Without Pistons) 1995-Up	1	
		MASTER L/STEEL KIT		
	DK3300P-S	Master L/Steels Kit, [4T40E] (With Pistons) 1995-Up	1	
	DK3300-S	Master L/Steels Kit, [4T40E] (Without Pistons) 1995-Up	1	
		MASTER W/STEEL KIT		
	DK3300P	Master W/Steels Kit, [4T40E] (With Pistons) 1995-Up	1	
	DK3300	Master W/Steels Kit, [4T40E] (Without Pistons) 1995-Up	1	
		FILTER		
010	33710	Filter, [4T40E] 1995-Up	1	24203770
		FILTER KIT		
	FK33710	Filter Kit, [4T40E] (With Bonded Rubber Pan Gasket) 1995-Up	1	
		MISC FILTERS		
016	33760	Screen, [4T40E] (Snaps Into Valve Body Seperator Plate) 1995-Up	1	
		BANDS		
022	33701	Band, [4T40E] (Intermediate) (4th) 1995-Up	1	8684403
024	84700A	Band, [4T40E] (Low / Reverse) 1995-Up	1	8651614
		BUSHINGS		
	K33901	Bushing Kit, [4T40E] 1995-Up	1	
031	75005A	Converter Hub, 1995-Up	1	
032	65002	Bushing, [4T40E] (Converter Reactor) (Front) 1995-Up	1	8628915
045	33005	Bushing, [4T40E] (Driven Sprocket Support) (Rear) 1995-Up	1	
046	33012	Bushing, [4T40E] (Direct / Coast Clutch Drum) (Front) 1995-Up	1	
047	33013	Bushing, [4T40E] (Direct / Coast Clutch Drum) (Rear) 1995-Up	1	
048	33010	Bushing, [4T40E] (Forward Drum) (Front) (Small One) 1995-Up	1	
048B	33011	Bushing, [4T40E] (Forward Drum) (Rear) (Large One) 1995-Up	1	
050	33004	Bushing, [4T40E] (Forward Clutch Hub) 1995-Up	1	
051	33007	Bushing, [4T40E] (Reaction Carrier Shell) (Front) 1995-Up	1	
054	33006	Bushing, [4T40E] (Forward Drum Support) (Front & Rear) 1995-Up	2	
056	33008	Bushing, [4T40E] (Reaction Carrier Shell) (Rear) 1995-Up	1	
060	75019	Bushing, [4T40E] (Case) 1995-Up	1	
061	33002	Bushing, [4T40E] (Reverse Input Drum) (Front) 1995-Up	1	
061B	33003	Bushing, [4T40E] (Reverse Input Drum) (Rear) 1995-Up	1	
062	33009	Bushing, [4T40E] (Final Drive Sun Gear Shaft) (Front) 1995-Up	1	
		METAL CLAD SEALS		
070	75151A	Seal, [4T40E] (Front) (Converter) 1995-Up	1	8664812
072	84511	Seal, [4T40E] (Manual Shaft) 1995-Up	1	
076	33152	Seal, [4T40E] (Axle) (Both Sides) 1995-Up	2	
077	33152A	Seal/Sleeve, [4T40E] (Axle) (Inner) (Both Sides) 1995-Up	2	
		FRICTION CLUTCH		

104	33104	Friction, [4T40E] (2nd Clutch) (.070") 1995-Up	3	24209723
106	33102	Friction, [4T40E] (Direct Clutch) (.070") (With 36 External Teeth) 1995-Up	4-6	24209727
108	33100	Friction, [4T40E] (Forward Clutch) (.069") (30 Teeth) 1995-Up	7	8684444
110	33106	Friction, [4T40E] (Reverse Clutch) (.070") 1995-Up	3	8684266
112	33108	Friction, [4T40E] (Coast Clutch) (.070") 1995-Up	4	8684282
	K33100	Friction Module, [4T40E] (Hi-Energy) 1995-Up	1	
		STEEL CLUTCH		
124	33107	Steel, [4T40E] (2nd Clutch) (.089") (8 Teeth) 1995-Up	3	24200790
125	33109	Steel, [4T40E] (2nd Clutch) (Waved) 1995-Up	1	24200298
126	33105	Steel, [4T40E] (Direct Clutch) (.074") (With 16 Internal Teeth) 1995-Up	4-6	8685879
128	33101	Steel, [4T40E] (Forward Clutch) (.069") (30 Teeth) 1995-Up	7	8684445
129	33103	Steel, [4T40E] (Forward Clutch) (.038") (12 Teeth) (Waved) 1995-Up	1	24200467
130	33111	Steel, [4T40E] (Reverse Clutch) (.088") (30 Teeth) 1995-Up	3	
130	33111A	Steel, [4T40E] (Reverse Clutch) (.088") (30 Teeth) (Turbulator) 1998-Up	3	
131	33113	Steel, [4T40E] (Reverse Clutch) (.043") (8 Teeth) (Waved) 1995-Up	1	
132	33115	Steel, [4T40E] (Coast Clutch) (.069") (12 Teeth) 1995-Up	4	8685874
	K33110	Steel Module, [4T40E] 1995-Up	1	
		CLUTCH PRESSURE PLATES		
144	33133	Pressure Plate, [4T40E] (2nd Clutch) (.251") 1995-Up	1	8684324
146	33131	Pressure Plate, [4T40E] (Direct Clutch) (.204") (With 16 Internal Teeth) 1995-Up	1	8685875
148	33130	Pressure Plate, [4T40E] (Forward Clutch) (.122") (30 Teeth) 1995-Up	1	24200595
150	33132	Pressure Plate, [4T40E] (Reverse Clutch) (5.0mm) (1.26") 1995-Up	1	24200756
150	33132A	Pressure Plate, [4T40E] (Reverse Clutch) (4.5mm) (1.77") 1995-Up	1	24200950
150	33132B	Pressure Plate, [4T40E] (Reverse Clutch) (5.64mm) (2.22") 1995-Up	1	24200951
		OIL SEALING RINGS		
	K33903	Ring Kit, [4T40E] (Teflon) 1995-Up	1	
177	33307	Ring, [4T40E] (Direct / Coast Clutch Drum) (Solid) (Teflon) 1995-Up	4	8684272
178	75301C	Ring, [4T40E] (Turbine Shaft) (Front) (Solid) (Teflon) 1995-Up	1	8637170
178	75301D	Ring, [4T40E] (Turbine Shaft) (Rear) (Solid) (Teflon) 1995-96	2	8643058
178	33301	Ring, [4T40E] (Turbine Shaft) (Rear) (Solid) (Teflon) 1997-Up	2	
179	33300	Ring, [4T40E] (Driven Sprocket Support) (Vespel) (Teflon) 1995-Up	2	24201613
181	33308	Ring, [4T40E] (Forward Drum Support) (Teflon) 1995-Up	2	24204223
		WASHERS & BEARINGS		
	K33907	Washer Kit, [4T40E] 1995-Up	1	
	K33906	Bearing Kit, [4T40E] 1995-Up	1	
209	33000-01	Bearing, [4T40E] (Pump Shaft Needle) (With Seal) 1995-Up (1.065"OD) (.705" Wide)	1	Sonnax
226	33415	Washer, [4T40E] (Driven Sprocket Support to Reverse Input Drum) (Plastic) (8-Tab) 1995-Up	1	
229	84407	Bearing, [4T40E] (Driven Sprocket Support to Direct /Coast Drum) 1995-Up	1	8644206
230	33418A	Washer, [4T40E] (Driven Sprocket Support to Direct /Coast Drum) (.061") (Brown) (Plastic) 95-Up	1	
230	33418B	Washer, [4T40E] (Driven Sprocket Support to Direct /Coast Drum) (.072") (Grey) (Plastic) 95-Up	1	
230	33418C	Washer, [4T40E] (Driven Sprocket Support to Direct /Coast Drum) (.084") (Natural) (Plastic) 1995-Up	1	
230	33418D	Washer, [4T40E] (Driven Sprocket Support to Direct /Coast Drum) (.096") (Black) (Plastic) 95-Up	1	
230	33418E	Washer, [4T40E] (Driven Sprocket Support to Direct /Coast Drum) (.107") (Orange) (Plastic) 1995-Up	1	
230	33418F	Washer, [4T40E] (Driven Sprocket Support to Direct /Coast Drum) (.119") (Violet) (Plastic) 95-Up	1	
230	33418G	Washer, [4T40E] (Driven Sprocket Support to Direct/Coast Drum) (.131") (Yellow) (Plastic) 95-Up	1	
230	33418H	Washer, [4T40E] (Driven Sprocket Support to Direct /Coast Drum) (.142") (Red) (Plastic) 95-Up	1	

230	33418J	Washer, [4T40E] (Driven Sprocket Support to Direct/Coast Drum) (.154") (Green) (Plastic) 95-Up	1	
231	33460A	Bearing, [4T40E] (Direct /Coast Clutch Drum to Input Sun Gear Shaft) (Front) 1995-Up	1	
232	33416	Washer, [4T40E] (Forward Hub to Forward Drum) (Plastic) (3-Tab) 1995-Up	1	
235	84407	Bearing, [4T40E] (Input Planet to Forward Hub) 1995-Up	1	8644206
238	33462A	Bearing, [4T40E] (Reaction Planet to Input Sun Gear) 1995-Up	1	
241	33463A	Bearing, [4T40E] (Reaction Carrier Shaft to Sun Shell) 1995-Up	1	
244	33464A	Bearing, [4T40E] (Input Sun Gear Shaft to Reaction Carrier Shell) (Rear) 1995-Up	1	
247	65409	Bearing, [4T40E / 4T45E] (Differential to Sun Gear) (2.000"OD) 1995-Up	1	
247	84454A	Bearing, [4T40E / 4T45E] (Differential to Sun Gear) (2.191"OD) 1995-Up	1	
247	84454B	Bearing, [4T40E / 4T65E] (Differential to Sun Gear) (2.125"OD)	1	
254	33467A	Bearing, [4T40E] (Forward Drum Support to Parking Gear) 1995-Up	1	
257	84368A	Bearing, [4T40E] (Forward Drum to Support) 1995-Up	1	
278	75413A	Washer, [4T40E] (Drive Sprocket to Case Cover) (Plastic) (4-Tab) 1995-Up	1	
279	75412	Washer, [4T40E] (Drive Sprocket to Support) 1995-Up	1	8652841
280	33411	Washer, [4T40E] (Driven Sprocket to Side Cover) 1995-Up	1	
281	75439	Washer, [4T40E] (Driven Sprocket to Support) 1995-Up	1	8637227
292	75746	Bearing, [4T40E] (Differential to Case) 1995-Up	1	8631362
295	75086	Caged Needle Bearing, [4T40E] (Converter Reactor) 1995-Up	1	24214158
298	75090	Caged Needle Bearing, [4T40E] (Driven Sprocket Support) 1995-Up	1	8631190
		GASKETS & RUBBER COMPONENTS		
300	33500M	Gasket, [4T40E] (Bottom Pan) (Bonded) 1995-Up	1	24203590
300	33500	Gasket, [4T40E] (Bottom Pan) (Cork) 1995-Up	1	
301	33502	Gasket, [4T40E] (Side Cover) (Inner) (Molded Rubber) 1995-Up	1	8685154
301	33501	Gasket, [4T40E] (Side Cover) (Outer) (Molded Rubber) 1995-Up	1	24200478
320	33525	Gasket, [4T40E] (Valve Body Spacer Plate to Case Cover) 1995-03	1	24216778
320	33525A	Gasket, [4T40E] (Valve Body Spacer Plate to Case Cover) 2004-05	1	24216017
320	33525B	Gasket, [4T40E] (Valve Body Spacer Plate to Case Cover) 2006-Up	1	24233223
321	33526	Gasket, [4T40E] (Valve Body to Spacer Plate) 1995-03	1	24216779
321	33526A	Gasket, [4T40E] (Valve Body to Spacer Plate) 2004-05	1	24216019
321	33526B	Gasket, [4T40E] (Valve Body to Spacer Plate) 2006-Up	1	24233222
324	33530	Gasket, [4T40E] (Case to Case Cover) 1995-Up	1	24201096
338	33823	Piston, [4T40E] (Reverse Clutch) (Inner) (Bonded) **(*Not Reusable if Taken Out)** 1995-Up	1	24205041
352	33128	D-Ring, [4T40E] (1-2 Accumulator Piston) 1995-Up (*Also Fits 2-3 & 3-4 Accumulator)	1-3	24200739
353	33128	D-Ring, [4T40E] (2-3 Accumulator Piston) 1995-Up	1	24200739
354	33128	D-Ring, [4T40E] (3-4 Accumulator Piston) 1995-Up	1	24200739
363	33135	Lip Seal, [4T40E] (Low / Reverse Servo Piston) 1995-Up	1	8684674
364	33140	O-Ring, [4T40E] (Low / Reverse Servo Cover) 1995-Up	1	8684394
365	33134	Lip Seal, [4T40E] (Intermediate / 4th Servo Piston) 1995-Up	1	8684673
366	33129	O-Ring, [4T40E] (Intermediate / 4th Servo Cover) 1995-Up	1	8678473
379	33548	Seal, [4T40E] (Filter) 1995-Up	1	8684467
380	13503A	O-Ring, [4T40E] (Turbine Shaft Goes Behind Splines) (4 & 6 Cylinder Type)	1	8678453
	33139	Seal, [4T40E] (Cooler Line to Case)	2	
		TECHNICAL MANUALS		
	TM4T40-E	Tech Manual, [4T40E] 1995-Up	1	ATSG
		ELECTRICAL COMPONENTS		
410	33958	Switch, [4T40E] (Neutral Safety) 1995	1	12450050
410	33958A	Switch, [4T40E] (Neutral Safety) 1996	1	11516166

410	33958B	Switch, [4T40E] (Neutral Safety) 1997-03	1	12450161
421	33955	Solenoid, [4T40E] (1-2 Shift) 1995-Up (*Also 2-3 Shift)	1-2	24207236
422	33955	Solenoid, [4T40E] (2-3 Shift) 1995-Up	1	24207236
425	77942	Solenoid, [4T40E] (Lock-Up) (TCC) 1995-Up	1	24212690
431	33946	Solenoid, [4T40E] (Pressure Control) (EPC) 1995-02	1	10478146
431	33946A	Solenoid, [4T40E] (Pressure Control) (EPC) 2003-Up	1	24225825
436	33956	Sensor, [4T40E] (Vehicle Speed) 1995-Up	1	24207507
438	33957	Sensor, [4T40E / 4T45E] (Input Speed) (Aluminum Bracket Has 1-Bolt Hole & Is Square on the End) (.810" Long) (*All 4-Cylinder) (*Some 6-Cylinder) (*ID Stamp 32T or 33T) 1995-Up	1	24218077
438	33957A	Sensor, [4T40E / 4T45E] (Input Speed) (Aluminum Bracket Has 1-Bolt Hole & Is Round on the End) (.725"Long) (6-Cylinder) (*ID Stamp 35T) 1997-Up	1	10456546
442	33943	Switch Assembly, [4T40E] (Manifold Pressure) 1995-03	1	24226580
442	33943A	Switch Assembly, [4T40E] (Manifold Pressure) 2004-Up	1	24217544
446	33959	Wire Harness, [4T40E] (Internal) (With Case Connector) (14-Prong Case Connector with (5) 2-Prong Connectors, & (1) 6-Prong Connector) 1995-Up	1	21241202
		MISC. COMPONENTS		
490	33999	Fill Plug, [4T40E] (OiL) 1995-Up	1	
		HARD PARTS		
500	33915	Pump Assembly, [4T40E] (Complete) 1995-Up	1	24208987
529	33841	Converter Reactor, [4T40E] 1995-Up	1	8685660
554	33831	Drum, [4T40E] (Forward Clutch) 1995-Up	1	24203622
555	33734	Reaction Carrier Shaft, [4T40E] (Holds Direct Friction Splines Into Reaction Carrier) 1995-Up	1	
556	33830	Drum, [4T40E] (Reverse Input Clutch) (With Sprag) (3-Clutch) 1995-Up	1	
559	33832	Drum, [4T40E] (Direct / Coast Clutch) 1995-Up	1	
574	33322	Hub, [4T40E] (Forward Clutch) 1995-Up	1	
582	33888	Planet, [4T40E] (Input) (Rear) (46 Tooth Sun Gear) 1995-Up	1	24208590
584	33747	Planet, [4T40E] (Reaction) (Front) (42 Tooth Sun Shell) 1995-Up	1	24208584
592	33713	Ring Gear, [4T40E] (Input Planet) (Rear) 1995-Up	1	8684574
594	33713	Ring Gear, [4T40E] (Reaction Planet) (Front) 1995-Up	1	8684574
598	33952	Ring Gear, [4T40E] (Final Drive) (78 Teeth) (Left Angled) 1995-96	1	
598	33952A	Ring Gear, [4T40E] (Final Drive) (78 Teeth) (Right Angled) 1997-Up	1	
612	33872	Sun Gear, [4T40E] (Input) (46 Teeth) 1995-Up	1	8684581
618	33884A	Sun Gear, [4T40E] (Final Drive) (34 Teeth) (Left Angled) (2.170"OD) 1995-96	1	
618	33884B	Sun Gear, [4T40E] (Final Drive) (34 Teeth) (Right Angled) (2.170"OD) 1997-Up	1	
618	33884C	Sun Gear, [4T40E] (Final Drive) (38 Teeth) (Left Angled) (2.410"OD) 1995-96	1	
618	33884D	Sun Gear, [4T40E] (Final Drive) (38 Teeth) (Right Angled) (2.410"OD) 1997-Up	1	
624	33735	Reaction Sun Shell, [4T40E] (With 42 Tooth Sun Gear) 1995-Up	1	
634	33951	Support, [4T40E] (Forward Drum) (Cast # 24205284) (17-Roller Sprag Type) 1998-Up	1	24204222
634	33951A	Support, [4T40E] (Forward Drum) (Cast # 24205284) (16-Roller Sprag Type) 1995-97	1	24204810
634	33951B	Support, [4T40E] (Forward Drum) (Cast # 24200088) (16-Roller Sprag Type) 1995-97	1	24210106
652	33727	Sprag, [4T40E] (Low Roller Clutch) (16-Rollers) (Black Plastic Cage) 1995-97	1	7471005
652	33727A	Sprag, [4T40E] (Low Roller Clutch) (17-Rollers) (Grey Plastic Cage) 1998-Up	1	7471035
656	33724	Sprag, [4T40E] (2nd Roller Clutch) (With Cage) 1995-Up	1	7471006
658	33725	Sprag, [4T40E] (Input) (22-Elements) 1995-Up	1	24203617
667	33941	Outer Race, [4T40E] (2nd Roller Clutch) 1995-Up	1	
668	33945	Shaft, [4T40E] (Input Sun Gear Shaft) 1995-Up	1	24203613
669	33944	Outer Race, [4T40E] (Input Sprag) 1995-Up	1	24200497
671	33916	Shaft, [4T40E] (Pump Drive) (.550" Thick) (Steel Race) 2002-Up (New Design) (*Retros to 1995)	1	24218296

673	33859	Turbine Shaft, [4T40E] 1995-Up	1	8652382
674	33950	Shaft, [4T40E] (Final Drive Sun Gear Shaft) 1995-Up	1	24201609
675	33887A	Output Shaft, [4T40E] (Short) (External) 1995-Up	1	24200734
678	33887	Output Shaft, [4T40E] (Long) (Internal) 1995-Up	1	24200733
690	33952	Gear, [4T40E] (Parking Gear) 1995-Up	1	24204708
700	33885	Chain, [4T40E] (4 Cylinder) (3/4" Wide) 1995-03	1	24200738
700	33885B	Chain, [4T40E] (4 Cylinder) (5/8" Wide) 11/2003-Up	1	
700	33885A	Chain, [4T45E] (6 Cylinder) (7/8" Wide) (Mouse Ear Links) 1999-Up	1	
705	33815	Sprocket, [4T40E] (Drive) (32 Teeth) 1995-Up	1	24204709
705	33817	Sprocket, [4T40E] (Drive) (35 Teeth) (.660" Thick) 1995-Up	1	
705	33817A	Sprocket, [4T40E] (Drive) (35 Teeth) (.775" Thick) 1995-Up	1	
705	33816	Sprocket, [4T40E] (Drive) (33 Teeth) (.660" Thick) 1995-Up	1	
705	33816A	Sprocket, [4T40E] (Drive) (33 Teeth) (.775" Thick) 1995-Up	1	
705	33818	Sprocket, [4T40E] (Drive) (37 Teeth) 1995-Up	1	
705	33819	Sprocket, [4T40E] (Drive) (38 Teeth) 1995-Up	1	
706	33813	Sprocket, [4T40E] (Driven) (38 Teeth) 1995-Up	1	24200079
706	33811	Sprocket, [4T40E] (Driven) (35 Teeth) (.660" Thick) 1995-Up	1	
706	33811A	Sprocket, [4T40E] (Driven) (35 Teeth) (.770" Thick) 1995-Up	1	
706	33812	Sprocket, [4T40E] (Driven) (37 Teeth) (.660" Thick) 1995-Up	1	
706	33812A	Sprocket, [4T40E] (Driven) (37 Teeth) (.775" Thick) 1995-Up	1	
713	33870	Support, [4T40E] (Driven Sprocket) (Cast # 8684348) (Without Check Ball) 1995-96	1	
713	33870A	Support, [4T40E] (Driven Sprocket) (Cast # 24207153 or 24216212) (With Check Ball) 1997-Up	1	24207143
716	33890A	Differential, [4T40E] (38 Teeth) (Left Angle Sun Gear) (.705"OD Pin) (3.05 Ratio) (30 Teeth Pick-Up) 1995-96	1	
716	33890B	Differential, [4T40E] (38 Teeth) (Right Angle Sun Gear) (.705"OD Pin) (3.05 Ratio) (30 Teeth Pick-Up) 1997-Up	1	
716	33890C	Differential, [4T40E] (34 Teeth) (Left Angle Sun Gear) (.705"OD Pin) (3.29 Ratio) (31 Teeth Pick-Up) 1995-96	1	
716	33890D	Differential, [4T40E] (34 Teeth) (Left Angle Sun Gear) (.705"OD Pin) (3.29 Ratio) (29 Teeth Pick-Up) 1995-96	1	
716	33890E	Differential, [4T40E] (34 Teeth) (Left Angle Sun Gear) (.705"OD Pin) (3.29 Ratio) (30 Teeth Pick-Up) 1995-96	1	
716	33890F	Differential, [4T40E] (34 Teeth) (Right Angle Sun Gear) (.705"OD Pin) (3.29 Ratio) (30 Teeth Pick-Up) 1997-Up	1	
716	33890G	Differential, [4T40E] (34 Teeth) (Right Angle Sun Gear) (.705"OD Pin) (3.29 Ratio) (31 Teeth Pick-Up) 1997-Up	1	
		VALVE BODIES (REBUILT)		
740	GM-4625	Valve Body, [4T40E] (Casting # 24205471) 1995-96	1	
740	GM-4626	Valve Body, [4T40E] (Casting # 24209130) 1997-01	1	
740	GM-4627	Valve Body, [4T40E] (Casting # 24214698) 2002-Up	1	
740	GM-4628	Valve Body, [4T45E] (Casting # 24216020) 2003-Up	1	
		VALVE BODIES		
740	33886	Valve Body, [4T40E] (With 4-Solenoids) (EPC Solenoid Is 1.320"OD) (Cast # 24205471) 1995-96	1	2420547
740	33886A	Valve Body, [4T40E] (With 4-Solenoids) (EPC Solenoid Is 1.320"OD) (Cast # 24209130) 1997-01	1	24209130
740	33886B	Valve Body, [4T40E] (Cast # 24214698) 2002-Up	1	24214698
740	33886C	Valve Body, [4T45E] (Cast # 24216020) 2003-12/12/05	1	24216020
740	33886D	Valve Body, [4T45E] (Cast # 24233226) 12/13/05-Up	1	

		VALVE BODY COMPONENTS		
741	33683	Manual Valve, [4T40E] (Goes in Channel Plate) 1995-Up	1	
	33000-02	Sleeve, [4T40E] (TCC Regulator Apply Valve) **(*Use With 33000-TL Reamer)**	1	Sonnax
	33000-03	Sleeve, [4T40E] (TCC Control Valve Sleeve) **(*Must Use F-3300-TL & VB-FIX)**	1	Sonnax
	F-33000-TL	Reamer Set, **(*Use With 33000-02)**	1	Sonnax
	33886-01K	Sleeve & Spring, [4T40E] (Actuator Feed Limit Valve) **(*Must Use T-33886-TL Reamer)**	1	Sonnax
	33886-TL	Reamer Set, **(*Use With 33886-01K)**	1	Sonnax
	33886-02	Valve, [4T40E] (Pressure Regulator) (Oversize) **(*Must Use 33886-TL2 Reamer)**	1	Sonnax
	33886-TL2	Reamer Set, **(*Use With S14741PA-1)**	1	Sonnax
	4T40E-PRT	Pressure Regulator Kit, [4T40E] (Fixes 3-Valve Bodies) (Contains: 1-Guide, 1-Reamer, 3-Pair Valves, Springs & Seats, 3-Pump Priming Springs)	1	Transgo
	4T40E-PR5	Pressure Regulator Refill Kit, [4T40E] (Contains: 5-Pair Valve, Springs & Seats & Pump Slide Springs)	1	Transgo
	33886-03K	Valve Kit, [4T40E / 4T45E] (Boost Valve & Sleeve)	1	Sonnax
	33000-TL	Reamer Kit, [4T40E] (TCC Regulator Apply Sleeve)	1	Sonnax
747	33599	Plate, [4T40E] (Valve Body Separator) 1995-12/12/05	1	24205050
747	33599A	Plate, [4T45E] (Valve Body Spacer) (Bonded) (Stamped 24235006 or 24238390) 12/13/05-Up	1	
		HARD PARTS (Continued)		
755	33757A	Channel Plate, [4T40E] (1.103"ID Sleeve) (Cast # 24200961) 1995-96	1	24213577
755	33757B	Channel Plate, [4T40E] (1.128"ID Sleeve) (Cast # 24208122) 1997-98	1	24210194
755	33757C	Channel Plate, [4T40E] (Cast # 24216013) 1999-12/12/05	1	24213193
755	33757D	Channel Plate, [4T45E] (Cast # 24233229) 12/13/05-Up	1	
	33530-01K	Sleeve, [4T40E] (Channel Plate) (1.128"ID) 1997-Up	1	Sonnax
	33099	Sleeve, [4T40E] (Channel Plate) (1.103"ID) 1995-96	1	
	33099A	Sleeve, [4T40E] (Channel Plate) (1.128"ID) 1997-Up	1	
760	33790A	Case, [4T40E] (2.4L) (V-6) (Cast # 24201966) 1995-00	1	24207691
760	33790B	Case, [4T40E] (2.2L) (Cast # 24208105) 1997-00	1	24207685
760	33790C	Case, [4T40E] (Quad 4) (Cast # 24201960) 1995-Up	1	
760	33790D	Case, [4T40E] (Quad 4) (Cast # 24208106) 1995-Up	1	
760	33790E	Case, [4T40E / 4T45E] (Quad 4) (Cast # 24208156) 1994-Up	1	
765	33801	Pan, [4T40E] (Bottom) 1995-Up	1	
766	33805	Pan, [4T40E] (Side) 1995-96	1	24203605
766	33805A	Pan, [4T40E] (Side) 1997-98	1	24213577
766	33805B	Pan, [4T40E] (Side) (Cast # 24207184) 1999-03	1	24213141
766	33805C	Pan, [4T40E] (Side) (Cast # 24222115) 2004-Up	1	
	K33928	Snap Ring Kit, [4T40E / 4T45E] 1995-Up	1	
871	33601	Snap Ring, [4T40E] (Holds Coast Clutch Spring Retainer in Drum) 1995-Up	1	
874	33602	Snap Ring, [4T40E] (Holds 2nd Clutch Spring Retainer in Support) 1995-Up	1	
875	33603	Snap Ring, [4T40E] (Holds Forward Clutch Pressure Plate in Drum) 1995-Up	1	
877	33604	Snap Ring, [4T40E] (Holds Forward Clutch Spring Retainer in Drum) 1995-Up	1	
878	33605	Snap Ring, [4T40E] (Holds Direct Clutch Pressure Plate in Drum) 1995-Up	1	
879	33606	Snap Ring, [4T40E] (Holds Direct Clutch Spring Retainer in Drum) 1995-Up	1	
880	33607	Snap Ring, [4T40E] (Holds Drive Sprocket to Turbine Shaft) 1995-Up	1	8631210
881	33608	Snap Ring, [4T40E] (Holds Input Sprag to Outer Race) 1995-Up	1	
882	33609	Snap Ring, [4T40E] (Holds Input Planet Ring Gear to Forward Hub) (.088") 1995-Up	1	

4T40E/4T45E

883	33610	Snap Ring, [4T40E] (Holds Forward Drum Support to Case) 1995-Up	1	
887	33611	Snap Ring, [4T40E] (Holds Differential Ring Gear to Case) 1995-Up	1	
888	33612	Snap Ring, [4T40E] (Holds Input Sun Gear to Input Sun Gear Shaft) 1995-Up (*Also Holds Final Drive Sun Gear to Final Drive Sun Gear Shaft)	2	
889	33613	Snap Ring, [4T40E] (Holds Reaction Planet Ring Gear to Input Planet) (.058") 1995-Up	1	
890	33614	Snap Ring, [4T40E] (Holds Reverse Input Retainer in Drum) 1995-Up	1	
892	33615	Snap Ring, [4T40E] (Holds Reverse Clutch Pressure Plate in Drum) 1995-Up	1	
894	33616	Snap Ring, [4T40E] (Output Shaft) (Short) (External) 1995-Up	2	
895	33617	Snap Ring, [4T40E] (Output Shaft) (Long) (Internal) 1995-Up	2	
900	K33895	Servo Assembly, [4T40E] (Intermediate / 4th Servo) (Cover Cast # 24201880) 1995-Up	1	
910	K33896	Servo Assembly, [4T40E] (Low / Reverse Servo) (Cover Cast # 24201882) 1995-Up	1	
926	33960A	Spring, [4T40E] (1-2 Accumulator) (Outer) (1.830" Long) 1995-Up	1	8685241
926B	33960B	Spring, [4T40E] (1-2 Accumulator Cushion) (Inner) (.850" Long) 1995-Up	1	
927	K069	Piston, [4T40E] (1-2 Accumulator) 1995-Up (*Also Fits 2-3 & 3-4 Accumulator)	1-3	Superior
931	33961A	Spring, [4T40E] (2-3 Accumulator) (Outer) (1.670" Long) 1995-Up (*Also Fits 3-4 Accumulator)	1-2	8685240
931B	33961B	Spring, [4T40E] (2-3 Accumulator Cushion) (Inner) (1.950" Long) 1995-Up	1	
932	K069	Piston, [4T40E] (2-3 Accumulator) 1995-Up	1	Superior
936	33961A	Spring, [4T40E] (3-4 Accumulator) (Outer) (1.670" Long) 1995-Up	1	8685240
937	K069	Piston, [4T40E] (3-4 Accumulator) 1995-Up	1	Superior
962	33821	Piston, [4T40E] (2nd Clutch) (Bonded) 1995-Up	1	
	K33820	Piston Set, [4T40E] (Bonded) 1995-Up	1	
964	33826	Piston, [4T40E] (Forward Clutch) (Inner) (Bonded) **(*Not Reusable if Taken Out)** 1995-Up	1	
964B	33825	Piston, [4T40E] (Forward Clutch) (Outer) (Bonded) 1995-Up	1	
965	33824	Piston, [4T40E] (Direct Clutch) (Outer) (Bonded) 1995-Up	1	
966	33822	Piston, [4T40E] (Reverse Clutch) (Outer) (Bonded) 1995-Up	1	
338	33823	Piston, [4T40E] (Reverse Clutch) (Inner) (Bonded) 1995-Up	1	
969	33820	Piston, [4T40E] (Coast Clutch) (Inner) (Bonded) 1995-Up	1	
972	33970	Spring & Retainer, [4T40E] (2nd Clutch) 1995-Up	1	
974	33971	Spring & Retainer, [4T40E] (Forward Clutch) 1995-Up	1	
975	33972	Spring & Retainer, [4T40E] (Direct Clutch) 1995-Up	1	
976	33973	Spring & Retainer, [4T40E] (Reverse Clutch) 1995-Up	1	
979	33974	Spring, [4T40E] (Coast Clutch Return) 1995-Up	1	
989	33976	Retainer, [4T40E] (Coast Clutch Spring) 1995-Up	1	
991	K33676	Linkage Assembly, [4T40E] (Internal) 1995-Up	1	
999	K33679	Tube Set, [4T40E] (Oil Tubes) 1995-Up	1	


ALLOMATIC
TRANSMISSION
PARTS
Allomatic is proud to be an American brand and a preferred supplier of transmission filters, friction plates and steel plates to original equipment auto manufacturers and the aftermarket industry since 1959.
ALLOMATIC
A Raybestos, LLC Brand
609 E. Chaney St. · P.O. Box 267 · Sullivan, IN 47882 · USA
Toll Free: 1.800.568.0330 · Fax: 516.775.5543 · www.allomatic.com

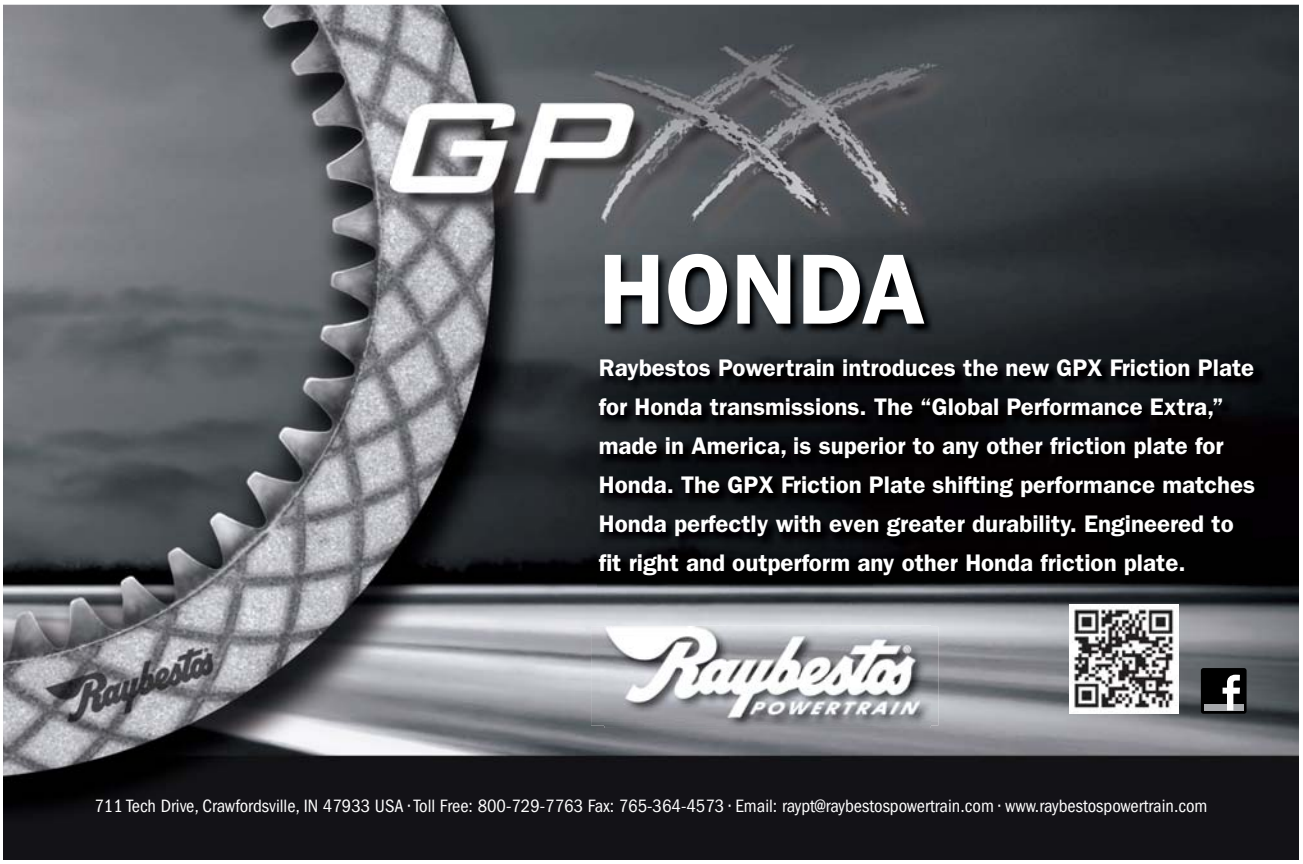
GPX
HONDA
Raybestos Powertrain introduces the new GPX Friction Plate for Honda transmissions. The "Global Performance Extra," made in America, is superior to any other friction plate for Honda. The GPX Friction Plate shifting performance matches Honda perfectly with even greater durability. Engineered to fit right and outperform any other Honda friction plate.
Raybestos
Raybestos POWERTRAIN
711 Tech Drive, Crawfordsville, IN 47933 USA · Toll Free: 800-729-7763 Fax: 765-364-4573 · Email: raypt@raybestospowertrain.com · www.raybestospowertrain.com

TH440-T4/4T60E/4T65E

FWD 4 Speed

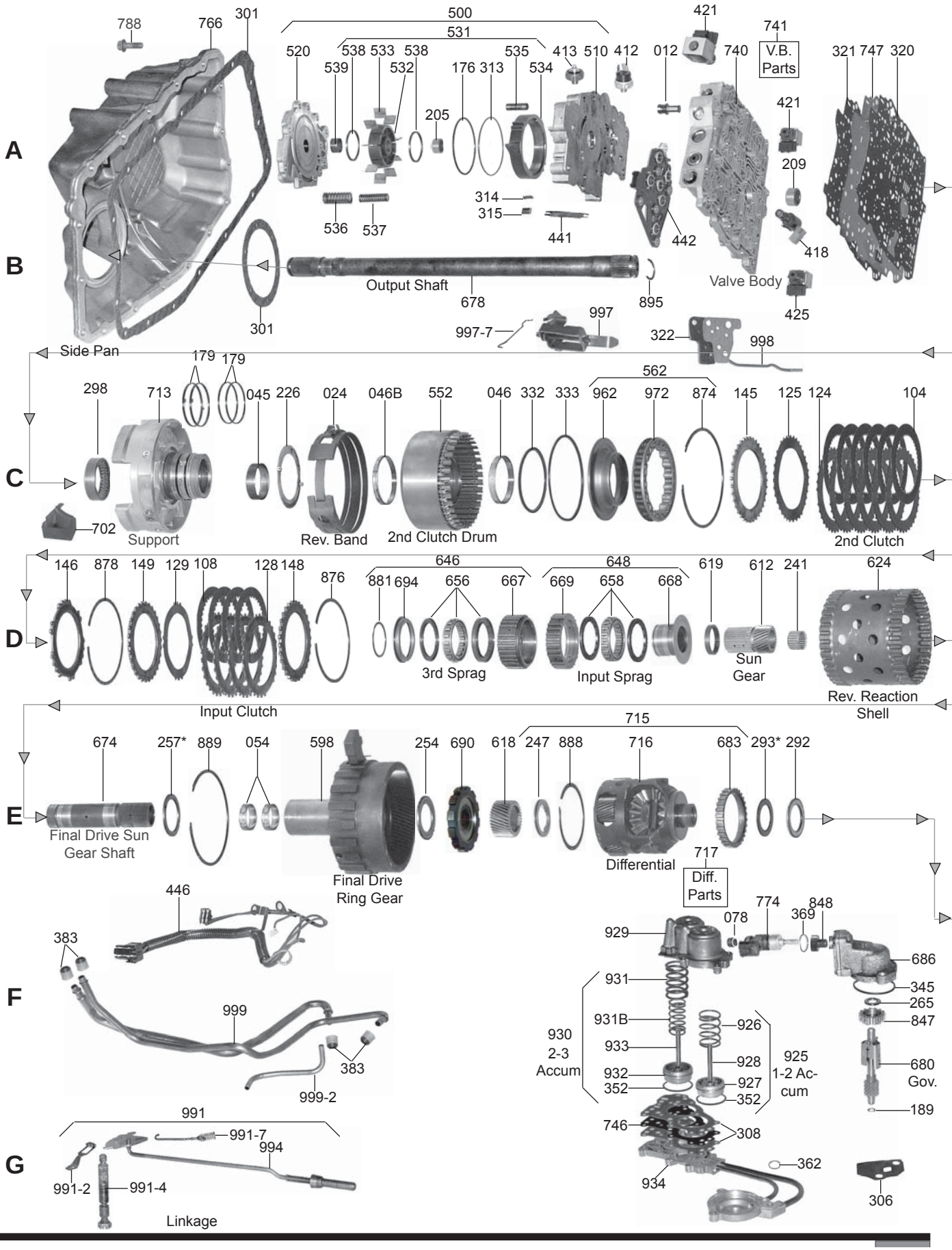

TH440-T4/4T60E/4T65E

FWD 4 Speed

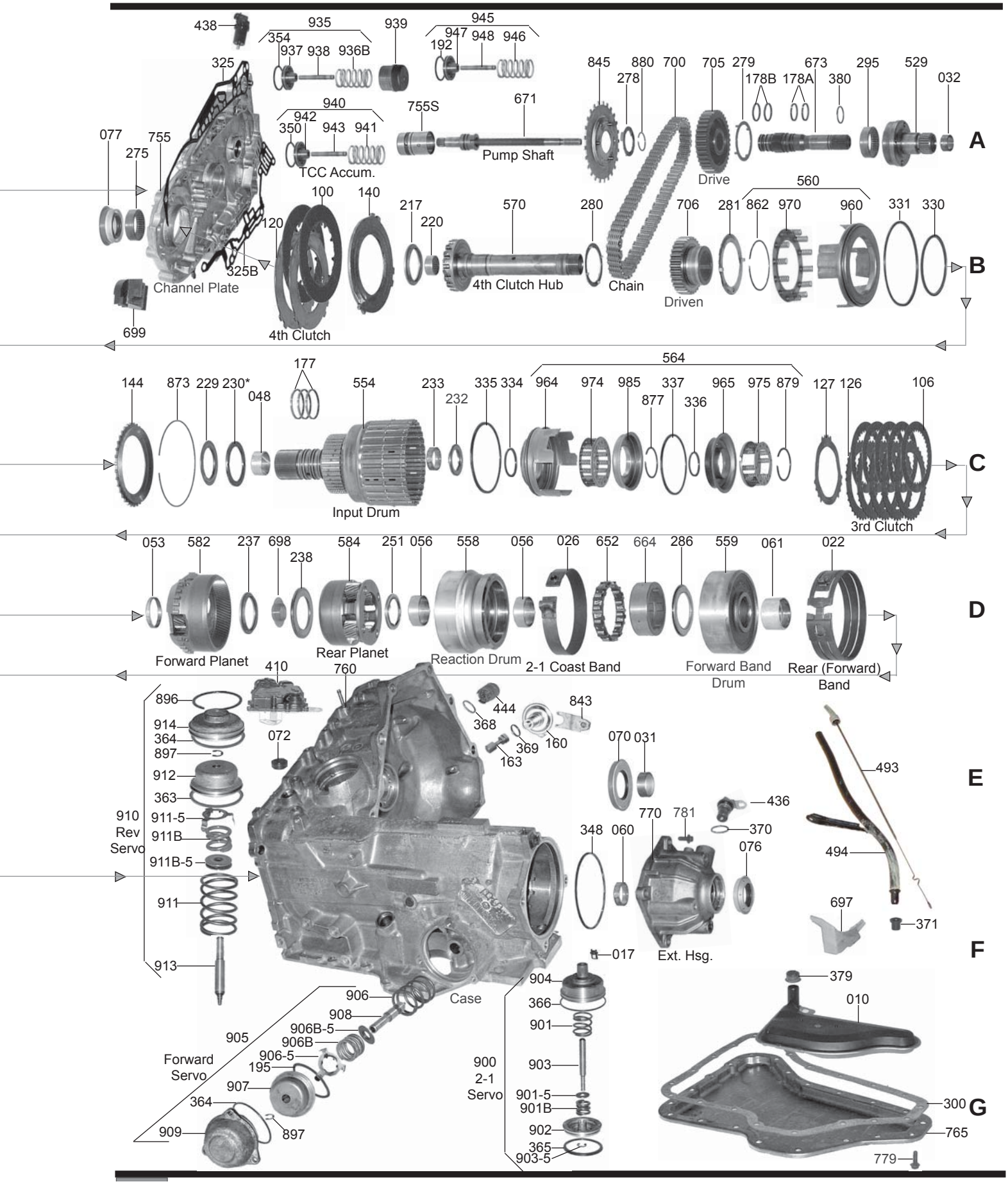

TH440-T4/4T60E/4T65E

ILL#	PART#	DESCRIPTION	QTY	REF #
		PAPER & RUBBER KIT		
	K84900-1	Paper & Rubber Kit, [TH440-T4] 1983-93 (***For Allante Use K84904 also**)	1	
	K84900E-1	Paper & Rubber Kit, [4T60E] 1991-Up	1	
		SUB KITS		
	K84904	Sub Kit, [TH440-T4] (Allante) (Valve Body Gaskets & O-Rings) 1987-92	1	
	K84900T	Sub Kit, [4T65E] (Aztek / Venture & Rendezvous / Montana) (AWD) (Transfer Case) 01-Up	1	
		OVERHAUL KIT		
	K84900	Overhaul Kit, [TH440-T4] (*For Allante Use K84904 Also) 1983-86	1	
	K84900V	Overhaul Kit, [TH440-T4 / 4T60E] (With Peek Rings & Quad Seals) (*For 2nd Clutch Hub) 1987-93	1	
	K84900E	Overhaul Kit, [4T60E] (With Peek Rings & Quad Seals) (For 2nd Clutch Hub) 1983-93 /91-Up (Without Pistons) (*For Bonded Pistons **Sell 84983E & 84760A**)	1	
	K84900Q	Overhaul Kit, [4T65E] (Volvo) (Without Pistons) 1999-Up	1	
	K84900M	Overhaul Kit, [4T65E] (Without Pistons) (*For Bonded Pistons **Sell 84928 & 84930)** (*For Aztek Venture & Rendezous / Montana (AWD) **Sell K84900T**) (Without Side Cover Gasket) 1997-06	1	
	K84900P	Overhaul Kit, [4T65E] (With Side Cover Gasket) (Without Pistons) 1997-Up	1	
	K84900R	Overhaul Kit, [4T65E] (Volvo) (With Side Cover Gasket) (Without Pistons) 1999-Up	1	
		MASTER L/STEEL KIT		
	DK8400-S	Master L/Steel Kit, [TH440-T4] 1983-86	1	
	DK8400A-S	Master L/Steel Kit, [TH440-T4 / 4T60E] (With Peek Rings & Quad Seal) (***For Allante Use K84904**) 1987-88	1	
	DK8400B-S	Master L/Steel Kit, [TH440-T4 / 4T60E] (With Peek Rings & Quad Seal) (***For Allante Use K84904**) 1989-93	1	
	DK8400E-S	Master L/Steel Kit, [4T60E] (With Peek Rings & Quad Seal) (Without Bonded Pistons) (*For Bonded Pistons **Sell 84983E & 84760A**) 1991-E94	1	
	DK8400F-S	Master L/Steel Kit, [4T60E] (With Peek Rings & Quad Seal) (Without Bonded Pistons) (*For Bonded Pistons **Sell 84983E & 84760A**) L1994-Up	1	
	DK8400M-S	Master L/Steel Kit, [4T65E] (*Except Volvo) (Without Pistons) 1997-00 (*For Pistons **Use 84928 & 84930**)	1	
	DK8400P-S	Master L/Steel Kit, [4T65E] (*Except Volvo) (Without Pistons) 2001-02 (*For Pistons **Use 84928 & 84930**) (*For Aztek / Venture & Rendezvous / Montana (AWD) **Sell K84900T**) (Transfer Case)	1	
	DK8400U-S	Master L/Steel Kit, [4T65E] (*Except Volvo) (Without Pistons) 2003-Up (*For Pistons **Use 84928 & 84930**) (*For Aztek / Venture & Rendezvous / Montana (AWD) **Sell K84900T**) (Transfer Case)	1	
	DK8400Q-S	Master L/Steels Kit, [4T65E] (Volvo) (Without Bonded Pistons) 1999-00	1	
	DK8400R-S	Master L/Steels Kit, [4T65E] (Volvo) (Without Bonded Pistons) 2001-02	1	
	DK8400V-S	Master L/Steels Kit, [4T65E] (Volvo) (Without Bonded Pistons) 2003-Up (GM Tap Shift 2005-Up)	1	
		MASTER W/STEEL KIT		
	DK8400	Master W/Steel Kit, [TH440-T4] 1983-86	1	
	DK8400A	Master W/Steel Kit, [TH440-T4 / 4T60E] (With Peek Rings & Quad Seal) 1987-88 (***For Allante Use K84904**)	1	
	DK8400B	Master W/Steel Kit, [TH440-T4 / 4T60E] (With Peek Rings & Quad Seal) 1989-93 (***For Allante Use K84904**)	1	
	DK8400E	Master W/Steel Kit, [4T60E] (With Peek Rings & Quad Seal) (Without Bonded Pistons) 1991-E94 (*For Bonded Pistons **Sell 84983E & 84760A**)	1	
	DK8400F	Master W/Steel Kit, [4T60E] (With Peek Rings & Quad Seal) (Without Bonded Pistons) L1994-Up (*For Bonded Pistons **Sell 84983E & 84760A**)	1	

	DK8400M	Master W/Steel Kit, [4T65E] (*Except Volvo) (Without Pistons) 1997-00 (***For Pistons Use 84928 & 84930**)	1	
	DK8400P	Master W/Steel Kit, [4T65E] (*Except Volvo) (Without Pistons) 2001-02 (*For Pistons **Use 84928 & 84930**) (*For Aztek / Venture & Rendezvous / Montana (AWD) **Sell K84900T**) (Transfer Case)	1	
	DK8400U	Master W/Steel Kit, [4T65E] (*Except Volvo) (Without Pistons) 2003-Up (*For Pistons **Use 84928 & 84930**) (*For Aztek / Venture & Rendezvous / Montana (AWD) **Sell K84900T**) (Transfer Case)	1	
	DK8400Q	Master W/Steels Kit, [4T65E] (Volvo) 1999-00	1	
	DK8400R	Master W/Steels Kit, [4T65E] (Volvo) 2001-02	1	
	DK8400V	Master W/Steels Kit, [4T65E] (Volvo) 2003-Up (GM Tap Shift 2005-Up)	1	
		FILTER		
010	84710A	Filter, [TH440-T4] 1983-93	1	8662853
010	84710E	Filter, [4T60E / 4T65E] 1991-Up	1	24205416
		FILTER KIT		
	FK84710A	Filter Kit, [TH440-T4] 1983-92	1	
	FK84710E	Filter Kit, [4T60E] 1991-Up	1	
		MISC. FILTERS		
012	84711	Screen, [TH440-T4 / 4T60E / 4T65E] (Oil Pump Pressure) 1983-Up	1	8656752
014	34665	Screen, [TH440-T4] (Governor Pressure) (Inside # 934) 1983-93	1	8627509
015	84715	Screen, [TH440-T4] (3rd Clutch) (Exhaust) 1983-Up	1	8658208
016	84713	Screen, [4T60E] (Shift Solenoid) 1991-Up	3-4	8651658
016	K84712	Screen, [TH440-T4] (TCC Solenoid) (In Valve Body) (With O-Ring)	1	8649474
016	84712A	Screen, [TH440-T4 / 4T60E] (TCC Solenoid) L1985-Up	1	24203263
017	84714	Screen, [4T60E / 4T65E] (2-1 Servo) (Goes in # 904 Housing) 1991-Up	1	8651754
		BANDS		
022	84700	Band, [TH440-T4] (1-2) (Rear) 1983-93	1	8675987
022	84700A	Band, [4T60E / 4T65E] (Forward) (Rear) 1991-Up	1	8651614
022	84700H	Band, [4T65E] (Forward) (Rear) (High Energy) 2001-Up	1	24213361
024	84701	Band, [TH440-T4] (Reverse) (Front) 1983-93	1	8675986
024	84701A	Band, [4T60E / 4T65E] (Reverse) (Front) 1991-Up	1	8651653
024	84701H	Band, [4T65E] (Reverse) (Front) (High Energy) 2001-Up	1	24213362
026	84702A	Band, [4T60E / 4T65E] (2-1) (Coast) (Center) 1991-Up	1	8651624
026	84702H	Band, [4T60E / 4T65E] (2-1) (Coast) (Center) (High Energy) 2000-Up	1	
		BUSHINGS		
	K84901	Bushing Kit, [TH440-T4] 1983-93	1	
	K84901E	Bushing Kit, [4T60E] 1991-95	1	
	K84901F	Bushing Kit, [4T60E / 4T65E] 1996-Up	1	
031	75005A	Bushing, [TH440-T4 / 4T60E / 4T65E] (Converter Hub) 1983-Up	1	8637905
036	65002	Bushing, [TH440-T4 / 4T60E / 4T65E] (Converter Reactor) (Front) 1983-Up	1	8628915
045	84006	Bushing, [TH440-T4 / 4T60E / 4T65E] (Driven Sprocket Support) (Input & 3rd Clutch) 83-Up	1	8656357
046	84001	Bushing, [TH440-T4 / 4T60E / 4T65E] (2nd Clutch Housing) (Rear) 1983-Up	1	8644099
046	84000	Bushing, [TH440-T4 / 4T60E / 4T65E] (2nd Clutch Housing) (Front) 1983-Up	1	8644098
048	84003	Bushing, [TH440-T4 / 4T60E] (Input Drum) (No Grooves) 1983-96	1	8649661
048	84003A	Bushing, [4T60E / 4T65E] (Input Drum) (With Grooves) 1997-Up	1	
052	84004	Bushing, [TH440-T4] (Input) (Sun Gear) 1983-Up	1	8644518
053	84005	Bushing, [TH440-T4 / 4T60E] (Front) (Planet) 1983-Up	1	8658803
054	84007	Bushing, [TH440-T4 / 4T60E] (Final Drive Internal Gear Shaft) 1983-Up	2	8649537
056	84008	Bushing, [TH440-T4] (Rear) (Sun Gear) (Front) (1-2 Band Drum) 1983-93	1	8644203

TH440-T4/4T60E/4T65E

056	84008A	Bushing, [4T60E / 4T65E] (Rear) (Sun Gear) (Front) (Reaction Drum) (*Also [4T60E] Forward Band Drum #559) 1991-Up	1	8651447
056	84008B	Bushing, [4T60E / 4T65E] (Rear) (Sun Gear) (Rear) (Forward Band Drum) 1991-Up	1	8651448
060	75019	Bushing, [TH440-T4] (Case & [4T60E / 4T65E] Extension Housing) 1983-Up	1-2	8631119
061	84009	Bushing, [4T60E] (2-1 Coast Drum) (11/16" Wide) (Center Band Drum) 1991-95 (*Can Use 84008A)	1	5606004
061	84009A	Bushing, [4T60E / 4T65E] (2-1 Coast Drum) (1-1/4" Wide) (Center Band Drum) 1996-Up	1	
755S	84099	Sleeve, [4T60 / 4T60E] (Channel Plate) (Hardened) 1983-Up	1	Sonnax
755S	84099A	Sleeve, [4T65E] (Channel Plate) (Hardened) 1997-Up	1	Sonnax
		METAL CLAD SEALS		
070	75151A	Seal, [TH440-T4 / 4T60E / 4T65E] (Front) (Red) 1983-Up	1	8664812
070	84151M	Seal, [4T65E] (Front) (Turbo Only*) 1997-Up	1	24204722
072	84511	Seal, [TH440-T4 / 4T60E / 4T65E] (Linkage Shaft) 1983-Up	1	8644709
076	75152G	Seal, [TH440-T4 / 4T60E] (Axle Stabilizer) 1983-Up	1	Teckpak
076	75152	Seal, [TH440-T4 / 4T60E / 4T65E] (Axle) (Right Side) (1-5/16"ID) 1983-Up	1	8666007
076	84154	Seal, [4T65E] (Volvo) (Axle) (Right Side) (1-5/8"ID) 1999-Up	1	9445681
077	84152	Seal, [TH440-T4 / 4T60E] (Axle) (Left Side) 1983-Up	1	8646637
077	84153	Seal, [4T65E] (Axle) (Left Side) 1997-Up	1	24204330
078	3991A	Seal, [TH440-T4] (Speed-O Shaft) (With Spring) 1983-Up	1	25519078
078	3991	Seal, [TH440-T4] (Speed-O Shaft) (Without Spring) 1983-Up	1	1240382
	84157A	Seal, [4T65E] (Input) (Transfer Unit) (Aztec & Rendezvous) 2001-Up	1	12571296
	84158A	Seal, [4T65E] (Input) (Transfer Unit) (Venture) 2002-Up	1	24204330
	84159A	Seal, [4T65E] (Output) (Transfer Unit) (Aztec, Rendezvous, & Venture) 2001-Up	1-2	12571297
	84160A	Seal, [4T65E] (Extension Housing) (Transfer Unit) (Aztec, Rendezvous, & Venture) 2001-Up	1	12571295
		FRICTION CLUTCH		
100	84108A	Friction, [TH440-T4] (4th Clutch) (.090") 1983-93	1	8658209
100	84108B	Friction, [TH440-T4 / 4T60E] (4th Clutch) (.070") (18 Teeth) 1991-Up	2	8685066
100	84108X	Friction, [TH440-T4] (4th Clutch) (.090") (Bent Tooth) 1983-93	1	
100	K84108X	Friction & Steel Kit, [TH440-T4] (4th Clutch) (.090") (Bent Tooth) 1983-93	1	62758
100	K84108Y	Friction & Steel Kit, [4T60E / 4T60E] (4th Clutch) (.070") (Bent Tooth) 1987-93	1	62758A
100	K84108Z	Friction & Steel Kit, [4T60E] (4th Clutch) (Bent Tooth) 1993-Up	1	62758B
100	84108Y	Friction, [TH440-T4 / 4T60E] (4th Clutch) (.070") (Bent Tooth) 1989-Up	2	
100	84108M	Friction, [4T65E] (4th Clutch) (.070") (32 Teeth) 1997-Up	1-2	24213074
100	84108R	Friction, [4T65E] (4th Clutch) (.060") (1-Sided Friction) (Internal Teeth) (Volvo) 1999-Up (GM Tap Shift 2005-Up)	1-2	2421850
100	84108S	Friction, [4T65E] (4th Clutch) (.060") (1-Sided Friction) (External Teeth) (Volvo) 1999-Up (GM Tap Shift 2005-Up)	1-2	2418251
104	84102	Friction, [TH440-T4 / 4T60E] (2nd Clutch) (.070") 1983-93 (*Use 84102B)	5-6	8662912
104	K84102	Friction & Steel Kit, [TH440-T4 / 4T60E] (2nd Clutch) (7- Frictions, 7-Steel, 1-Press Plate) 1983-Up	1	62756
104	84102B	Friction, [4T60E] (2nd Clutch) (Grooved) (.070") 1994-Up (*Retro Fits 1983-Up)	5-6	8685539
104	84104HP	Friction, [TH440-T4 / 4T60E] (2nd Clutch) (.060") (Hi-Performance Red) 1983-Up	5-6	62742A
104	84102A	Friction, [TH440-T4] (2nd Clutch) (.060") 1983-93	5-6	
104	84102M	Friction, [4T65E] (2nd Clutch) (Smooth) 1997-Up	5-6	24205361
106	84107	Friction, [TH440-T4] (3rd Clutch) (.089") (2-Sided Friction Facing) 1983-86	4	8662911
106	84107A	Friction, [TH440-T4] (3rd Clutch) (.083") (1-Sided Friction) (Internal Teeth) 1983-88	4	8658042
106	84107C	Friction, [TH440-T4 / 4T60E / 4T65E] (3rd Clutch) (.079") (1-Sided Friction) (Internal Teeth) 1989-Up	5	8668361
106	84107E	Friction, [4T65E] (3rd Clutch) (1-Sided, Internal Teeth) (Hi-Energy) 2001-Up (*Retros to 1998)	5	24206154

106	84107B	Friction, [TH440-T4] (3rd Clutch) (.083") (1-Sided Friction) (External Teeth) 1983-88	4	8658043
106	84107D	Friction, [TH440-T4 / 4T60E / 4T65E] (3rd Clutch) (.079") (1-Sided Friction) (External Teeth) 1989-Up	5	24206153
106	84107F	Friction, [4T65E] (3rd Clutch) (1-Sided) (External Teeth) (Hi-Energy) 2001-Up (*Retros to 1998)	5	24216288
108	84103	Friction, [TH440-T4 / 4T60E] (Input Clutch) (.090") 1983-E94	4	8662850
108	84103A	Friction, [4T60E / 4T65E] (Input Clutch) (.063") (32 Teeth) L1994-02	4	24202333
108	84103P	Friction, [4T65E] (Input Clutch) (.064") (30 Teeth) (.063") 2003-Up	4	24216502
	K84100	Friction Module, [TH440-T4] 1983-88	1	
	K84100E	Friction Module, [4T60E] 1991-94	1	
	K84100F	Friction Module, [4T60E] 1995-Up	1	
	K84100M	Friction Module, [4T65E] 1997-00	1	
	K84100P	Friction Module, [4T65E] 2001-02	1	
	K84100U	Friction Module, [4T65E] 2003-Up	1	
	K84100Q	Friction Module, [4T65E] (Volvo) 1999-00	1	
	K84100R	Friction Module, [4T65E] (Volvo) 2001-02	1	
	K84100V	Friction Module, [4T65E] (Volvo) 2003-Up	1	
		STEEL CLUTCH		
120	84105	Steel, [TH440-T4 / 4T60E] (4th Clutch) (.077") 1983-Up	2	8656767
120	84105B	Steel, [TH440-T4 / 4T60E] (4th Clutch) (.074") (F7 Allante) 1987-Up	2	8661006
120	84105M	Steel, [4T65E] (4th Clutch) (.083") 1997-Up	2	24208013
124	84104	Steel, [TH440-T4] (2nd Clutch) (.090") (Flat) 1983-86	5	8656642
124	84104A	Steel, [TH440-T4 / 4T60E] (2nd Clutch) (077") (Flat) 1987-Up	6	8662006
124	84104K	Steel, [TH440-T4] (2nd Clutch) (.090") (Kolene) (Flat) 1983-86	6	8662309
124	84104KA	Steel, [TH440-T4 /4T60E] (2nd Clutch) (.077") (Kolene) (Flat) 1987-Up	6	24203372
124	84104M	Steel, [4T65E] (2nd Clutch) (.068") (36 Teeth) 1997-Up	6	24204104
124	84104P	Steel, [4T65E] (2nd Clutch) (.090") (36 Teeth) (*Oversize to Adjust Clearance) 1997-Up	AR	
125	84106	Steel, [TH440-T4 / 4T60E] (2nd Clutch) (.044") (34 Teeth) (Waved) 1983-Up	1	8658463
125	84106M	Steel, [4T65E] (2nd Clutch) (.065") (36 Teeth) (Waved) 1997-Up	1	24202950
126	84101	Steel, [TH440-T4] (3rd Clutch) (.090") (Flat) 1983-Up	4	8656313
127	84109	Steel, [TH440-T4 / 4T60E / 4T65E] (3rd Clutch) (.030") (Waved) 1983-97	1	8656645
127	84109A	Steel, [TH440-T4 / 4T60E / 4T65E] (3rd Clutch) (.040") (Waved) 1998-Up	1	24208918
127	84109AK	Steel, [TH440-T4 / 4T60E] (3rd Clutch) (.048") (Waved) (Kolene) 1987-Up	1	
128	75104	Steel, [TH440-T4] (Input Clutch) (.078") (Flat) 1983-90 (*Also [4T60E / 4T65E] Input Clutch L1994-Up)	3-4	8631379
128	75104A	Steel, [TH440-T4 / 4T60E] (Input Clutch) (.050") (Flat) L1990-E94	4	8651446
129	75105	Steel, [TH440-T4 / 4T60E / 4T65E] (Input Clutch) (.050") (Waved) L1990-Up	1	8675257
129	75105A	Steel, [4T60E / 4T65E] (Input Clutch) (.040") (Waved) 1997-Up	1	24206560
	K84110	Steel Module, [TH440-T4] 1983-86	1	
	K84110A	Steel Module, [TH440-T4] 1987-88	1	
	K84110B	Steel Module, [4T60E] 1989-93	1	
	K84110E	Steel Module, [4T60E] L1991-94	1	
	K84110F	Steel Module, [4T60E] 1995-Up	1	
	K84110M	Steel Module, [4T65E] 1997-Up	1	
		CLUTCH PRESSURE PLATES		
140	84114	Pressure Plate, [TH440-T4] (4th Clutch) (.205") (Beveled) 1983-90	1	8649831
140	84114F	Pressure Plate, [TH440-T4 / 4T60E] (4th Clutch) (.160") 1989-Up	1	8661004

TH440-T4/4T60E/4T65E

140	84114G	Pressure Plate, [4T60E] (4th Clutch) (.135") 1993-Up	2-3	8680771
140	84114M	Pressure Plate, [4T65E] (4th Clutch) (.129") 1997-Up	1	24208014
144	84115	Pressure Plate, [TH440-T4] (2nd Clutch) (.155") (Flat) 1983-86	1	8662957
144	84115A	Pressure Plate, [TH440-T4] (2nd Clutch) (.125") (Beveled) (With Internal Snap Ring) 86-89	1	8662010
144	84115B	Pressure Plate, [TH440-T4] (2nd Clutch) (.125") (Stepped) 1989-Up	1	8683425
144	84115C	Pressure Plate, [TH440-T4 / 4T60E] (2nd Clutch) (.390") (Beveled) 1989-Up	1	8668566
144	84115M	Pressure Plate, [4T65E] (2nd Clutch) (.220") (Beveled) 1997-Up	1	24204105
145	84118	Apply Plate, [TH440-T4 / 4T60E] (2nd Clutch) (.135") (5-1/2"OD) (Flat) (Bottom) 1991-Up	1	8680367
145	84118M	Apply Plate, [4T65E] (2nd Clutch) (.152") (5-5/8"OD) (Flat) (Bottom) 1997-Up	1	24204103
146	84116	Pressure Plate, [TH440-T4] (3rd Clutch) 1983-86	1	8656315
146	84116A	Pressure Plate, [TH440-T4 / 4T60E / 4T65E] (3rd Clutch) (.157") 1987-Up	1	8658083
148	75116	Pressure Plate, [TH440-T4 / 4T60E / 4T65E] (Input Clutch) (.190") (Top) 1983-Up	1	8658146
149	84117	Apply Plate, [TH440-T4 / 4T60E / 4T65E] (Input Clutch) (.190") (Bottom) 1983-Up	1	8682801
		MODULATORS		
160	84820A	Modulator, [TH440-T4 / 4T60E / 4T65E] (Black/Red Stripe) (Single) (Diesel) (Without Plunger) 1983-7/86	1	8649099
160	84820X	Modulator, [TH440-T4 / 4T60E / 4T65E] (Red Stripe) (Dual) (Universal) 1983-Up	1	8646967
163	K84823	Adapter Kit, [TH440-T4] **(*Makes All 350/400 Modulator fit a 440-T4)** 1983-Up	1	Teckpak
163	84821	Valve, [TH440-T4] (Under Modulator) (Long) (1st Design) 1983-E86	1	8656074
160	K84820B	Aneroid OEM Modulator 1983-Up	1	8646965
163	84821A	Valve, [TH440-T4] (Under Modulator) (Short) (2nd Design) L1986-Up	1	8658375
		VALVE BODY KITS		
	K84908S	Valve Body Kit, [TH440-T4] (Shift Correction Pack) 1983-Up	1	Superior
	K84908-3	Valve Body Kit, [TH440-T4] (Tri-Pack Shift Kit) 1983-Up	1	Transgo
	K84908C	Valve Body Kit, [TH440-T4] (Reverse Cushion Kit) 1983-Up	1	Transgo
	K84908L	Lube Kit, [TH440-T4] (3rd Roller Lube & End Play Clearance Kit) 1983-Up	1	Transgo
	K84908MS	Valve Body Kit, [4T65E] (Shift Correction) 1997-Up	1	Superior
	K84908M	Valve Body Kit, [4T65E] 1997-Up	1	Transgo
	K84908JR	Valve Body Kit, [TH440-T4] (Junior Shift Kit) 1983-Up	1	Transgo
	K84908EJR	Valve Body Kit, [4T60E] (Junior Shift Kit) 1991-Up	1	Transgo
		OIL SEALING RINGS		
	K84903	Ring Kit, [TH440-T4] (Without Vespel Rings & Quad Seals) 1983-Up	1	
	K84903AT	Ring Kit, [4T60E] (With Vespel Rings & Quad Seals) 1991-Up	1	
	K84903V	Ring Kit, [4T60E / 4T65E] (*2nd Clutch Hub Only) 1987-99	1	
	K84903M	Ring Kit, [4T65E] L1997-E98	1	
	K84903N	Ring Kit, [4T65E] L1998-Up	1	
179	K84903Q	Ring Kit, [TH440-T4 / 4T60E / 4T65E] (2nd Clutch) (Contains: 2- 84300A & 2- 84300V) 1987-E98	1	
176	84311	Ring, [TH440-T4 / 4T60E / 4T65E] (Pump Slide) (.080") (Metal) 1983-Up	1	8644922
176	84311A	Ring, [TH440-T4 / 4T60E / 4T65E] (Pump Slide) (.077") (Metal) 1983-Up	1	
176	84311B	Ring, [TH440-T4 / 4T60E / 4T65E] (Pump Slide) (.074") (Metal) 1983-Up	1	
176	84311C	Ring, [TH440-T4 / 4T60E / 4T65E] (Pump Slide) (.072") (Metal) 1983-Up	1	
176	84311D	Ring, [TH440-T4 / 4T60E / 4T65E] (Pump Slide) (.069") (Metal) 1983-Up	1	
177	84307	Ring, [TH440-T4 / 4T60E / 4T65E] (Input Shaft) (Teflon) 1983-Up	3	8656342
178A	75301C	Ring, [TH440-T4 / 4T60E / 4T65E] (Turbine Shaft to Support) (Front) (Solid) (Teflon) 83-Up	1	8637170
178B	75301D	Ring, [TH440-T4 / 4T60E / 4T65E] (Turbine Shaft to Sleeve) (Rear) (Solid) (Teflon) 1983-Up	2	8643058
179	84300	Ring, [TH440-T4] (2nd Clutch) (Metal) 1983-86	2	8658098

179	84300A	Ring, [TH440-T4 / 4T60E / 4T65E] (2nd Clutch) (Rubber Expander) 1987-E98	2	8662329
179	84300V	Ring, [TH440-T4 / 4T60E / 4T65E] (2nd Clutch) (.125") (Vespel) (Teflon) 1987-E98	2	8662330
179	84300W	Ring, [4T65E] (2nd Clutch) (.100") (Vespel) (Teflon) **(*Does Not Use Rubber Expanders)** L1998-Up	2	24209498
189	65309J	Ring, [TH440-T4 / 4T60E] (Governor Shaft) (Teflon) 1983-Up	1	8632588
195	84549	Ring, [TH440-T4 / 4T60E] (Input Clutch Accumulator) 1983-Up	1	8644398
	84303T	Ring, [TH440-T4 / 4T60E] (1-2 Reverse Servo) (Teflon) 1983-Up	1	8658160
538	84333	Ring, [TH440-T4 / 4T60E / 4T65E] (Pump Vane) 1983-Up	2	8644333
		WASHERS & BEARINGS		
	K84907	Washer Kit, [TH440-T4 / 4T60E] (6-Washers, No Selectives) 1983-Up	1	
	K84907P	Washer Kit, [TH440-T4 / 4T60E] (*Plastic Washers Only) 1983-Up	1	
	K84907M	Washer Kit, [4T65E] (5-Washers, No Selectives) 1997-00	1	
	K84907N	Washer Kit, [4T65E] (6-Washers, No Selectives) 2001-Up	1	
	K84906	Bearing Kit, [TH440-T4 / 4T60E] 1983-Up	1	
	K84906M	Bearing Kit, [4T65E] 1997-Up	1	
	K75906S	Repair Kit, [TH440-T4 / 4T60E / 4T65E] (Final Drive Planet) (16-Steel Washers) 1983-Up	1	8665958
	K75906A	Repair Kit, [TH440-T4 / 4T60E] (Final Drive Planet) (8-Steel & 8-Brass Washers) 1983-90	1	K75906A
209	84957	Bearing, [TH440-T4 / 4T60E] (Pump Shaft to Valve Body) (With Sleeve) 1983-Up	1	8644516
217	84408	Bearing, [TH440-T4 / 4T60E] (4th Clutch Hub to Channel Plate) 1983-Up	1	8656393
217	84421	Washer, [4T65E] (4th Clutch Hub to Channel Plate) (3-Tab) 1997-Up	1	24207063
220	84450	Bearing, [TH440-T4 / 4T60E] (4th Clutch Hub) 1983-Up	1	Sonnax
226	84402	Washer, [TH440-T4 / 4T60E] (Driven Sprocket Support to 2nd Clutch Drum) 1983-Up	1	8644069
226	84402M	Washer, [4T65E] (Driven Sprocket Support to 2nd Clutch Drum) (2-Tab) 1997-Up	1	24204434
229	84406	Bearing, [TH440-T4 / 4T60E / 4T65E] (2nd Clutch Drum to Input Drum) (3"OD) 1983-Up	1	24203905
422	84733-10	Shim Kit, [TH440-T4 / 4T60E] (Input) (.010") (10 Per Kit) 1983-Up	1	Sonnax
422	84733-20	Shim Kit, [TH440-T4 / 4T60E] (Input) (.020") (10 Per Kit) 1983-Up	1	Sonnax
230	84423	Washer, [TH440-T4 / 4T60E / 4T65E] (2nd Clutch) (3.033"OD) (2.90mm - 3.00mm) (Orange /Green) 1983-Up	1	24204842
230	84424	Washer, [TH440-T4 / 4T60E / 4T65E] (2nd Clutch) (3.033"OD) (3.05mm - 3.15mm) (Orange /Black) 1983-Up	1	24204843
230	84425	Washer, [TH440-T4 / 4T60E / 4T65E] (2nd Clutch) (3.033"OD) (3.20mm - 3.30mm) (Orange) 1983-Up	1	24204844
230	84426	Washer, [TH440-T4 / 4T60E / 4T65E] (2nd Clutch) (3.033"OD) (3.35mm - 3.45mm) (White) 1983-Up	1	24204845
230	84427	Washer, [TH440-T4 / 4T60E / 4T65E] (2nd Clutch) (3.033"OD) (3.50mm - 3.60mm) (Blue) 1983-Up	1	24204846
230	84428	Washer, [TH440-T4 / 4T60E / 4T65E] (2nd Clutch) (3.033"OD) (3.65mm - 3.75mm) (Pink) 1983-Up	1	24204847
230	84429	Washer, [TH440-T4 / 4T60E / 4T65E] (2nd Clutch) (3.033"OD) (3.80mm - 3.90mm) (Brown) 1983-Up	1	24204848
230	84430	Washer, [TH440-T4 / 4T60E / 4T65E] (2nd Clutch) (3.033"OD) (3.95mm - 4.05mm) (Green) 1983-Up	1	24204849
230	84431	Washer, [TH440-T4 / 4T60E / 4T65E] (2nd Clutch) (3.033"OD) (4.10mm - 4.20mm) (Black) 1983-Up	1	24204850
230	84432	Washer, [TH440-T4 / 4T60E / 4T65E] (2nd Clutch) (3.033"OD) (4.25mm - 4.35mm) (Purple) 1983-Up	1	24204851
230	84433	Washer, [TH440-T4 / 4T60E / 4T65E] (2nd Clutch) (3.033"OD) (4.40mm - 4.50mm) (Purple / White) 1983-Up	1	24204852
230	84434	Washer, [TH440-T4 / 4T60E / 4T65E] (2nd Clutch) (3.033"OD) (4.55mm - 4.65mm) (Purple / Blue) 1983-Up	1	8658174
230	84435	Washer, [TH440-T4 / 4T60E / 4T65E] (2nd Clutch) (3.033"OD) (4.70mm - 4.80mm) (Purple / Pink) 1983-Up	1	8658175

TH440-T4/4T60E/4T65E

230	84436	Washer, [TH440-T4 / 4T60E / 4T65E] (2nd Clutch) (3.033"OD) (4.85mm - 4.95mm) (Purple / Brown) 1983-Up	1	8658176
230	84437	Washer, [TH440-T4 / 4T60E / 4T65E] (2nd Clutch) (3.033"OD) (5.00mm - 5.10mm) (Purple / Green) 1983-Up	1	8658177
232	84473	Washer, [TH440-T4] (Input Drum) (Rear) (4-Tab) 1983-88 (*Use Bearing 84409) 1989-Up	1	8662370
232	84409	Bearing, [TH440-T4 / 4T60E / 4T65E] (Input Drum) (Rear) 1989-Up	1	8668422
237	84405	Bearing, [TH440-T4 / 4T60E] (Inside Front Planet) 1983-Up	1	
238	84404	Bearing, [TH440-T4 / 4T60E / 4T65E] (Front Planet to Rear Planet) 1983-Up	1	8646504
241	84076	Bearing, [TH440-T4] (Sun Gear) (Split, Inner) (1-3/4" Long) 1983-90	1	8649505
241	84076A	Bearing, [TH440-T4 / 4T60E] (Sun Gear) (Split, Inner) (3/4" Long) 1991-6/93 (*Fits Some 4th Clutch Hub 1996-Up)	1	8675032
247	84454A	Bearing, [TH440-T4 / 4T60E / 4T65E] (Differential to Sun Gear) (2.125"OD) 1983-Up	1	8646254
247	65409	Bearing, [TH440-T4 / 4T60E / 4T65E] (Differential to Sun Gear) (2.000"OD) 1983-Up	1	8628962
247	84454M	Bearing, [4T60E / 4T65E] (Differential to Sun Gear) (2.350"OD) 1996-Up	1	24202396
251	84403	Bearing, [TH440-T4 / 4T60E / 4T65E] (Rear Planet to Sun Gear Drum) 1983-Up	1	8649353
254	84440	Bearing, [TH440-T4 / 4T60E] (Park Gear to Ring Gear) 1983-95	1	8644240
254	84440A	Bearing, [4T60E / 4T65E] (Park Gear to Ring Gear) (2.745"OD) 1997-Up	1	24202794
257	84407	Bearing, [TH440-T4 / 4T60E] (Reaction Drum to Internal Ring Gear) 1983-Up	1	8644206
257	84407A	Race, [4T60E / 4T65E] (Reaction Drum to Internal Ring Gear) (.140") 1993-Up	1	24200584
265	75435B	Bearing, [TH440-T4] (Governor to Cover) 1980-Up	1	8635490
271	75019A	Caged Needle Bearing, [4T60E / 4T65E] (Extension Housing) (1.855"OD) (.470" Wide) 1996-Up (Cast # HK4012)	1	
271	75019B	Caged Needle Bearing, [4T60E / 4T65E] (Extension Housing) (2-1/2"ID) (Turbo) 1996-Up	1	
275	75125LRB	Axle Stabilizer, [TH440-T4 / 4T60E] (Passenger Side) (With Bearing & Seal) 1983-Up	1	Teckpak
275	84125LB	Axle Stabilizer, [TH440-T4 / 4T60E] (Driver Side) (With Bearing & Seal) 1983-Up	1	Teckpak
275	84077	Caged Needle Bearing, [4T60E / 4T65E] (Channel Plate to Axle) 1996-Up (1.63"OD) (.430" Wide) (Cast # Torrington DC-66433)	1	24203440
278	84413	Washer, [TH440-T4 / 4T60E] (Drive Sprocket to Channel Plate) (.068") (3-Tab) 1983-Up	1	8649260
278	84413M	Washer, [4T65E] (Drive Sprocket to Channel Plate) (.048") (3-Tab) 1997-Up	1	24204328
279	75412	Washer, [TH440-T4 / 4T60E] (Drive Sprocket to Support) (4-Tab) 1983-Up	1	8652841
279	84412M	Washer, [4T65E] (Drive Sprocket to Support) (3-Tab) 1997-00	1	24205121
279	84412P	Washer, [4T65E] (Drive Sprocket to Support) (3-Tab) (3-Tabs are Round and Split to Lock on the Sprocket) 2001-Up	1	24216480
280	84414	Washer, [TH440-T4 / 4T60E] (4th Clutch Hub to Driven Support) (2.835"OD) 1983-Up	1	8644664
280	84414M	Washer, [4T65E] (4th Clutch Hub to Driven Support) (2.465"OD) (4-Tab) 1997-Up	1	24204839
281	84411	Washer, [TH440-T4 / 4T60E] (Driven Sprocket to Support) (4-Tab) 1983-Up	1	8644684
281	84411M	Washer, [4T65E] (Driven Sprocket to Support) (3-Tab) 1997-Up	1	24204840
285	84489	Wear Plate, [TH440-T4 / 4T60E] (Input Sprag) 1983-Up	2	8644016
286	65408A	Bearing, [4T60E] (1-2 Inner Race to Forward Band Drum) (2.338"ID, 3.220"OD) 1991-Up	1	8648389
286	84441A	Bearing, [4T65E] (1-2 Inner Race to Forward Band Drum) (2.296"ID, 3.475"OD) 1997-Up	1	7471026
292	75476	Bearing, [TH440-T4 / 4T60E / 4T65E] (Differential to Case) (1.443"ID, 2.250"OD) 1983-Up	1	8631362
292	84407	Bearing, [4T60E / 4T65E] (Differential to Case) (1.918"ID, 2.590"OD) 1997-Up	1	8644206
293	75417	Spacer, [TH440-T4 / 4T60E / 4T65E] (Differential to Case) (1.45mm) (#0) 1983-Up	1	8631420
293	75410-10	Shim Set, [TH440-T4 / 4T60E / 4T65E] (Differential to Case) (10 Per Set) 1983-Up	1	Sonnax
293	75417J	Spacer, [TH440-T4 / 4T60E / 4T65E] (Differential to Case) (1.55mm) (#1) 1983-Up	1	8631421
293	75417A	Spacer, [TH440-T4 / 4T60E / 4T65E] (Differential to Case) (1.65mm) (#2) 1983-Up	1	8631422
293	75417B	Spacer, [TH440-T4 / 4T60E / 4T65E] (Differential to Case) (1.75mm) (#3) 1983-Up	1	8631423
293	75417C	Spacer, [TH440-T4 / 4T60E / 4T65E] (Differential to Case) (1.85mm) (#4) 1983-Up	1	8631424
293	75417D	Spacer, [TH440-T4 /4T60E / 4T65E] (Differential to Case) (1.95mm) (#5) 1983-Up	1	8631425
293	75417E	Spacer, [TH440-T4 / 4T60E / 4T65E] (Differential to Case) (2.05mm) (#6) 1983-Up	1	8631426

293	75417F	Spacer, [TH440-T4 / 4T60E / 4T65E] (Differential to Case) (2.15mm) (#7) 1983-Up	1	8631427
293	75417G	Spacer, [TH440-T4 / 4T60E / 4T65E] (Differential to Case) (2.25mm) (#8) 1983-Up	1	8631428
293	75417H	Spacer, [TH440-T4 / 4T60E / 4T65E] (Differential to Case) (2.35mm) (#9) 1983-Up	1	8631429
295	75086	Needle Bearing, [TH440-T4 / 4T60E / 4T65E] (Converter Reactor) 1983-Up (Drive Sprocket Support)	1	24214158
298	84075	Needle Bearing, [TH440-T4 / 4T60E / 4T65E] (Driven Sprocket Support) (Drawn Cup Type) 1983-Up	1	8644054
	BS6015	Qwik Shim, [TH440-T4 / 4T60E] (Rear Planet Bottom Replacement Shim) (.015") 1983-Up	1	BS6015
	BS6030	Qwik Shim, [TH440-T4 / 4T60E] (Rear Planet Bottom Replacement Shim) (.030") 1983-Up	1	BS6030
	TS6015	Qwik Shim, [TH440-T4 / 4T60E] (Rear Planet Top Replacement Shim) (.015") 1983-Up	1	TS6015
	TS6030	Qwik Shim, [TH440-T4 / 4T60E] (Rear Planet Top Replacement Shim) (.030") 1983-Up	1	TS6030
	TS7015	Qwik Shim, [TH440-T4 / 4T60E] (Final Drive Planet Replacement Shim) (.015") 1983-Up	1	TS7015
	TS7030	Qwik Shim, [TH440-T4 / 4T60E] (Final Drive Planet Replacement Shim) (.030") 1983-Up	1	TS7030
		GASKETS & RUBBER COMPONENTS		
300	84500	Gasket, [TH440-T4] (Bottom Pan) 1983-Up	1	8656396
300	84500H	Gasket, [4T60E] (Bottom Pan) 1991-Up	1	8676250
300	84500E	Gasket, [4T60E / 4T65E] (Bottom Pan) (Bonded) (With 8mm Bolt Holes) 1991-Early 98	1	24204624
300	84500G	Gasket, [4T60E / 4T65E] (Bottom Pan) (Bonded) (With 6mm Bolt Holes) Late 1998-Up	1	24206182
301	84501	Gasket, [TH440-T4 / 4T60E] (Side Pan) (Outer) 1983-93	1	8656397
301	84503	Gasket, [4T60E] (Side Pan) (Outer) (Bonded) 1994-Up	1	8683803
301	84503A	Gasket, [4T65E] (Side Pan) (Outer) (Bonded) 1997-Up	1	24206959
301	84502	Gasket, [TH440-T4 / 4T60E] (Side Pan) (Inner) 1983-93	1	8656398
301	84504	Lathe Cut Seal, [4T60E] (Side Pan) (Inner) 1994-Up	1	24200061
301	84504B	Lathe Cut Seal, [4T65E] (Side Pan) (Inner) 1997-Up	1	24205119
306	84533	Gasket, [TH440-T4] (Governor Control Body) 1983-Up	1	8656385
308	84532	Gasket, [TH440-T4] (Accumulator Cover) 1983-Up	2	8656073
308	84532E	Gasket, [4T60E] (Accumulator Cover) 1991-93	2	8651536
308	84532F	Gasket, [4T60E] (Accumulator Cover) (With Spacer Plate) 1991-Up	1	8682085
308	84528	Gasket, [4T65E] (Accumulator Cover) (With Spacer Plate) 1997-Up	1	24205621
313	84538	O-Ring, [TH440-T4 / 4T60E / 4T65E] (Pump Slide) 1983-Up	1	8656760
314	65170	Seal, [TH440-T4 / 4T60E / 4T65E] (Pump Slide) (Rubber) 1983-Up	1	8631283
315	65180	Seal, [TH440-T4 / 4T60E / 4T65E] (Pump Slide) (Teflon) 1983-Up	1	8631877
320	84525	Gasket, [TH440-T4] (Valve Body Spacer Plate to Channel Plate) E1985 (Ink # 713)	1	8656713
320	84525A	Gasket, [TH440-T4] (Valve Body Spacer Plate to Channel Plate) L1985-Up (Ink # 813)	1	8656813
320	84525E	Gasket, [4T60E] (Valve Body Spacer Plate to Channel Plate) 1991-92 (Ink # 8678761)	1	8678762
320	84525EA	Gasket, [4T60E] (Valve Body Spacer Plate to Channel Plate) 1993-Up (Ink # 8682220)	1	8682280
320	84525C	Gasket, [4T60E] (Valve Body Spacer Plate to Channel Plate) 1987-88 (Allante F7)	1	8661069
320	84525G	Gasket, [4T65E] (Valve Body Spacer Plate to Channel Plate) 1997-Up (*Except Volvo)	1	24204500
320	84525H	Gasket, [4T65E] (Volvo) (Valve Body Plate to Channel Plate) 1999-Up (Allante)	1	24212825
320	84525B	Gasket, [TH440-T4] (Valve Body Spacer Plate to Channel Plate) 1989-Up	1	8668401
321	84526	Gasket, [TH440-T4] (Valve Body to Spacer Plate) E1985 (Ink # 712)	1	8656712
321	84526A	Gasket, [TH440-T4] (Valve Body to Spacer Plate) L1985-Up (Ink # 848)	1	8662848
321	84526E	Gasket, [4T60E] (Valve Body to Spacer Plate) 1991-92 (Ink # 8678762)	1	8678762
321	84526EA	Gasket, [4T60E] (Valve Body to Spacer Plate) 1993-Up (Ink # 8683281)	1	8682281
321	84526C	Gasket, [4T60E] (Valve Body to Spacer Plate) 1987-88 (Allante F7)	1	8661072
321	84526G	Gasket, [4T65E] (Valve Body to Spacer Plate) 1997-Up (*Except Volvo)	1	24206578
321	84526H	Gasket, [4T65E] (Volvo) (Valve Body to Spacer Plate) 1999-Up	1	24212828
321	84526F	Gasket, [TH440-T4] (Valve Body to Spacer Plate) (Allante) 1989-Up	1	8668400

TH440-T4/4T60E/4T65E

322	84131A	Gasket, [TH440-T4] (Manuever Pipe to Valve Body) (1st Design) 1983-E85	1	8656083
322	84131B	Gasket, [TH440-T4] (Manuever Pipe to Valve Body) (2nd Design) L1985-Up	1	8662841
325B	84530	Gasket, [TH440-T4 / 4T60E] (Lower Channel Plate) 1983-93	1	8649830
325B	84530E	Gasket, [4T60E] (Lower Channel Plate) 1991-Up	1	8651615
325B	84530G	Gasket, [4T65E] (Lower Channel Plate) 1997-Up (Rubber Coated Metal)	1	24204504
325	84596	Gasket, [TH440-T4 / 4T60E] (Upper Channel Plate) 1983-E85	1	8649196
325	84596E	Gasket, [TH440-T4 / 4T60E] (Upper Channel Plate) (One Piece Design) L1985-Up	1	8668064
325	84596G	Gasket, [4T65E] (Upper Channel Plate & Modulator) 1997-Up (4th Design) (*Retro Fits All 4T65E) (Rubber Coated Metal)	1	24204503
327	84524	Gasket, [TH440-T4] (Modulator Port) 1983-93	1	8656022
330	84566	Lip Seal, [TH440-T4 / 4T60E / 4T65E] (4th Clutch Piston) (Inner) 1983-Up	1	8644066
331	84561	Lip Seal, [TH440-T4 / 4T60E / 4T65E] (4th Clutch Piston) (Outer) 1983-Up	1	8644061
331	84513	Lip Seal, [TH440-T4 / 4T60E] (4th Clutch Piston) (Outer) (Allante) 1989-Up	1	8661013
332	84574	Lip Seal, [TH440-T4] (2nd Clutch Piston) (Inner) 1983-Up	1	8668074
333	84542	Lip Seal, [TH440-T4] (2nd Clutch Piston) (Outer) 1983-Up	1	8656742
334	84551	Lip Seal, [440-T4 / 4T60E / 4T65E] (Input Clutch Piston) (Inner) (Short Lip) 1983-Up	1	8649836
334	84551A	Lip Seal, [TH440-T4 / 4T60E / 4T65E] (Input Clutch Piston) (Inner) (Long Lip) 1983-Up	1	8651443
335	84557	Lip Seal, [TH440-T4 / 4T60E / 4T65E] (Input Clutch Piston) (Outer) 1983-Up	1	8649837
336	84573	Lip Seal, [TH440-T4 / 4T60E / 4T65E] (3rd Clutch Piston) (Inner) 4/1983-Up	1	8675318
337	84556	Lip Seal, [TH440-T4 /4 T60E] (3rd Clutch Piston) (Outer) 1983-Up	1	8644156
345	65177	Lathe Cut Seal, [TH440-T4] (Governor Cover) 1983-93	1	8660545
348	13271E	Lathe Cut Seal, [4T60E / 4T65E] (Extension Housing) 1991-Up	1	8651419
350	84546	Lathe Cut Seal, [TH440-T4 / 4T60E / 4T65E] (Converter Clutch Accumulator Piston) 83-85	1	8649429
350	84536	Lathe Cut Seal, [TH440-T4 / 4T60E / 4T65E] (Converter Clutch Accumulator Piston) 85-Up	1	8658086
351	84549	Lathe Cut Seal, [TH440-T4] (Input Clutch Accumulator Piston) 1983-93	1	
352	65128	Lathe Cut Seal, [TH440-T4 / 4T60E] (1-2 & 2-3 Accumulator Piston) 1983-Up	2	8635568
352	65128	Lathe Cut Seal, [4T65E] (1-2 & 2-3 Accumulator Piston) 1997-Up	2	8678473
353	84583	O-Ring, [TH440-T4 / 4T60E / 4T65E] (3rd Clutch Piston Housing) (Inner) (O-Ring In Input Drum & Seals #985)	1	
354	84517	O-Ring, [TH440-T4 / 4T60E / 4T65E] (3-4 Accumulator) 1983-Up	1	8651467
366	84582	Lathe Cut Seal, [4T60E] 1991-Up, [4T65E] L1997-Up (2-1 Servo Cover Feed to Case)	1	8651541
363	84562	Lip Seal, [TH440-T4 / 4T60E / 4T65E] (Reverse Servo Piston) (Short Lip) 1983-Up (*Also Fits Forward Servo Piston)	1	8658162
364	84539	O-Ring, [TH440-T4] (1-2 & Reverse Servo Cover) 1983-91 (*Also [4T60E] Reverse Servo Cover) 1991-Up	2	8658111
364	84510	O-Ring, [4T60E] (1-2 Servo Cover to Case) 1991-Up	1	8651567
364	84581	O-Ring, [4T65E] (Reverse Band Servo Cover) 1997-04	1	24203073
364	84510F	Lathe Cut Seal, [4T65E] (Forward Servo Cover) 1997-Up	1	24204374
365	84580A	Lathe Cut Seal, [4T60E] (2-1 Servo Piston) 1991-Up	1	
365	84580	Lip Seal, [4T65E] (2-1 Servo Piston) 1997-Up	1	8651549
362	84531	O-Ring, [4T60E / 4T65E] (2-1 Servo Piston Housing) 1991-Up	1	24204386
368	3410	O-Ring, [TH440-T4 / 4T60E] (Case Connector) 1983-Up (*Also Fits [TH440-T4] Modulator)	1-2	10054241
369	3718	O-Ring, [TH440-T4] (Speed-O Driven Gear Sleeve) 1983-Up	1	8622076
369	3410	O-Ring, [TH440-T4] (Modulator) 1983-Up	1	10054241
370	13583A	O-Ring, [4T60E / 4T65E] (Speed Sensor) 1991-Up	1	
371	3292	Boot, [TH440-T4 / 4T60E / 4T65E] (Filler Tube) 1983-Up	1	1259475
372	84584	O-Ring, [4T60E /4T65E] (Actuator Guide) 1997-Up	1	8675086
373	13582	Boot, [TH440-T4] (Detent Cable) 1983-Up	1	25518260
376	84509	O-Ring, [TH440-T4 / 4T60E] (Converter Clutch Solenoid Screen) 1983-Up	1	8658109
379	84548	Seal, [TH440-T4 / 4T60E / 4T65E] (Filter Seal) 1983-Up	1	8656613

380	13503A	O-Ring, [TH440-T4 / 4T60E / 4T65E] (Turbine Shaft) (Goes Behind Splines) 1983-Up	1	8662686
383	84527	Cup Seal, [TH440-T4] (Servo Pipe to Valve Body) 1983-93	2	8656567
383	84540	Cup Seal, [TH440-T4] (Servo Pipe to Case) 1983-93	2	8656568
383	84565	Lathe Cut Seal, [TH440-T4] (Lube Pipe Seal) 1983-93	1	8649379
383	84391	Cup Seal, [TH440-T4] (3-2 Coast Down) (*Update) 1983-93	1	8662391
384	3665	O-Ring, [TH440-T4] (Lock-Up Solenoid) 1983-Up	1	8634188
	22599	O-Ring, [4T65E] (Cooler Line) 1999-Up	2	
		TECHNICAL MANUALS		
	TM440-T4	Tech Manual, [TH440-T4] 1983-Up	1	ATSG
	TM4T60-E	Tech Manual, [4T60E] 1991-Up	1	ATSG
	TM4T65	Tech Manual, [4T65E] 1997-Up	1	ATSG
	TM4T65EUD	Tech Manual, [4T65E] (1997 Update Hand Book)	1	ATSG
	TM440-T4UD	Tech Manual, [TH440-T4] (Hand Book) 1986-Up	1	ATSG
	TM440-T4UD2	Tech Manual, [TH440-T4] (Update) (Volume II)	1	ATSG
		ELECTRICAL COMPONENTS		
410	84991AA	Switch, [4T60E] (Neutral Safety) (With Wire Harness) (With (1) 4-Prong & (1) 7-Prong Connector) 1991-96	1	1994350
410	84991AB	Switch, [4T60E] (Neutral Safety) (With Wire Harness) 1991-96 (Cadillac, Seville)	1	
410	84991AC	Switch, [4T60E / 4T65E] (Neutral Safety) (No Wire Harness) (With (1) 4-Prong & (1) 7-Prong Connector Made on the Switch) (External) 1997-98	1	12450157
410	84991A	Switch, [4T65E] (Neutral Safety) (No Wire Harness) (6-Prong Connector) (External) (Cadillac & Oldsmobile) 1999-Up	1	24226755
410	84991AD	Switch, [4T65E] (Neutral Safety) (No Wire Harness) (7-Prong Connector Made on Switch) (External) 2003-05	1	24222729
410	84988	Switch, [4T65E] (Neutral Safety) (Internal) (Chevy) (With Rooster Comb & Manual Shaft) (6-Prong) 1999-Up	1	24236104
411	77948	Switch, [4T60E] (3rd & 4th Clutch Pressure) (1-Prong) 1991-Up	1	8642473
412	84619	Switch, [TH440-T4] (3rd Clutch Pressure) (2-Prong) 1983-Up	1	8658039
412	77948	Switch, [4T60E] (3rd & 4th Clutch Pressure) (1-Prong)	1	8642473
413	84618	Switch, [TH440-T4 / 4T60E] (2nd, 3rd & 4th Clutch Pressure) (1-Prong) (1st Design) 83-93	1	8658040
413	84618A	Switch, [TH440-T4 / 4T60E] (4th Clutch Pressure) (1-Prong) (2nd Design) 1991-Up	1	8668708
418	K84858U	Solenoid, [4T60E] (TCC, PWM) 1991-Up	1	Teckpak
418	K84858R	Solenoid, [4T60E] (TCC, PWM) 1991-Up	1	Rostra
418	84858	Solenoid, [4T60E] (TCC, PWM) 1991-Up (OEM Style)	1	8683535
	MS-4T60E	Solenoid Master Kit, [4T60E] (Contains: 3- Shift, 1- TCC, & 1- PWM Solenoid)	1	Teckpak
421	84825	Solenoid, [4T60E] (1-2 & 3-4 Shift) & (TCC) 1991-Up	3	10478108
421	84955	Solenoid, [4T65E] (1-2 & 3-4 Shift) 1997-Up	2	24219819
425	84856	Solenoid, [TH440-T4] (TCC Lock-up) (OEM Style) 1983-Up	1	8646419
425	77942	Solenoid, [4T65E] (TCC) 1997-Up	1	24227792
431	33946	Solenoid, [4T65E] (EPC) 1997-02	1	10478146
431	33946A	Solenoid, [4T65E] (EPC) 2003-Up	1	24225825
436	84986	Sensor, [4T60E / 4T65E] (Output Speed) (Short Connector) 1997-99	1	10456034
436	84986A	Sensor, [4T65E] (Volvo) (Output Speed) (2-Wire With 28-1/2" Long Wire Harness) 1999-Up	1	24210702
436	84986B	Sensor, [4T65E] (Output Speed) (With Longer Connector)	1	213-3241
	84621	Switch, [TH440-T4] (Thermister / Temp Switch) (2-Prong)	1	8649669
	84630	Switch, [TH440-T4] (Thermister) (1-Prong) (on Pump) 1985-87	1	8658389
438	84984	Sensor, [4T65E] (Input Speed) 1997-Up	1	10456509
438	84984A	Sensor, [4T65E] (Volvo) (Input Speed Sensor) 1999-Up	1	24211397
	84879	Element Plate Kit, [TH440-T4] (Thermostatic Element)	1	8646904
442	84987	Switch, [4T65E] (TFP) (Manifold Pressure Switch) (4-Wire) 1997-02	1	24223197

442	84987A	Switch, [4T65E] (TFP) (Manifold Pressure Switch) (1-Wire) 2003-Up	1	24216426
444	84983	Connector, [TH440-T4] (Case) (4-Prong) (Square) 1983-Up	1	8662395
444	84983C	Connector, [TH440-T4] (Case) (5-Prong) (Round) 1991-Up	1	8649507
444	84983A	Connector, [4T60E] (Case) (7-Prong) 1991-Up	1	24216981
445	84970AA	Wire Harness, [TH440-T4] (External) (4-Wire) 1989-Up	1	
445	84972AB	Wire Harness, [4T60E] (External) (5-Wire) 1991-93	1	
445	84972	Repair Kit, [4T60E] (External) (Wire Harness) 1991-93	1	350-0037
445	84972A	Repair Kit, [4T60E] (External) (Wire Harness) 1994-Up	1	Rostra
445	84970AB	Repair Kit, [TH440-T4] (External) (Wire Harness) (4-Prong) (Square) 1983-Up	1	
445	84972AC	Repair Kit, [4T60E] (External) (Wire Harness) (5-Prong) (Round) 1991-93	1	
446	84870AG	Wire Harness, [TH440-T4] (Internal) (4-Prong) (Square Case Connector) (With (1) 2-Prong & (2) 1-Blade Connectors)	1	
446	84970AC	Wire Harness, [TH440-T4] (Internal) (4-Prong) (Round Case Connector) (With (1) 2-Prong & (2) 1- Blade Connectors)	1	
446	84970AD	Wire Harness, [TH440-T4] (Internal) (5-Prong Case Connector) (With (1) 2-Prong & (3) 1-Blade Connectors) (15” From the 5-Prong to the 2-Prong Connector)	1	
446	84970AE	Wire Harness, [TH440-T4] (Internal) (5-Prong Case Connector) (With (1) 2-Prong & (3) 1-Blade Connectors) (28” From the 5-Prong to the 2-Prong Connector)	1	
446	84970AF	Wire Harness, [TH440-T4] (Internal) (5-Prong Case Connector) (With (1) 2-Prong & (3) 1- Prong Connectors)	1	
446	84970	Wire Harness, [4T60E] (Internal) (7-Prong Connector) (With (2) 1-Prong Connectors & (3) 2-Prong Connectors) (With PWM) 1991-93	1	350-0040
446	84972AG	Wire Harness, [4T60E] (Internal) (6-Prong Connector) 1991-93	1	12121130
446	84971	Wire Harness, [4T60E] (Internal) (7-Prong Connector) (With (4) 1-Prong Connectors & (3) 2-Prong Connectors) (Without PWM) 1991-93	1	8661085
446	84970A	Wire Harness, [4T60E] (Internal) (7-Prong Connector) (With (4) 2-Prong Connectors & Clip-on Type Temperature Sensor) 1994-Up	1	350-0036
446	84985	Wire Harness, [4T65E] (Internal) (Without Internal Mode Switch) 1997-Up	1	24241204
446	84985A	Wire Harness, [4T65E] (Internal) (With Internal Mode Switch) (4-Prong) 1999-02	1	24230349
446	84985B	Wire Harness, [4T65E] (Internal) (With Internal Mode Switch) (1-Prong) 2003-Up	1	24237264
446	K84985R	Wire Harness, [4T65E] (Internal) (Universal 14, 17 & 19 Pin Connector) 1997-Up	1	Rostra
		MISC. COMPONENTS		
	65764	Capsule W/Check Ball, [TH440-T4] (Input Drum) 1983-86	1	8633748
	84994A	Capsule W/Check Ball, [TH440-T4 / 4T60E] (Input Drum) 1987-Up	1	8662178
	84994	Capsule W/Spring & Check Valve, [TH440-T4] (Under Servo Tube) 1983-Up	1	8668287
	8644685	Alignment Pin, [TH440-T4] (Channel Plate to Case) 1983-Up	2	8644685
	8656077	Alignment Pin, [TH440-T4] (Valve Body to Channel Plate) 1983-Up	2	8656077
494	84999	Filler Tube, [TH440-T4] 1984-Up	1	
		HARD PARTS		
500	84912	Pump, [TH440-T4] (2-Pressure Switches, No 3-2 Tube Hole) 1983-87	1	8646939
500	84912B	Pump, [TH440-T4] (3-Pressure Switches, No 3-2 Tube Hole) 1983-87	1	8662322
500	84912AA	Pump, [TH440-T4] (2-Pressure Switches, No 3-2 Tube Hole) L1985-86 (With 1-Small Thermal Switch For Cadillac With Viscous Converter)	1	
500	84912A	Pump, [TH440-T4] (2-Pressure Switches, With 3-2 Tube Hole) 1987-91 (With 1-Small Thermal Switch For Cadillac With Viscous Converter)	1	8646941
500	84912C	Pump, [TH440-T4] (2-Pressure Switches, With 3-2 Tube Hole) 1987-91 (*Except Cadillac With Viscous Converter)	1	8675254
500	84912D	Pump, [TH440-T4] (3-Pressure Switches, With 3-2 Tube Hole) 1988-91	1	8675255
500	84912E	Pump, [4T60E] (No Switch, No Brass Air Bleed) (Cover Cast # 8651508) (Body # 24200370) 1991-Up	1	8651543
500	84912F	Pump, [4T60E] (No Switches, With Brass Air Bleed) 1991-Up	1	

500	84912G	Pump, [4T60E] (2-Switches, No Brass Air Bleed) 1991-Up	1	
500	84912GA	Pump, [4T60E] (2-Switches, With Brass Air Bleed) 1991-Up	1	
500	84912J	Pump, [4T60E] (No Switch, No Brass Air Bleed) (10-Bolt) (Cover Cast # 24201742) (Body #24201740) 1991-Up	1	
500	84912JA	Pump, [4T60E] (No Switch, No Brass Air Bleed) (11-Bolt) (Cover Cast # 24201742) (Body #24201740) 1991-Up	1	
500	84912M	Pump, [4T65E] (Cover Cast #24205910 or 24209404 or 24213197) (Body Cast #24206183 or 24210098) 1997-Up	1	
500	84912N	Pump, [4T65E] (Cover Cast # 24221692) 2002-Up	1	
		PUMP COMPONENTS		
314	65170	Seal, [TH440-T4 / 4T60E / 4T65E] (Pump Slide) (Rubber) 1983-Up	1	8631283
315	65180	Seal, [TH440-T4 / 4T60E / 4T65E] (Pump Slide) (Teflon) 1983-Up	1	8631877
539	84958	Sleeve, [TH440-T4 / 4T60E] (Pump Cover) 1985-Up	1	8631288
		HARD PARTS (Continued)		
520	84992	Pump Cover, [TH440-T4 / 4T60E] 1984-86	1	8649432
520	84992A	Pump Cover, [TH440-T4 / 4T60E] 1987-93	1	8662392
520	84992B	Pump Cover, [4T60E] (11-Bolt) (Cast # 8651508) 1991-Up	1	8651616
520	84992BA	Pump Cover, [4T60E] (10-Bolt) (Cast # 24201197 or 24201404) 1991-Up	1	
520	84992BB	Pump Cover, [4T60E] (11-Bolt) (Cast # 24201742) 1991-Up	1	
529	84841C	Converter Reactor, [TH440-T4 / 4T60E] 1983-Up	1	8644036
529	84841M	Converter Reactor, [4T65E] 1997-Up	1	24211875
532	84978	Rotor, [TH440-T4 / 4T60E] (Pump) (17.95mm) (9-Vane) 1983-Up (Outside Has No Bevel)	1	8656267
532	84978A	Rotor, [4T60E] (Pump) (17.99mm) (9-Vane) (Outside Beveled Front to Back) (*Retro Fits 1991-Up)	1	
532	84978M	Rotor, [4T65E] (Pump) (17.99mm) (11-Vane) (Outside Beveled Front to Back) 1997-Up	1	
533	84926	Vane, [TH440-T4] (Pump) (1 & 2) (17.95mm) 1983-Up	9	8644661
533	84926A	Vane, [4T60E / 4T65E] (Pump) (3 & 4) (17.97mm) 1991-Up	9-11	8644662
534	84979	Slide, [TH440-T4 / 4T60E / 4T65E] (Pump) (17.96mm) 1983-Up	1	8662901
534	84979A	Slide, [4T60E / 4T65E] (Pump) (17.99mm) 1991-Up	1	8662904
535	84881	Pin, [TH440-T4 / 4T60E] (Pump Slide Pivot) (Without Groove) 1983-93	1	8649477
453	84881A	Pin, [4T60E / 4T65E] (Pump Slide Pivot) (Solid) (With Groove) 1993-Up	1	Sonnax
536	84280A	Spring, [TH440-T4 / 4T60E / 4T65E] (Pump Slide) (Outer) 1983-Up	1	8646189
537	84280B	Spring, [TH440-T4 / 4T60E / 4T65E] (Pump Slide) (Inner) 1983-Up	1	8646251
538	84333	Ring, [TH440-T4 / 4T60E / 4T65E] (Pump Vane) 1983-Up	2	8644333
552	84716	Drum, [TH440-T4] (2nd Clutch) (5-Clutch) (With 2-Lube Holes in Bore) 1983-86	1	8668958
552	84716AA	Drum, [TH440-T4] (2nd Clutch) (5-Clutch) (With 6-Lube Holes in Bore) L1985-86	1	8646929
552	84717	Drum, [TH440-T4] (2nd Clutch) (6-Clutch) (With 6-Lube Holes in Bore) 1987-91	1	8661912
552	84717A	Drum, [4T60E] (2nd Clutch) (6-Clutch) (Uses a Bonded Piston) 1991-Up	1	8651919
552	84717M	Drum, [4T65E] (2nd Clutch) (6-Clutch) (No Oil Groove Between Rings) 1997-Up (*Can Use 84717P) (8-Feed Holes)	1	
552	84717P	Drum, [4T65E] (2nd Clutch) (6-Clutch) (With Deep Oil Groove Between Rings) (10-Feed Holes) 1999-Up	1	24212951
554	84733	Drum, [TH440-T4] (Input) (Washer Type) (.233" Wide Inner Lip Seal Groove) 1983-87	1	
554	84733AA	Drum, [TH440-T4] (Input) (Washer Type) (.107" Wide Inner Lip Seal Groove) 1983-87	1	
554	84733B	Drum, [TH440-T4] (Input) (Bearing Type) 1988-91	1	8662970
554	84733C	Drum, [4T60E] (Input) (Bearing Type) 1991-E93	1	8651924
554	84733D	Drum, [4T60E] (Input) (With Caged Bearing Inside) (3.690"OD) (2nd Clutch Hub) L1993-Up	1	8651937
554	84733M	Drum, [4T65E] (Input) (With Caged Bearing Inside) (3.390"OD) (2nd Clutch Hub) 1997-Up	1	
558	84949	Drum, [TH440-T4] (Reaction With Sun Gear) (2-1/8" Tall) 1983-91	1	8676144

TH440-T4/4T60E/4T65E

558	84949A	Drum, [4T60E] (Reaction With Sun Gear) (2-3/4" Tall) (With 4-Lugs For # 664) 1991-95	1	8651450
558	84949B	Drum, [4T60E / 4T65E] (Reaction With Sun Gear) (3-1/4" Tall) 1995-Up	1	24201902
559	84956	Drum, [4T60E] (Forward Band Drum) (16-Roller Type Sprag) 1991-95	1	7471030
559	84956A	Drum, [4T60E / 4T65E] (Forward Band Drum) (14-Roller Type Sprag) 1996-Up	1	7471027
560	K84988A	Piston Kit, [TH440-T4] (4th Clutch) (1st Design) 1983-85	1	
560	K84988	Piston Kit, [TH440-T4 / 4T60E] (4th Clutch) (2nd Design) 1986-Up	1	
560	K84988M	Piston Kit, [4T65E] (4th Clutch) 1997-Up	1	
562	K84929	Piston Kit, [TH440-T4] (2nd Clutch) L1985-91	1	
562	K84983E	Piston Kit, [4T60E] (2nd Clutch) (Bonded) (5-1/8" OD Piston) 1991-Up	1	
562	K84928	Piston Kit, [4T65E] (2nd Clutch) (Bonded) (5-3/8" OD Piston) 1997-Up	1	
564	K84760	Piston Kit, [TH440-T4] (3rd & Input Clutch) (Lip Seal Type) 1983-91	1	
564	K84760A	Piston Kit, [4T60E] (3rd & Input Clutch) (With Bonded 3rd Clutch Piston) (With Check Ball) 1991-Up	1	
564	K84930	Piston Kit, [4T65E] (3rd & Input Clutch) (With Bonded 3rd Clutch Piston) (No Check Ball) 1997-Up	1	
570	84860	Hub & Shaft, [TH440-T4 / 4T60E] (4th Clutch) 1983-E93	1	8685145
570	84860A	Hub & Shaft, [4T60E] (4th Clutch) L1993-95 (*Retros to 1983)	1	24201094
570	84860B	Hub & Shaft, [4T60E] (4th Clutch) (No Bearing) 1996-Up	1	24202037
570	84860C	Hub & Shaft, [4T65E] (4th Clutch) 1997-Up	1	24205603
582	84947	Planet, [TH440-T4] (Front) (.350" Wide Bushing) (Without Lube Dam) 1983-E85	1	8644940
582	84947A	Planet, [TH440-T4] (Front) (.265" Wide Bushing) (No Bevel on Ring Gear) (With Lube Dam) (High Lip) L1985-86	1	8668580
582	84947B	Planet, [4T60E] (Front) (.265" Wide Bushing) (With Lube Dam) (Short Lip) 1987-93	1	
582	K84947A	Planet Kit, [TH440-T4] (Front) (With Input Sprag) (.265" Wide Bushing) (No Bevel) 1986-91	1	
582	84947C	Planet, [4T60E] (Front) (With 24-Outer Lugs) (No Lip or Bushing) L1993-Up (*Will Retro to L1985)	1	8775372
582	84947M	Planet, [4T65E] (Front) (With 12-Outer Lugs) (No Bushing) 1997-Up	1	24204430
584	84948	Planet, [TH440-T4 / 4T65E] (Rear) (Inner Splines Beveled on One End Only) 1983-Up	1	8661084
598	84951	Ring Gear, [TH440-T4] (Final Drive) (70 Teeth) (Right Angled) 1983-89	1	8656372
598	84951A	Ring Gear, [4T60E] (Final Drive) (70 Teeth) (Right Angled) 1990-93 (Hub 3.146" Tall) (Has a Step to Center Bearing #254)	1	8651786
598	84951B	Ring Gear, [4T60E] (Final Drive) (70 Teeth) (Right Angled) 1991-95 (Hub 3.146" Tall) (No Step to Bearing #254)	1	
598	84951C	Ring Gear, [4T60E / 4T65E] (Final Drive) (78 Teeth) (Right Angled) 1996-Up	1	8685582
612	84945	Sun Gear, [TH440-T4 / 4T60E] (Input) (Front) 1983-E93	1	8668703
612	84945C	Sun Gear, [4T60E / 4T65E] (Input) (Front) (For Dual Sprag) 1993-Up	1	
618	75884	Sun Gear, [TH440-T4 / 4T60E] (Final Drive) (38 Teeth) (Right Angled) (2.660"OD) 1983-94	1	8658040
618	75884A	Sun Gear, [TH440-T4 / 4T60E] (Final Drive) (34 Teeth) (Right Angled) (2.380"OD) 1983-94	1	24209169
618	75884DA	Sun Gear, [4T60E] (Final Drive) (34 Teeth) (Left Angled) (2.170"OD) 1995-96	1	24201449
618	75884D	Sun Gear, [4T60E / 4T65E] (Final Drive) (34 Teeth) (Right Angled) (2.170"OD) 1997-Up	1	
618	75884B	Sun Gear, [TH440-T4 / 4T60E] (Final Drive) (30 Teeth) (Right Angled) (2.130"OD) 1983-94	1	8644114
618	75884EA	Sun Gear, [4T60E] (Final Drive) (38 Teeth) (Left Angled) (2.410"OD) 1995-96	1	
618	75884E	Sun Gear, [4T60E / 4T65E] (Final Drive) (38 Teeth) (Right Angled) (2.410"OD) 1997-Up	1	
618	75884CA	Sun Gear, [4T60E] (Final Drive) (42 Teeth) (Left Angled) (2.615"OD) 1995-96	1	
618	75884C	Sun Gear, [4T60E / 4T65E] (Final Drive) (42 Teeth) (Right Angled) (2.615"OD) 1997-Up	1	
619	84944	Spacer, [TH440-T4] (Input Sun Gear) (.497") 1983-84	1	8649545
619	84944A	Spacer, [TH440-T4 / 4T60E] (Input Sun Gear) (.350") 1985-E93	1	8658797
619	84944B	Spacer, [4T60E / 4T65E] (Input Sun Gear) (.339") L1993-Up	1	8682442
624	84946A	Shell, [TH440-T4 / 4T60E] (Reverse Reaction) ("Stove Pipe") (OE Hardened) 1983-97	1	24221583

624	84946M	Shell, [4T65E] (Reverse Reaction) (1st Design) (Tapered Teeth to 2nd Drum) 1997-Up	1	8644946
624	84946P	Shell, [4T65E] (Reverse Reaction) (2nd Design) (Square Teeth to 2nd Drum) 1999-Up	1	24209481
		SPRAGS & ONE WAY CLUTCHES		
646	K84724	Sprag Assembly, [TH440-T4 / 4T60E] (3rd Clutch) 1984-93	1	8681406
646	K84724B	Sprag Assembly, [4T60E / 4T65E] (3rd Clutch) & (Low Input) (1-Piece) L1993-Up	1	
648	K84727	Sprag Assembly, [TH440-T4] (Low Input) 1983-E86	1	8646986
648	K84727A	Sprag Assembly, [TH440-T4 / 4T60E] (Low Input) L1886-E93	1	8646985
652	35727	Sprag, [4T60E] (1-2 Roller) (16-Rollers) 1991-95	1	6261305
652	84730	Sprag, [4T60E / 4T65E] (1-2 Roller) (14-Roller) (Plastic Cage) 1996-Up	1	7472007
652	K84956-SP	Spring Set, [4T60E] (1-2 Roller Sprag) (Heavy Duty) (16-Per Set) 1991-95	1	Sonnax
656	84724	Sprag, [TH440-T4 / 4T60E] (3rd Clutch) 1983-E93	1	8662876
658	84727	Sprag, [TH440-T4] (Low Input) 1983-E86	1	8658501
658	84727A	Sprag, [TH440-T4 / 4T60E] (Low Input) L1986-E93	1	8662031
656	84724B	Sprag, [4T60E] (Low Input & 3rd Clutch) L1993-95	1	8685220
656	84724C	Sprag, [4T60E / 4T65E] (Low Input & 3rd Clutch) 1996-Up	1	24204036
		HARD PARTS (Continued)		
664	84961	Inner Race, [4T60E] (1-2 Roller) 1991-95	1	7471031
	84752	Cam, [TH440-T4] (3rd Clutch Sprag) 1983-86	1	
667	84941	Outer Race, [TH440-T4] (3rd Clutch Sprag) 1983-86	1	8656714
667	84941A	Outer Race, [TH440-T4] (3rd Clutch Sprag) 1986-88	1	
667	84941B	Outer Race, [TH440-T4 / 4T60E] (3rd Clutch Sprag) (1.129") 1988-E93	1	8658795
667	84941C	Outer Race, [4T60E / 4T65E] (3rd Clutch Sprag) (1.345") L1993-Up	1	
668	84942	Inner Race, [TH440-T4 / 4T60E] (Input Sprag) 1983-E93	1	
668	84942A	Inner Race, [4T60E / 4T65E] (3rd Clutch & Input Sprag) (1-Piece) L1993-Up	1	
669	84943	Outer Race, [TH440-T4 / 4T60E] (Input Sprag) (.966") 1983-88	1	
669	84943A	Outer Race, [TH440-T4 / 4T60E] (Input Sprag) (1.016") 1988-E93	1	
669	84943B	Outer Race, [4T60E / 4T65E] (Input Sprag) (.907") L1993-Up	1	
671	84874	Pump Shaft, [TH440-T4 / 4T60E] (Oil Pump Drive) (9-3/4" Long) 1983-Up	1	8656624
671	84874M	Pump Shaft, [4T65E] (Oil Pump Drive) (10" Long) 1997-Up	1	24209284
673	84859	Turbine Shaft, [TH440-T4] 1983-91	1	8652382
673	84859A	Turbine Shaft, [4T60E] (6" Long) 1991-Up	1	24202468
673	84859M	Turbine Shaft, [4T65E] (6-1/4" Long) 1994-Up	1	24208853
674	84950	Shaft, [TH440-T4] (Final Drive Sun Gear) (4-1/2" Long) (Unbored) 1983-85	1	8649543
674	84950A	Shaft, [TH440-T4] (Final Drive Sun Gear) (4-1/2" Long) (With Recess) 1986-91	1	8661020
674	84950B	Shaft, [4T60E / 4T65E] (Final Drive Sun Gear) (6-1/4" Long) 1991-Up	1	8651453
678	84737	Output Shaft, [TH440-T4] (Bushing Type) (Short) 1983-88	1	8658408
678	84737A	Output Shaft, [TH440-T4 / 4T60E] (Bearing Type) (Long) 1988-Up	1	8668890
678	84737AA	Output Shaft, [TH440-T4 / 4T60E] (Bearing Type) (18" Long) L1985-91	1	8675990
678	84737AB	Output Shaft, [TH440-T4 / 4T60E] (Bearing Type) (19-11/16" Long) L1985-91	1	
678	84737AC	Output Shaft, [4T60E] (Bearing Type) (17-3/4" Long) 1991-E93	1	8668890
678	84737B	Output Shaft, [4T60E] (Bearing Type) (19-1/2" Long) 1991-95	1	8651716
678	84737C	Output Shaft, [4T60E] (Non-Bearing Type) (19-1/2" Long) 1991-95	1	8683560
678	84737D	Output Shaft, [4T60E / 4T65E] (With Bearing Groove) (19-1/2" Long) 1996-Up	1	24201983
678	84737M	Output Shaft, [4T65E] (Has No Bearing) (19-3/4" Long) 1997-Up (1.800" Spline Length)	1	24208923
678	84737E	Output Shaft, [4T60E / 4T65E] (19-5/8") 1996-Up (1.630" Spline) (Long Wide Band 4" From End of Shaft)	1	24202014
680	84410	Governor, [TH440-T4] (Without Plastic Speed-O Gear) 1983-Up	1	8655962
680	84410H	Governor, [TH440-T4] (With 8 Tooth Electronic Pick-Up) 1983-Up	1	8634933

TH440-T4/4T60E/4T65E

680	84410J	Governor, [TH440-T4] (With 11 Tooth Electronic Pick-Up) 1983-Up	1	8644961
680	84410K	Governor, [TH440-T4] (With 14 Tooth Electronic Pick-Up) 1983-Up	1	8644962
680	84410L	Governor, [TH440-T4] (With 15 Tooth Electronic Pick-Up) 1983-Up	1	8644963
683	75885	Gear, [TH440-T4] (Governor Drive) 1983-93	1	
683	84886B	Pick-Up, [4T60E / 4T65E] (Speed Sensor) (29 Tooth) 1991-Up	1	
683	84886	Pick-Up, [4T60E / 4T65E] (Speed Sensor) (30 Tooth) 1991-Up	1	8651521
683	84886A	Pick-Up, [4T60E / 4T65E] (Speed Sensor) (31 Tooth) 1991-Up	1	8677645
686	84937	Cover, [TH440-T4] (Governor/Speed-O Housing) 1983-87	1	8644924
686	84938	Cover, [TH440-T4] (Governor/Speed-O Housing) 1988-90	1	8661914
686	84938A	Cover, [TH440-T4] (Governor/Speed-O Housing) (Electronic) 1991-Up	1	8662926
690	84952	Gear, [TH440-T4 / 4T60E / 4T65E] (Parking) 1983-Up	1	8658416
697	84842	Oil Scoop, [TH440-T4 / 4T60E] (Bottom) 1983-93	1	8656242
698	84989	Oil Dam, [TH440-T4 / 4T60E / 4T65E] (Front Planet) 1983-Up	1	8658368
699	84843	Weir, [TH440-T4] (Oil Reservoir) 1983-91	1	8644025
699	84843A	Weir, [4T60E / 4T65E] (Oil Reservoir) 1992-6/98	1	24208548
700	84885	Chain, [TH440-T4 / 4T60E] (With Round Pins) (7/8" Wide) 1983-93	1	8660099
700	33885A	Chain, [4T60E] (With "D" Style Pins) 1994-Up	1	8682603
700	33885A	Chain, [4T60E] (With Mouse Ear Link) **(*Replaces All 1994-Up)**	1	24202447
700	84885M	Chain, [4T65E] (With Mouse Ear Link) ("D" Style Pins) (1/2" Wide) (2-Per Pack) 1997-Up	1	24206434
702	84877AA	Scoop, [TH440-T4] (Chain Scavenging) (1st Design) (For 35 Tooth Sprocket) 1983-E85	1	8656562
702	84877AB	Scoop, [TH440-T4] (Chain Scavenging) (1st Design) (For 33 Tooth Sprocket) 1983-E85	1	8656565
702	84877	Scoop, [TH440-T4 / 4T60E / 4T65E] (Chain Scavenging) (2nd Design) (For 33 Tooth Sprocket) L1985-Up	1	8651622
702	84877A	Scoop, [TH440-T4 / 4T60E / 4T65E] (Chain Scavenging) (2nd Design) (For 35 Tooth Sprocket) L1985-Up	1	8668613
702	84877B	Scoop, [TH440-T4 / 4T60E / 4T65E] (Chain Scavenging) (2nd Design) (For 37 Tooth Sprocket) L1985-Up	1	
705	84818A	Sprocket, [TH440-T4 / 4T60E] (Drive) (33 Tooth) (3.756"OD) 1983-92	1	8651568
705	84818C	Sprocket, [4T60E] (Drive) (33 Tooth) (3.700"OD) 1993-Up	1	8682599
705	84819	Sprocket, [TH440-T4 / 4T60E] (Drive) (37 Tooth) (4.233"OD) 1983-92	1	8644679
705	84819B	Sprocket, [4T60E] (Drive) (37 Tooth) (4.181"OD) 1993-Up	1	8682597
705	84819A	Sprocket, [440-T4 / 4T60E] (Drive) (38 Tooth) 1983-92	1	
705	84818	Sprocket, [440-T4 / 4T60E] (Drive) (35 Tooth) (4.00" OD) 1983-92	1	8644677
705	84818B	Sprocket, [4T60E] (Drive) (35 Tooth) (3.94" OD) 1993-Up	1	
705	84818P	Sprocket, [4T65E] (Drive) (33 Tooth) (Dual Chain Type) (Washer # 279 With 3-Round Solid Tabs) 1997-00	1	
705	84818PA	Sprocket, [4T65E] (Drive) (33 Tooth) (Dual Chain Type) (Washer # 279 Wiith 3-Round Split Tabs that Locks to Sprocket) 2001-Up	1	
705	84818N	Sprocket, [4T65E] (Drive) (35 Tooth) (Dual Chain Type) (Washer # 279 With 3-Round Solid Tabs) 1997-00	1	
705	84818NA	Sprocket, [4T65E] (Drive) (35 Tooth) (Dual Chain Type) (Washer # 279 With 3-Round Split Tabs that Locks to Sprocket) 2001-Up	1	
705	81818M	Sprocket, [4T65E] (Drive) (37 Tooth) (Dual Chain Type) (Washer # 279 With 3-Round Solid Tabs) 1997-00	1	
705	84818MA	Sprocket, [4T65E] (Drive) (37 Tooth) (Dual Chain Type) (Washer # 279 With 3-Round Split Tabs that Locks to Sprocket) 2001-Up	1	
706	84810A	Sprocket, [TH440-T4 / 4T60E] (Driven) (37 Tooth) (4.233"OD) 1983-92	1	8678146
706	84810C	Sprocket, [4T60E] (Driven) (37 Tooth) (4.181"OD) 1993-Up	1	8682602
706	84811	Sprocket, [TH440-T4 / 4T60E] (Driven) (33 Tooth) (3.756"OD) 1983-92	1	8668110
706	84811B	Sprocket, [4T60E] (Driven) (33 Tooth) (3.700"OD) 1993-Up	1	8682600
706	84811A	Sprocket, [TH440-T4 / 4T60E] (Driven) (32 Tooth) 1983-Up	1	

706	84810	Sprocket, [TH440-T4 / 4T60E] (Driven) (35 Tooth) 1983-92	1	8668111
706	84810B	Sprocket, [4T60E] (Driven) (35 Tooth) 1993-Up	1	
706	84811P	Sprocket, [4T65E] (Driven) (37 Tooth) (Dual Chain Type) 1997-Up	1	
706	84811N	Sprocket, [4T65E] (Driven) (35 Tooth) (Dual Chain Type) 1997-Up	1	
706	84811M	Sprocket, [4T65E] (Driven) (33 Tooth) (Dual Chain Type) 1997-Up	1	24212633
713	84870	Support, [TH440-T4] (Driven Sprocket) (1st Design) 1983-86	1	8658097
713	84870A	Support, [TH440-T4] (Driven Sprocket) (2nd Design) (*Retros to 1983) (With Vespel Rings) 1987-Up	1	8668385
713	84870B	Support, [TH440-T4 / 4T60E] (Driven Sprocket) (3rd Design) 1991-Up	1	8651408
713	84870G	Support, [4T65E] (Driven Sprocket) (.125" Wide Ring With Expander) 1997-E98	1	24206327
713	84870H	Support, [4T65E] (Driven Sprocket) (.100" Wide Ring No Expander) (Cast # 24203724) L1998-02	1	24209098
713	84870M	Support, [4T65E] (Driven Sprocket) (Cast # 24219592) 2003-Up	1	
716	75890	Differential Assembly, [TH440-T4] (2.660"OD) (38 Tooth) (Right Angle Sun Gear) 1983-90	1	
716	84890E	Differential Assembly, [TH440-T4 / 4T60E] (2.660"OD) (38 Tooth) (Right Angle Sun Gear) (.705"OD Pin) (30 Tooth Pick-Up) 1991-94	1	
716	84890EA	Differential, [TH440-T4 / 4T60E] (2.660"OD) (38 Tooth) (Right Angle Sun Gear) (.705"OD Pin) (29 Tooth Pick-Up) 1991-94	1	
716	84890EB	Differential, [TH440-T4 / 4T60E] (2.660"OD) (38 Tooth) (Right Angle Sun Gear) (.705"OD Pin) (31 Tooth Pick-Up) 1991-94	1	
716	84890LA	Differential, [4T60E] (2.410"OD) (38 Tooth) (Left Angle Sun Gear) (.705"OD Pin) (31 Tooth Pick-Up) 1995-96	1	
716	84890KA	Differential, [4T60E] (2.410"OD) (38 Tooth) (Left Angle Sun Gear) (.705"OD Pin) (30 Tooth Pick-Up) 1995-96	1	
716	84890L	Differential, [4T60E / 4T65E] (2.410"OD) (38 Tooth) (Right Angle Sun Gear) (.705"OD Pin) (31 Tooth Pick-Up) 1997-Up	1	
716	84890K	Differential, [4T60E / 4T65E] (2.410"OD) (38 Tooth) (Right Angle Sun Gear) (.705"OD Pin) (30 Tooth Pick-Up) 1997-Up	1	
716	75890C	Differential Assembly, [TH440-T4] (2.380"OD) (34 Tooth) (Right Angle Sun Gear) 1983-90	1	
716	84890C	Differential, [TH440-T4 / 4T60E] (2.380"OD) (34 Tooth) (Right Angle Sun Gear) (.705"OD Pin) (30 Tooth Pick-Up) 1991-94	1	
716	84890B	Differential, [TH440-T4 / 4T60E] (2.380"OD) (34 Tooth) (Right Angle Sun Gear) (.705"OD Pin) (29 Tooth Pick-Up) 1991-94	1	
716	84890D	Differential, [TH440-T4 / 4T60E] (2.380"OD) (34 Tooth) (Right Angle Sun Gear) (.705"OD Pin) (31 Tooth Pick-Up) 1991-94	1	
716	84890HA	Differential, [4T60E] (2.170"OD) (34 Tooth) (Left Angle Sun Gear) (.705"OD Pin) (31 Tooth Pick-Up) 1995-96	1	
716	84890FA	Differential, [4T60E] (2.170"OD) (34 Tooth) (Left Angle Sun Gear) (.705"OD Pin) (29 Tooth Pick-Up) 1995-96	1	
716	84890GA	Differential, [4T60E] (2.170"OD) (34 Tooth) (Left Angle Sun Gear) (.705"OD Pin) (30 Tooth Pick-Up) 1995-96	1	
716	84890J	Differential, 4T60E/4T65E (2.170"OD) (34 Tooth) (Right Angle Sun Gear) (.705"OD Pin) (30 Tooth Pick-Up) 1997-Up	1	
716	84890H	Differential, 4T60E/4T65E (2.170"OD) (34 Tooth) (Right Angle Sun Gear) (.705"OD Pin) (31 Tooth Pick-Up) 1997-Up	1	
716	84890GB	Differential Assembly, [4T60E / 4T65E] (2.170"OD) (34 Tooth) (Right Angle Sun Gear) (.845"OD Pin) (30 Tooth Pick-Up) 1997-Up (With 1.430"OD Nose on Rear of the Differential)	1	
716	84890GC	Differential Assembly, [4T60E / 4T65E] (2.170"OD) (34 Tooth) (Right Angle Sun Gear) (.805"OD Pin) (30 Tooth Pick-Up) 1997-Up (With 2.512"OD Nose on Rear of the Differential)	1	
716	84890G	Differential, [4T60E / 4T65E] (2.170"OD) (34 Tooth) (Right Angle Sun Gear) (.784"OD Pin) (30 Tooth Pick-Up) 1997-Up	1	
716	84890GD	Differential, [4T60E / 4T65E] (2.170"OD) (34 Tooth) (Right Angle Sun Gear) (.805"OD Pin) (30 Tooth Pick-Up) 1997-Up (With 1.575"OD Nose on the Rear of the Differential)	1	
716	75890B	Differential Assembly, [TH440-T4] (2.130"OD) (30 Tooth) (Right Angle Sun Gear) 1983-90	1	

TH440-T4/4T60E/4T65E

716	84890BA	Differential, [TH440-T4 / 4T60E] (2.130"OD) (30 Tooth) (Right Angle Sun Gear) (.705"OD Pin) (31 Tooth Pick-Up) 1991-94	1	
716	84890A	Differential, [TH440-T4 / 4T60E] (2.130"OD) (30 Tooth) (Right Angle Sun Gear) (.705"OD Pin) (29 Tooth Pick-Up) 1991-95	1	
716	84890	Differential, [TH440-T4 / 4T60E] (2.130"OD) (30 Tooth) (Right Angle Sun Gear) (.705"OD Pin) (30 Tooth Pick-Up) 1991-95	1	
716	84890PA	Differential, [4T60E] (2.615"OD) (42 Tooth) (Left Angle Sun Gear) (.705"OD Pin) (31 Tooth Pick-Up) 1995-96	1	
716	84890NA	Differential, [4T60E] (2.615"OD) (42 Tooth) (Left Angle Sun Gear) (.705"OD Pin) (30 Tooth Pick-Up) 1995-96	1	
716	84890P	Differential, [4T60E / 4T65E] (2.615"OD) (42 Tooth) (Right Angle Sun Gear) (.705"OD Pin) (31 Tooth Pick-Up) 1997-Up	1	
716	84890N	Differential, [4T60E / 4T65E] (2.615"OD) (42 Tooth) (Right Angle Sun Gear) (.705"OD Pin) (30 Tooth Pick-Up) 1997-Up	1	
717	75890-30	Washer, [TH440-T4 / 4T60E / 4T65E] (Differential Side Gear) (4-Per Set)	1	Sonnax
		VALVE BODIES (REBUILT)		
740	GM-4630	Valve Body, [4T60E] (3-Solenoids) **(*Specify Casting #)** 1991-92	1	
740	GM-4631	Valve Body, [4T60E] (4-Solenoids) 1993-Up	1	
740	GM-4633	Valve Body, [4T65E] (2-Piece Pump) (With Servo Apply Valves) 1997-99	1	
740	GM-4633V	Valve Body, [4T65E] (Volvo) 1999-02	1	
740	GM-4638	Valve Body, [4T65E] (2-Piece Pump) (Without Servo Apply Valves) 2000-02	1	
740	GM-4635	Valve Body, [4T65E] (3-Piece Pump) (1-Hole Pressure Switch) 2003-Up	1	
740	GM-4635V	Valve Body, [4T65E] (Volvo) 2003-Up	1	
740	GM-4635T	Valve Body, [4T65E] (Tap Shift) 2003-Up	1	
		VALVE BODIES		
740	84754	Valve Body, [TH440-T4] (With Small Check Balls Only) 1983-E85 (Cast # 335)	1	
740	84754A	Valve Body, [TH440-T4] (With Large & Small Check Balls) L1985-92 (Cast # 867)	1	
740	84754B	Valve Body, [TH440-T4] 1988-93 (Cast # 041)	1	
740	84754C	Valve Body, [4T60E] (3-Solenoids) (Cast # 284 on Channel Plate) 1991-E93 (Primary 1-2 Accumulator Plug is Steel & Protrudes Out Past the Valve Body)	1	
740	84754D	Valve Body, [4T60E] (3-Solenoids) (Cast # 217 on Channel Plate) L1993-E94 (Primary 1-2 Accumulator Plug is Steel & Protrudes Out Past the Valve Body)	1	
740	84754E	Valve Body, [4T60E] (4-Solenoids) L1994-Up (Primary 1-2 Accumulator Plug is Steel & Protrudes Out Past the Valve Body)	1	
740	84754F	Valve Body, [4T60E] (4-Solenoids) (Cast # 284 on Channel Plate) 1991-E93 (Primary 1-2 Accumulator Plug is Aluminum & Protudes Out Past the Valve Body)	1	
740	84754G	Valve Body, [4T60E] (4-Solenoids) (Cast # 217 on Channel Plate) 1993-E94 (Primary 1-2 Accumulator Plug is Aluminum & Protudes Out Past the Valve Body)	1	
740	84754H	Valve Body, [4T60E] (4-Solenoids) L1994-Up (Primary 1-2 Accumulator Plug is Aluminum & Protudes Out Past the Valve Body)	1	
740	84754I	Valve Body, [4T60E] (4-Solenoids) (Cast # 284 on Channel Plate) 1991-E93 (Primary 1-2 Accumulator Plug is Steel & Protudes Out Past the Valve Body)	1	
740	84754K	Valve Body, [4T60E] (4-Solenoids) (Cast # 217 on Channel Plate) L1993-E94 (Primary 1-2 Accumulator Plug is Steel & Protudes Out Past the Valve Body)	1	
740	84754L	Valve Body, [4T60E] (4-Solenoids) (Cast # 217 on Channel Plate) L1993-E94 (Primary 1-2 Accumulator Plug is Steel & is Recessed in from the Valve Body)	1	
740	84754N	Valve Body, [4T60E] (4-Solenoids) (Cast # 284 on Channel Plate) 1991-E93 (Primary 1-2 Accumulator Plug is Steel & is Recessed in from the Valve Body) (Cast # 764 *Only)	1	
740	84754O	Valve Body, [4T60E] (4-Solenoids) L1994-Up (Primary 1-2 Accumulator Plug is Steel & is Recessed in from the Valve Body)	1	
740	84754J	Valve Body, [4T65E] (4-Solenoids) (2-Square & 2-Round) 1997-99 (With Reverse Servo Boost Valve & Forward Servo Boost Valve)	1	

740	84754M	Valve Body, [4T65E] (4-Solenoids) (2-Square & 2-Round) 2000-02 (*Does Not Have a Reverse or a Forward Servo Boost Valve) (The EPC Solenoid is 1.320"OD)	1	
740	84754P	Valve Body, [4T65E] (4-Solenoids) (2-Square & 2-Round) 2003-Up (*Does Not Have a Reverse or a Forward Servo Boost Valve) (The EPC Solenoid is .862:OD) (*Uses 4-Wire Manifold Pressure Switch)	1	
740	84754Q	Valve Body, [4T65E] (4-Solenoids) (2-Square & 2-Round) 2003-Up (*Does Not Have a Reverse or a Forward Servo Boost Valve) (EPC Is .862"OD) (*Uses 1-Wire Manifold Switch) 2003-Up	1	
740	84754V	Valve Body, [4T65E] (Volvo) 1999-Up	1	
		VALVE BODY COMPONENTS		
209	84957	Bearing, [TH440-T4 / 4T60E] (Pump Shaft) 1983-Up	1	8644516
209	84957A	Bearing, [4T65E] (Pump Shaft)	1	
741	SC4T60E	Sure Cure Kit, [4T60E] 1993-96	1	Sonnax
741	SC4T60E-1	Sure Cure Kit, [4T60E] 1997-Up	1	Sonnax
741	84754-08K	TCC Regulator Valve Kit, [4T60E] (PWM) **(*Uses 84754-RM Reamer)** 1991-93	1	Sonnax
	84754RM	Reamer, (*For 84754-08K)	1	Sonnax
741	84754-22K	TCC Apply Valve, [TH440-T4 / 4T60E] 1983-96	1	Sonnax
741	84981	Spring, [TH440-T4] (TCC) (Valve) 1983-Up	1	8656018
741	84680	Plug, [TH440-T4] (TCC) 1983-Up	1	8649434
741	84754-16K	TCC Apply Valve, [TH440-T4 / 4T60E] (Oversized) **(*Uses 84754-TL Reamer)** 1983-96	1	Sonnax
741	84754-98K	TCC Apply Valve, [4T60E] 1997-Up	1	Sonnax
741	84754-97K	TCC Apply Valve, [4T60E] (Oversized) **(*Uses 84754-TL, & 84754-DJ2)** 1997-Up	1	Sonnax
	84754-DJ2	Drill Jig, [4T60E] (TCC Apply Valve Bore) 1997-Up	1	Sonnax
	84754-TL	Reamer, (*For 84754-DJ2)	1	Sonnax
741	84812	Spring, [4T60E] (Anti-Shutter) 1991-Up	1	
741	84754-01K	TCC Regulator Valve Kit, [4T60E] (Sleeve & Isolator Valve Kit) 1993-Up	1	Sonnax
741	85754-29	Retainer Set, [TH440-T4 /4T60E / 4T65E] (Forward & Reverse Servo Boost Valve Retainer Roll Pins) (10-Per Set)	1	Sonnax
741	84754-40K	Servo Boost Valve Kit, [4T60E / 4T65E] (Forward & Reverse) (Includes: 1-Oversize Valve, 2-Springs, 1-Retaining Pin) **(*Must Use 84754-TL2 Reamer for 4T60E or 4T65E and 84754-TL for 4T60)**	1	Sonnax
	84754-TL2	Reamer, (*For 84754-40K) (*Fits 4T60E & 4T65E)	1	Sonnax
	84754-TL4	Reamer, (*For 84754-40K) (4T60) (TH440-T4 *Only)	1	Sonnax
741	84754-44	Valve, 4T65E (Torque Signal) (Oversize) **(*Use With Reamer 84754-TL44)**	1	Sonnax
	84754-TL44	Reamer, (*For 84754-44)	1	Sonnax
741	10000-11	Check Ball, [TH440-T4 / 4T60E] (Valve Body) (.375") (Torlon)	AR	Sonnax
741	84754-43K	Valve, [4T65E] (TCC Apply) (With Teflon Rings) 1997-Up	1	Sonnax
741	84754-34K	TCC Regulated Apply Valve Kit, [4T65E] (Valve, Sleeve, & Spring) 1997-Up	1	Sonnax
	84754-TL3	Tool Kit, (*For 84754-34K) [4T65E]	1	Sonnax
741	SC-4T65E	Sure Cure Kit, [4T65E] 1997-Up **(*Requires Tools # 84754-TL3, T-VB-FIX & F-84596-TL)**	1	Sonnax
	F-84596-TL	Reamer Set, (*For 84596-02K)	1	Sonnax
	VB-FIX	Valve Body Reaming Fixture	1	Sonnax
741	84754-30K	Pressure Regulator Valve Kit, [4T65E] (Valve & Sleeve) 1997-Up	1	Sonnax
741	84754-37K	Valve, [4T60E] (3-2 Manual Downshift)	1	Sonnax
741	84754-39K	Valve, [4T60E] (4-3 Manual Downshift)	1	Sonnax
741	84754-12K	Modulated Boost Valve, [TH440-T4 / 4T60E] (With Sleeve & Spring) (Low Ratio) 1983-Up	1	Sonnax
741	84754-17K	Modulated Boost Valve, [TH440-T4 / 4T60E] (With Sleeve & Spring) (High Ratio) 1983-Up	1	Sonnax
741	84754-25K	Modulated & Reverse Boost Kit, [TH440-T4 / 4T60E] (High Ratio) 1983-Up	1	Sonnax
741	84754-24K	Modulated & Reverse Boost Kit, [TH440-T4 / 4T60E] (Low Ratio) 1983-Up	1	Sonnax
741	84965	Throttle Valve Plunger, [TH440-T4] (.357") (Steel) 1983-Up	1	

741	84965A	Throttle Valve Plunger, [TH440-T4] (.396") (Steel) 1983-Up	1	
741	8649317	Bushing, [TH440-T4] (Throttle Valve Plunger) (.540") (Stamped K) 1983-Up	1	8649317
741	8649641	Bushing, [TH440-T4] (Throttle Valve Plunger) (.625") (Stamped L) 1983-Up	1	8649641
741	8649730	Bushing, [TH440-T4] (Throttle Valve Plunger) (.725") (Stamped M) 1983-Up	1	8649730
741	8646435	Bushing, [TH440-T4] (Throttle Valve Plunger) (.745") (Stamped H) 1983-Up	1	8646435
741	8682218	Bushing, [TH440-T4] (Throttle Valve Plunger) (.775") (Stamped P) 1983-Up	1	8682218
741	84754-19K	Reverse Boost Valve, [TH440-T4 / 4T60E] (With Sleeve & Spring) (Low Ratio) 1983-Up	1	Sonnax
741	84754-14K	Reverse Boost Valve, [TH440-T4 / 4T60E] (With Sleeve & Spring) (High Ratio) 1983-Up	1	Sonnax
741	84754-23K	Valve, [TH440-T4 / 4T60E] (1-2 Shift) 1983-Up	1	Sonnax
741	84754-36K	Valve, [4T60E] (2-3 Shift) (Anodized) 1994-97	1	Sonnax
741	84754-38K	Valve, [4T60E] (3-4 Shift) (Anodized) 1994-97	1	Sonnax
741	84754-29	Retaining Clip Set, [4T60E / 4T65E] (Forward & Reverse Servo Boost Valve Retainer Roll Pins) (10-Per Set)	1	Sonnax
		HARD PARTS (Continued)		
746	84997A	Plate, [TH440-T4] (Accumulator Cover to Case) 1983-91	1	8649476
746	84532F	Plate, [4T60E] (Accumulator Cover to Case) 1991-Up	1	8682085
746	84528	Plate, [4T65E] (Accumulator Cover to Case) 1997-Up	1	
747	84598	Plate, [TH440-T4] (Valve Body) 1983-E85	1	24201637
747	84598A	Plate, [TH440-T4] (Valve Body) (With 2-Piece Type TCC Regulator Valve) L1985-91	1	24201630
747	84598B	Plate, [TH440-T4] (Valve Body) (With 1-Piece Type TCC Regulator Valve) L1985-90	1	8658871
747	84599	Plate, [4T65E] (Valve Body) (With Bonded Gaskets) 1997-03	1	24209401
747	84599A	Plate, [4T65E] (Valve Body) (With Bonded Gaskets) 2004-Up	1	
755	84757	Channel Plate, [TH440-T4] (Cast # 027) 1983-E85	1	
755	84757D	Channel Plate, [TH440-T4] (Cast # 827) (No Switch) L1985-87	1	
755	84757B	Channel Plate, [TH440-T4] (Cast # 827) (With 1-Switch) L1985-87	1	
755	84757C	Channel Plate, [TH440-T4] (Cast # 423) (No Switch) 1988-91	1	8668995
755	84757CA	Channel Plate, [TH440-T4] (Cast # 423) (With 1-Switch) L1988-91	1	
755	84757CB	Channel Plate, [TH440-T4] (Cast # 971) (No Switch) 1988-91	1	
755	84757E	Channel Plate, [TH440-T4] (Cast # 208) (No Switch) 1988-91	1	
755	84757CC	Channel Plate, [TH440-T4] (Cast # 733) (No Switch) 1989	1	
755	84757CD	Channel Plate, [4T60E] (Cast # 284) (No Switch) 1990	1	
755	84757F	Channel Plate, [4T60E] 1991-92	1	
755	84757G	Channel Plate, [4T60E] (Cast # 217) (No Switch) 1993-94 **(*Does Not Use a TCC Piston)**	1	
755	84757GA	Channel Plate Assembly, [4T60E] (Cast # 217) 1993-94	1	
755	84757GB	Channel Plate, [4T60E] (Cast # 217) (No Switch) 1993-94 **(*Uses a TCC Piston)**	1	
755	84757GC	Channel Plate, [4T60E] (Cast # 353) 1993-94	1	
755	84757H	Channel Plate, [4T60E] (Cast # 594) (No Switch)	1	
755	84757HA	Channel Plate, [4T60E] (Cast # 656) (With Pan Bolt Studs) 1994	1	
755	84757GD	Channel Plate, [4T60E] (Cast # 657) (No Pan Bolt Studs) (No TCC Piston)	1	
755	84757GE	Channel Plate, [4T60E] (Cast # 657) (No Pan Bolt Studs) (With TCC Piston)	1	
755	84757HB	Channel Plate, [4T60E] (Cast # 656) (No Pan Bolt Studs) (With TCC Piston)	1	
755	84757HC	Channel Plate, [4T60E] (Cast # 656) (No Pan Bolt Studs) (No TCC Piston)	1	
755	84757I	Channel Plate, [4T60E] (Cast # 760)	1	
755	84757J	Channel Plate, [4T65E] (Cast # 038) 1997-02 (With Cooler Drainback Ball)	1	
755	84757P	Channel Plate, [4T65E] (Cast # 496) (With Axle Stabilizer Bore) (Volvo 1999-02) (With Cooler Drainback Ball)	1	
755	84757K	Channel Plate, [4T65E] (Cast # 900) 1997-02 (No Cooler Drainback Ball)	1	

755	84757M	Channel Plate, [4T65E] (Cast # 896) Mid 2002-Up (No Cooler Drainback Ball)	1	
755	84757N	Channel Plate, [4T65E] (Cast # 086) Mid 2002-Up (With Cooler Drainback Ball)	1	
755	84757O	Channel Plate, [4T65E] (Cast # 721) Mid 2002-Up (With Cooler Drainback Ball)	1	
755	84757V	Channel Plate, [4T65E] (Cast # 720 or 897) 2003-Up (Volvo & GM Tap Shift) (With Cooler Drainback Ball)	1	
755S	84099	Sleeve, [TH440-T4 / 4T60E] (Presses in Channel Plate) 1983-Up	1	8656077
755S	84099A	Sleeve, [4T65E] (Presses in Channel Plate) 1997-Up	1	
475	84757-01K	Valve, [4T65E] (Converter Relief) (In Channel Plate) (Comes With 10-Relief Valves)	1	Sonnax
755	84678	Retainer, [TH440-T4] (3-2 Line Control Valve) 1983-Up	1	8658678
755	84959A	Retainer, [TH440-T4] (Manual Valve to Link) (2nd Design) 1983-Up	1	8656787
760	84791	Case, [TH440-T4] 1983-E85	1	
760	84791A	Case, [TH440-T4] (With 2-Round Threaded Bosses on Top of Case) L1985-91	1	8662928
760	84792A	Case, [TH440-T4] (Without Round Bosses on Top of Case) 1991-92	1	
760	84792	Case, [TH440-T4] (Without Round Bosses on Top of Case) L1985-91	1	
760	84793	Case, [4T60E] (Square Top) (With 2-Round Threaded Bosses on Top of Case) 1991-Up	1	
760	84793A	Case, [4T60E] (Round Top) (Quad 4) 1991-Up	1	
760	84793M	Case, [4T65E] (Cast # 24204411 or 24208026) (Cooler Fittings Under Bell, No Check Ball) 1997-Up	1	
760	84793J	Case, [4T65E] (Cast# 24209508) (Cooler Fittings Under Bell With No Check Ball) 1997-Up	1	
760	84793K	Case, [4T65E] (Cast # 24209508) (Cooler Fittings Under Bell With Check Ball) 1997-Up	1	
760	84793L	Case, [4T65E] (Cast # 24208026) (Cooler Fittings Under Bell With Check Ball) 1997-Up	1	
760	84793O	Case, [4T65E] (Cast # 24208834) (Quad 4) 1997-Up	1	
760	84793V	Case, [4T65E] (Volvo) (Top Bolts are 4-7/8") (Starter at 2:00) 1997-Up	1	
		CASE COMPONENTS		
921	84742	Band Stop, [TH440-T4] (1-2 Band) (Plastic) 1983-Up	1	8649302
		HARD PARTS (Continued)		
765	84801	Pan, [TH440-T4] (Bottom) 1983-91	1	8662942
765	84801E	Pan, [4T60E] (Bottom) (Uses 13mm Bolts) 1991-Up	1	8641914
765	84810F	Pan, [4T65E] (Bottom) (Uses 10mm Bolts) 1997-Up	1	
766	84995	Pan, [TH440-T4] (Side Cover) (Tin) 1983-91	1	8651472
766	84995A	Pan, [4T60E] (Side Cover) (Aluminum) (With 4-Threaded Holes) 1991-Up	1	8685537
766	84995B	Pan, [4T60E] (Side Cover) (Aluminum) (With 6-Threaded Holes) 1991-Up	1	
766	84995M	Pan, [4T65E] (Side Cover) (Aluminum) (With 6-Threaded Holes) (Cast # 24211956 or 24203988) 1997-Up	1	
766	84995V	Pan, [4T65E] (Side Cover) (Aluminum) (Volvo Style) (Cast # 24211926) 1997-Up	1	
766	84995-01	Side Cover Plate, [TH440-T4] (Repairs Inner Gasket Leaks on Side Cover) 1983-Up	1	Sonnax
770	84996	Extension Housing, [4T60E / 4T65E] (Bushing Type) 1991-Up	1	8651908
770	84996A	Extension Housing, [4T60E / 4T65E] (Bearing Type) (1-1/2"ID of Bearing) 1996-Up	1	
770	84996B	Extension Housing, [4T60E / 4T65E] (Turbo) (Bearing Type) (5" Long) (2-1/2"ID of Bearing) 1996-Up	1	
770	84996V	Extension Housing, [4T65E] (Volvo) (4-1/2" Long) 1999-Up	1	
774	84922	Housing, [TH440-T4] (Driven Speed-O Gear) 1983-Up	1	25519848
775	B79	Bolt, [TH440-T4 / 4T60E] (Converter) (Metric) 1983-Up	3	
843	84894	Bracket, [TH440-T4] (Modulator) 1983-91	1	8627650
845	84873	Reluctor Wheel, [4T65E] (Input Speed Sensor Pick-Up)	1	24212217
847	75896	Gear, [TH440-T4] (Speed-O Drive) (10 Teeth) (Green) 1983-Up	1	
848	75998E	Gear, [TH440-T4] (Speed-O Driven) (27 Teeth) (Black) 1983-Up	1	

TH440-T4/4T60E/4T65E

848	75998A	Gear, [TH440-T4] (Speed-O-Driven) (28 Teeth) (Yellow) 1983-Up	1	
854	8656287	Cushion Spacer, [TH440-T4] (Reverse Servo) 1983-Up	1	8656287
	K84928	Snap Ring Kit, [TH440-T4 / 4T60E / 4T65E] 1983-Up	1	62680
862	84600	Snap Ring, [TH440-T4 / 4T60E] (Holds 4th Clutch Retainer) (3-5/16"OD) 1983-Up	1	8644068
862	84600A	Snap Ring, [4T65E] (Holds 4th Clutch Retainer) (3-9/16"OD) 1997-Up	1	
873	84601	Snap Ring, [TH440-T4] (Holds 2nd Clutch Beveled Pressure Plate In) 1983-86	1	8661141
873	84601A	Snap Ring, [TH440-T4] (Holds 2nd Clutch Beveled Pressure Plate In) (With Eye Ends) 87-89	1	
873	84601B	Snap Ring, [TH440-T4 / 4T60E] (Holds 2nd Clutch Beveled Pressure Plate In) (.060") 90-Up	1	8668567
873	84601C	Snap Ring, [4T65E] (Holds 2nd Clutch Beveled Pressure Plate In) (.090") 1997-Up	1	
874	84726	Snap Ring, [TH440-T4 / 4T60E] (Holds 2nd Clutch Retainer) (5-5/8"OD) 1983-Up	1	8644110
874	84726A	Snap Ring, [4T65E] (Holds 2nd Clutch Retainer) (3-1/2"OD) 1997-Up	1	
876	75551	Snap Ring, [TH440-T4 / 4T60E / 4T65E] (Holds Input Clutch Pressure Plate In) 1983-Up	1	8652055
877	84878	Snap Ring, [TH440-T4 / 4T60E / 4T65E] (Input Housing to 3rd Clutch Housing) 1983-Up	1	8644726
878	84602	Snap Ring, [TH440-T4 / 4T60E / 4T65E] (Holds 3rd Clutch Pressure Plate In) 1983-Up	1	8644165
879	84878	Snap Ring, [TH440-T4 / 4T60E / 4T65E] (Holds 3rd Clutch Pressure Retainer)	1	
880	84603	Snap Ring, [TH440-T4 / 4T60E / 4T65E] (Holds Drive Gear to Turbine Shaft) 1983-Up	1	8631210
881	84604	Snap Ring, [TH440-T4 / 4T60E] (Holds Input Sprag in Outer Race) 1983-E93	2	8658889
881	84604A	Snap Ring, [4T60E / 4T65E] (Holds Input Sprag in Outer Race) (Spiral) L1993-Up	2	
	84605	Snap Ring, [4T60E] (Holds 1-2 Sprag In) 1991-Up	1	5606009
888	84954	Snap Ring, [TH440-T4 / 4T60E / 4T65E] (Holds Pinion Pins in Differential Housing) (Spiral) 1983-Up	1	
889	84954	Snap Ring, [TH440-T4 / 4T60E / 4T65E] (Holds Differential Ring Gear to Case) 1983-Up	1	8631078
895	84606	Snap Ring, [4T60E / 4T65E] (Output Shaft) (Long) (Internal) (Square) 1995-Up	1	
895	84606A	Snap Ring, [TH440-T4 / 4T60E] (Output Shaft to Differential) (Flat) 1983-Up	1	8631136
896	84607	Snap Ring, [TH440-T4 / 4T60E / 4T65E] (Holds Reverse & 1-2 Servo In) 1983-Up	1	8644091
897	84679	Snap Ring Clip, [TH440-T4 / 4T60E] (Holds Servo Pin to Piston) 1983-Up	1	8656727
900	K84839	Servo Assembly, [4T60E / 4T65E] (Manual 2-1) (Forward) 1991-Up	1	8651939
901	84991C	Spring, [4T60E / 4T65E] (Manual 2-1) (Forward) 1991-Up	1	8651544
902	84839	Piston, [4T60E / 4T65E] (Manual 2-1) (Forward) 1991-Up	1	8651547
904	84839A	Housing, [4T60E /4T65E] (Manual 2-1) (Forward) 1991-Up	1	8651917
905	K84840	Servo Assembly, [TH440-T4] (1-2 Servo) 1983-91	1	
905	K84840A	Servo Assembly, [4T60E] (1-2 Servo) (3-Bolt Cover Without O-Ring Groove) 1991-Up	1	
905	K84840M	Servo Assembly, [4T65E] (1-2 Servo) (Lathe Cut Seal Type Cover) 1997-Up	1	
906	84991	Spring, [TH440-T4] (1-2 Servo Cushion) (1st Design) (Orange/Green) (Inner) 1985-91	1	8668123
906	84991A	Spring, [TH440-T4] (1-2 Servo Cushion) (2nd Design) (Orange/Blue) (Inner) 1985-91	1	8675078
906	84991B	Spring, [TH440-T4] (1-2 Servo Cushion) (Green) (Inner) 1985-91	1	8646456
906	84991M	Spring, [4T65E] (1-2 Servo Cushion) (.215" Coil Diameter) 1997-Up	1	
907	84840	Piston, [TH440-T4] (1-2 Servo) (1.180" Tall) (.440"ID) 1983-91	1	8646921
907	84840M	Piston, [4T65E] (1-2 Servo) (.980" Tall) (.555"ID) 1997-Up	1	
907	84791-01K	Piston Kit, [TH440-T4 / 4T60E] (1-2 Servo) (Piston, Sleeve, Spacer, Seal) **(*No Machining Required)**	1	Sonnax
908	84572E	Pin, [TH440-T4] (1-2 & Reverse Servo) (Extendo) 1983-91	1	Teckpak
908	84571B	Pin, [TH440-T4] (1-2 Servo) (2.215") (1-Ring & 1-Wide Band) 1983-91	1	8656537
908	84571C	Pin, [TH440-T4] (1-2 Servo) (2.255") (1-Ring) 1983-91	1	8656539
908	84571D	Pin, [TH440-T4] (1-2 Servo) (2.295") (2-Ring) 1983-91	1	8656540
908	84571E	Pin, [TH440-T4] (1-2 Servo) (2.335") (3-Ring) 1983-91	1	8656541
908	84571	Pin, [TH440-T4] (1-2 Servo) (2.375") (1-Wide Band) 1983-91	1	8656542
908	84571A	Pin, [TH440-T4] (1-2 Servo) (2.415") (2-Ring & 1-Wide Band) 1983-91	1	8656538
909	84840A	Cover, [TH440-T4] (1-2 & Reverse Servo) 1983-91	1	8656530

909	84840B	Cover, [4T60E] (1-2 Servo) (3-Bolt With O-Ring Groove) 1991-Up	1	8651916
909	84840J	Cover, [4T65E] (1-2 Servo) (Lathe Cut Seal Type) 1997-Up	2	
910	K84838	Servo Assembly, [TH440-T4] (Reverse Servo) 1983-91	1	
910	K84838A	Servo Assembly, [4T60E] (Reverse Servo) (Cover is 1-1/4" Overall Thickness) 1991-Up	1	
910	K84838M	Servo Assembly, [4T65E] (Reverse Servo) (Cover is 3/4" Overall Thickness) 1997-Up	1	
911	8649147	Spring, [TH440-T4 / 4T60E] (Reverse Servo) (Large) 1983-95	1	8649147
911	84991D	Spring, [4T60E / 4T65E] (Reverse Servo) (Large) 1996-Up	1	24202538
911	84991E	Spring, [TH440-T4 / 4T60E] (Reverse Servo) (Small) 1983-95	1	8668121
912	84838	Piston, [TH440-T4 / 4T60E] (Reverse Servo) 1983-Up	1	8648922
913	84572E	Pin, [TH440-T4] (Reverse Servo Apply) (2.790") (2-Wide Bands) 1983-Up	1	8658239
913	84572H	Pin, [TH440-T4] (Reverse Servo Apply) (2.835") (3-Grooves & 1-Wide Band) 1983-Up	1	8658240
913	84572G	Pin, [TH440-T4] (Reverse Servo Apply) (2.875") (2-Grooves & 1-Wide Band) 1983-Up	1	8658241
913	84572F	Pin, [TH440-T4] (Reverse Servo Apply) (2.915") (1-Groove & 1-Wide Band) 1983-Up	1	8658243
913	84572D	Pin, [TH440-T4] (Reverse Servo Apply) (2.955") (No Groove) 1983-Up	1	8658245
913	84572	Pin, [TH440-T4] (Reverse Servo Apply) (2.995") (1-Groove) 1983-Up	1	8658246
913	84572A	Pin, [TH440-T4] (Reverse Servo Apply) (3.040") (2-Grooves) 1983-Up	1	8658247
913	84572B	Pin, [TH440-T4] (Reverse Servo Apply) (3.080") (3-Grooves) 1983-Up	1	8658248
913	84572C	Pin, [TH440-T4] (Reverse Servo Apply) (3.120") (4-Grooves) 1983-Up	1	8658244
913	84572M	Pin, [4T60E / 4T65E] (Reverse Servo Apply) (4.735" Long) 1991-Up	1	24206136
914	84838A	Cover, [TH440-T4] (Reverse Servo) 1983-91	1	8656530
914	84838B	Cover, [4T60E] (Reverse Servo) (1-1/4" Overall Thickness) 1991-Up	1	
914	84838M	Cover, [4T65E] (Reverse Servo) (3/4" Overall Thickness) 1997-Up	1	
929	K84892	Accumulator Assembly, [TH440-T4 / 4T60E] (1-2 & 2-3) (1-Spring Type) 1983-Up	1-2	
925	K84932	Accumulator Assembly, [4T60E] (1-2) (2-Springs on 1-Side) (7/8" Thick Piston) 1991-Up	1	
930	K84933	Accumulator Assembly, [4T60E] (2-3) (2-Springs on 1-Side) (1" Thick Piston) 1991-Up	1	
925	K84932A	Accumulator Assembly, [4T60E] (1-2) (1-Spring Each Side) (.308"OD Pin) (*Some) 1995-Up	1	
925	K84932M	Accumulator Assembly, [4T65E] (1-2) (1-Spring Each Side) (.235"OD Pin) 1997-Up	1	
926	84993	Spring, [TH440-T4 / 4T60E] (1-2 Accumulator) (Green) 1983-Up	1	8668487
926	84993C	Spring, [TH440-T4] (1-2 Accumulator) (Pink / White) 1983-Up	1	8668484
926	84993B	Spring, [TH440-T4 / 4T60E] (1-2 Accumulator) (Orange) 1983-Up	1	8649091
926	84960	Spring, [TH440-T4] (3-4 Accumulator) (Blue) 1983-Up	1	8649092
926	84993A	Spring, [TH440-T4] (1-2 Accumulator) (Red) 1983-Up	1	8646400
926	84993D	Spring, [TH440-T4] (1-2 Accumulator) (Outer) (Pink) 1991-Up	1	8679540
927	84880	Piston, [TH440-T4 / 4T60E] (1-2 & 3-4 Accumulator) (1-Spring Type) (*Also Fits Later Models Using 2-Springs on 1-Side) (7/8" Thick) 1983-Up	1	8651927
927	K84880A	Piston Kit, [4T60E] (1-2 & 2-3 Accumulator) (2-Pistons, Spring & Spacer) 1991-Up	1	Transgo
927	84880C	Piston, [4T65E] (1-2 Accumulator) 1997-Up	1	Transgo
927	84880A	Piston, [4T60E] (1-2 Accumulator) (1-Spring Each Side) (.308"OD Pin) (*Some) 1995-Up	1	8651933
928	84876	Pin, [TH440-T4 / 4T60E] (1-2 & 2-3 Accumulator) (.308"OD) 1983-Up	1	8644298
928	84876B	Pin, [4T65E] (1-2 & 2-3 Accumulator) (.235"OD) 1997-Up	1	
928	84573-01K	Pin, [TH440-T4 / 4T60E] (1-2 & 2-3 Accumulator) (Oversized) (4-Per Pack) 1983-Up	1	Sonnax
928	84573-02K	Pin & Reamer Kit, [TH440-T4 / 4T60E] (1-2 & 2-3 Accumulator) (Oversized) 1983-Up	1	Sonnax
		HARD PARTS (Continued)		
929	84828A	Housing, [TH440-T4 / 4T60E] (1-2 & 2-3 Accumulator) (Cast # 8677163) 1983-Up	1	8656740
929	84828M	Housing, [4T65E] (1-2 & 2-3 Accumulator) (Cast # 24203536) 1997-Up	1	
931	84892	Spring, [TH440-T4 / 4T60E] (2-3 Accumulator) (Blue) 1983-Up	1	
932	84880	Piston, [TH440-T4 / 4T60E] (2-3 Accumulator) 1983-Up	1	
932	84880C	Piston, [4T65E] (2-3 Accumulator) 1997-Up	1	

TH440-T4/4T60E/4T65E

934	84988B	Cover, [TH440-T4] (1-2 & 2-3 Accumulator) (With Tubes) 1983-90	1	
934	84679B	Tube, [TH440-T4] (Governor Feed) (Short) 1983-Up	1	8656381
934	84679C	Tube, [TH440-T4] (Governor Feed) (Long) 1983-Up	1	8656380
934	84988A	Cover, [4T60E] (1-2 & 2-3 Accumulator) (With Tubes) (Cast # 8651533) 1991-Up	1	8662985
934	K84988A	Cover Assembly, [4T60E] (1-2 & 2-3 Accumulator) (With Pistons & Housing) (Cast # 8651533) (*All Except (4.9L) Cadillac) (No Tubes) 1991-Up	1	
934	K84988C	Cover Assembly, [4T60E] (1-2 & 2-3 Accumulator) (With Pistons & Housing) (Cast # 8651533) (*Only (4.9L) Cadillac) (No Tubes) 1991-Up	1	
934	84988M	Cover, [4T65E] (1-2 & 2-3 Accumulator) (With Tubes) (Cast # 24205584) 1997-Up	1	
934	K84988M	Cover Assembly, [4T65E] (1-2 & 2-3 Accumulator) (With Pistons & Housing) (Cast # 24205584) (Without Tubes) 1997-Up	1	
935	K84929	Accumulator Assembly, [TH440-T4] (Input) (With Steel Piston) 1983-Up	1	8646927
935	K84929A	Accumulator Assembly, [4T60E] (3-4) (With 2" Tall Cover) 1991-Up	1	
935	K84929M	Accumulator Assembly, [4T65E] (3-4) (With 1-3/4" Tall Cover) 1997-Up	1	
936	84960A	Spring, [TH440-T4] (Input Accumulator) (Outer) (Orange) 1985-91	1	8646399
936	84960B	Spring, [4T60E] (3-4 Accumulator) (Outer) 1991-Up	1	8651594
936	84960D	Spring, [4T65E] (3-4 Accumulator) (Outer) (Yellow) 1997-Up	1	
936	84960C	Spring, [4T60E] (3-4 Accumulator) (Inner) 1991-Up	1	8651595
936	84960E	Spring, [4T65E] (3-4 Accumulator) (Inner) (Yellow) 1997-Up	1	
937	84880D	Piston, [TH440-T4] (Input Accumulator) (Steel) 1983-Up	1	
937	84880E	Piston, [4T60E] (3-4 Accumulator) (Aluminum) (1.710"OD) 1991-Up	1	
937	84880M-01	Piston, [4T65E] (3-4 Accumulator) (Aluminum) (1.770"OD) 1997-Up	1	Sonnax
938	84691	Pin, [TH440-T4] (Input Accumulator) 1983-Up	1	8658227
938	84876A	Pin, [4T60E] (3-4 Accumulator) (1-3/4" Long) 1991-Up	1	8682271
938	84876C	Pin, [4T65E] (3-4 Accumulator) (1-5/8" Long) 1997-Up	1	
939	84875	Canister, [4T60E] (3-4 Accumulator Piston) (2" Tall) 1991-Up	1	8651468
939	84875M	Canister, [4T65E] (3-4 Accumulator Piston) (1-3/4" Tall) 1997-Up	1	
940	K84927	Accumulator Assembly, [TH440-T4 / 4T60E] (TCC) 1983-Up	1	8646926
941	84892A	Spring, [TH440-T4 / 4T60E] (TCC Accumulator) 1983-Up	1	8656097
942	84880F	Piston, [TH440-T4 / 4T60E] (TCC Accumulator) 1983-Up	1	
943	84691A	Pin, [TH440-T4 / 4T60E] (TCC Accumulator) 1983-Up	1	8656730
945	K84931	Accumulator Assembly, [TH440-T4] (Input) (With Steel Piston) 1983-91	1	
960	84988A	Piston, [TH440-T4] (4th Clutch) (2.190" Tall) (1st Design) 1983-85	1	8644063
960	84888	Piston, [TH440-T4 / 4T60E / 4T65E] (4th Clutch) (2" Tall) 1986-Up	1	8661014
962	84929	Piston, [TH440-T4] (2nd Clutch) 1983-91	1	24204370
962	84983E	Piston, [4T60E] (2nd Clutch) (5-1/8"OD) (With Bonded Rubber) 1991-Up	1	24201154
962	84928	Piston, [4T65E] (2nd Clutch) (5-3/8"OD) (With Bonded Rubber) 1997-Up	1	24208336
964	84764	Piston, [TH440-T4 / 4T60E] (Input Clutch) (For 8-Clutches on 3rd Clutch) 1983-91	1	8668295
964	84764A	Piston, [4T60E / 4T65E] (Input Clutch) (For 10-Clutches on 3rd Clutch) 1991-Up	1	24203479
965	84760	Piston, [TH440-T4] (3rd Clutch) 1983-91	1	8646924
965	84760A	Piston, [4T60E] (3rd Clutch) (Bonded) (With Check Ball) 1991-96	1	8682736
965	84930	Piston, [4T60E / 4T65E] (3rd Clutch) (Bonded) (No Check Ball) 1997-Up	1	24205378
970	84720	Retainer W/Springs, [TH440-T4 / 4T60E] (4th Clutch) (3-3/8"OD) 1983-Up	1	8661081
970	84720M	Retainer W/Springs, [4T65E] (4th Clutch) (3-5/8"OD) 1997-Up	1	
972	84721	Retainer W/Springs, [TH440-T4] (2nd Clutch) 1983-86	1	8644109
972	84721A	Retainer W/Springs, [4T60E] (2nd Clutch) 1987-91	1	8668534
972	84721B	Retainer W/Springs, [4T60E] (2nd Clutch) (13/16" Tall) 1991-Up	1	8675319
972	84721M	Retainer W/Springs, [4T65E] (2nd Clutch) (1-7/16" Tall) 1997-Up	1	
974	84722	Retainer W/Springs, [TH440-T4 / 4T60E] (Input Clutch) (With 16-Springs) 1983-Up	1	8644151

974	84722M	Retainer W/Springs, [4T65E] (Input Clutch) (With 14-Springs) 1997-Up	1	
975	84723	Guide Retainer W/Springs, [TH440-T4 / 4T60E] (3rd Clutch) (With 12-Springs) 1983-Up	1	8668071
975	84723M	Guide Retainer W/Springs, [4T65E] (3rd Clutch) (With 18-Springs) 1997-Up	1	
985	84766	Housing, [TH440-T4] (3rd Clutch) 1983-88	1	8656310
985	84756A	Housing, [TH440-T4 / 4T60E] (3rd Clutch) (For Bonded Piston) (No Check Valve) 1989-Up	1	8668359
985	84756M	Housing, [4T65E] (3rd Clutch) (With Check Valve) 1997-Up	1	
989	84725	Retainer, [TH440-T4] (Input Sprag Clutch) 1983-86	1	8644044
989	84725A	Retainer, [TH440-T4 / 4T60E] (Input Sprag Clutch) (12 Internal Teeth) 1987-93	1	8658796
991	K84676	Linkage Assembly, [TH440-T4] (Internal) (13-1/2" Park Rod) 1984-E90	1	
991	K84676A	Linkage Assembly, [TH440-T4 / 4T60E] (Internal) (13-3/4" Park Rod) L1990-Up	1	
991	K84676B	Linkage Assembly, [4T60E / 4T65E] (Internal) (15-1/2" Park Rod) 1991-E98	1	
991	K84676M	Linkage Assembly, [4T65E] (Internal) (15-1/2" Park Rod) L1998-Up	1	
991	84684	Rooster Comb Kit, [TH440-T4] (Internal) (With Link & Spring) 1983-91	1	8646958
991	84684A	Rooster Comb Kit, [4T60E / 4T65E] (Internal) (With Link & Spring) 1991-E98	1	8668991
991	84892	Manual Shaft, [TH440-T4] (Goes Thru Case) (3.570" Long) 1983-87	1	
991	84892A	Manual Shaft, [TH440-T4] (Goes Thru Case) (3.830" Long) 1988-Up	1	
993	84617	Link Rod, [TH440-T4] (Rooster Comb to Manual Valve) 1983-Up	1	8649659
993	84617A	Link Rod, [4T60E] (Rooster Comb to Manual Valve) 1991-Up	1	
993	84617M	Link Rod, [4T65E] (Rooster Comb to Manual Valve) 1997-Up	1	
994	84677	Park Rod, [TH440-T4] (13-1/4"Long) (.365"OD of Tip) 1983-91	1	8675223
994	84677A	Park Rod, [TH440-T4 / 4T60E] (13-3/4"Long) (.440"OD of Tip) 1984-91	1	
994	84677B	Park Rod, [4T60E / 4T65E] (15-1/2"Long) (.440"OD of Tip) 1991-Up	1	8675335
996	84844	Fitting, [TH440-T4] (Cooler Line) (Lower) (Short One) (Fits Small Line) 1983-91	1	8656675
996	84845	Fitting, [TH440-T4] (Cooler Line) (Upper) (With Check Ball) (Long One) (Fits Small Line) 1983-91	1	24207294
996	84845A	Fitting, [4T60E] (Cooler Line) (Upper) (With Check Ball) (Long One) (Fits Large Line) 91-Up	1	24202550
996	84845B	Fitting, [4T60E / 4T65E] (Cooler Line) (Upper) (No Check Ball) (Long One) 1991-99	1	
996	84844A	Fitting, [TH440-T4] (Cooler Line) (Lower) (No Check Ball) (Short One) (Fits Small Line) 83-91	1	
996	84845C	Fitting, [4T60E / 4T65E] (Cooler Line) (Lower) (No Check Ball) (Short One) 1991-99	1	
996	84845D	Fitting, [4T65E] (Cooler Line) (Upper) (5/16" Line W/ Check Ball) (Long One) (Snap-in Line) (9/16" x 18 UNF) 2000-03	1	
996	34280A	Fitting, [4T65E] (Cooler Line) (Lower) (5/16" Line) (Short One) (Snap-in Line) (9/16" x 18 UNF) 2000-03	1	
996	84845E	Fitting, [4T65E] (Cooler Line) (Lower) (Short One) (Snap-in Line) (3/8" x 18 NPS) (Aluminum) 2004-Up	1	
996	84845F	Fitting, [4T65E] (Cooler Line) (Upper) (Long One) (Snap-in Line) (Without Check Ball) (Aluminum) 2004-Up	1	
997	84685	Lever & Bracket Assembly, [TH440-T4] (Throttle) 1983-91	1	
997	84933	Link, [TH440-T4] (Throttle Cable to Throttle Lever) 1983-91	1	8656072
998	84679	Pipe, [TH440-T4] (2-3 Manuever With Plate) 1987-91	1	8662842
998	84679A	Pipe, [TH440-T4] (2nd Clutch Signal) (on Valve Body)	1	8656071
999	K84679B	Tubes, [TH440-T4 / 4T60E / 4T65E] (1-2 Servo) 1983-Up	1	
999	84532-01K	Retainer, [4T60E / 4T65E] (Differential Lube Tube)	1	Sonnax

4T80E

FWD 4 Speed

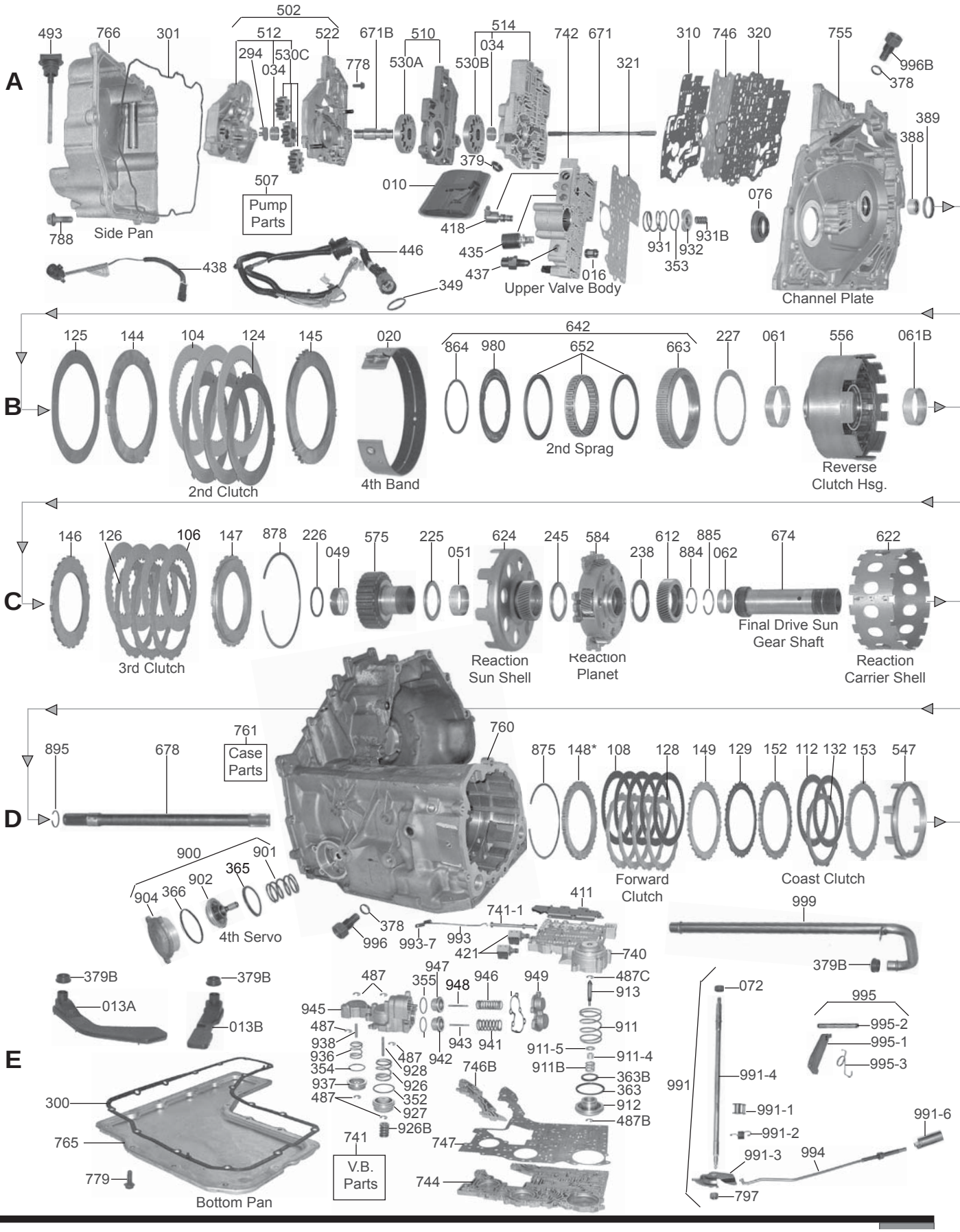

FWD 4 Speed

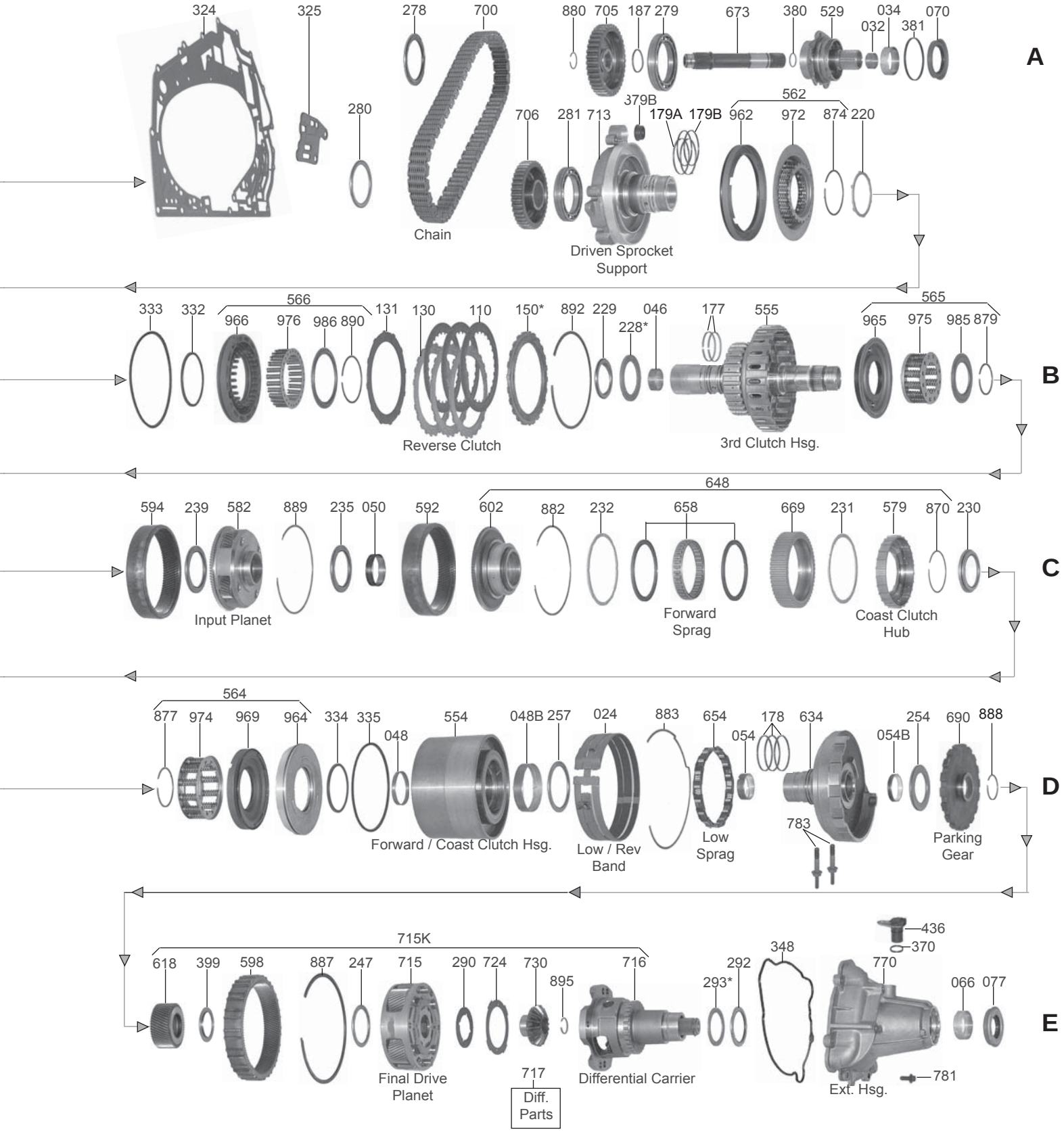
A
324
325
278
700
880
705
187
279
673
380
529
034
070
032
381
280
706
281
713
379B
179A
179B
562
962
972
874
220
Chain
Driven Sprocket Support
B
333
332
566
966
976
986
890
131
130
110
150*
892
229
228*
046
177
555
565
965
975
985
879
Reverse Clutch
3rd Clutch Hsg.
C
594
239
582
889
235
050
592
648
602
882
232
658
669
231
579
870
230
Input Planet
Forward Sprag
Coast Clutch Hub
D
564
877
974
969
964
334
335
048
554
048B
257
024
883
654
054
178
634
054B
254
690
888
Forward / Coast Clutch Hsg.
Low / Rev Band
Low Sprag
783
Parking Gear
E
715K
618
399
598
887
247
715
290
724
730
895
716
436
370
348
292
293*
770
066
077
781
Final Drive Planet
717
Diff. Parts
Differential Carrier
Ext. Hsg.

4T80E

ILL#	PART#	DESCRIPTION	QTY	REF #
		OVERHAUL KIT		
	K72900T	Overhaul Kit, [4T80E] (With Bonded Valve Body Plates)	1	
	K72900	Overhaul Kit, [4T80E] (Without Bonded Clutch Pistons) (Without Bonded Valve Body Plate) 1993-06	1	
		BONDED PISTON KIT		
	K72940	Bonded Clutch Piston Kit, [4T80E] 1995-Up (Contains: 2nd Clutch 1995-Up / 3rd Clutch & Coast Clutch 1993-Up) **(*Sell 72886 for 2nd Clutch 1993-94)**	1	
		MASTER L/STEEL KIT		
	DK7200-S	Master L/Steels, [4T80E] (Without Bonded Clutch Pistons) (With Bonded Valve Body Plate) 93-94	1	
	DK7200A-S	Master L/Steels, [4T80E] (Without Bonded Clutch Pistons) (With Bonded Valve Body Plate) 95-02	1	
	DK7200B-S	Master L/Steels, [4T80E] (Without Bonded Clutch Pistons) (With Bonded Valve Body Plate) 03-Up	1	
		MASTER W/STEEL KIT		
	DK7200	Master W/Steels, [4T80E] (Without Bonded Clutch Pistons) (With Bonded Valve Body Plate) 1993-94	1	
	DK7200A	Master W/Steels, [4T80E] (Without Bonded Clutch Pistons) (With Bonded Valve Body Plate) 1995-02	1	
	DK7200B	Master W/Steels, [4T80E] (Without Bonded Clutch Pistons) (With Bonded Valve Body Plate) 2003-Up	1	
		FILTER		
010	72710	Filter, [4T80E] (Oil) (Main) (Under Side Cover) 1993-Up	1	
013A	72711	Filter, [4T80E] (Left Scavenger) 1993-Up (Angled Filter)	1	
013B	72712	Filter, [4T80E] (Right Scavenger) 1993-Up (Straight Filter)	1	
	72713	Filter, (Pressure Control Solenoid) (In Valve Body)	1	8680389
	72713R	Retainer, (*For 72713)	1	24205848
	35712	Screen, [4T80E] (Pump Pressure) (In Valve Body)	1	12338044
		BANDS		
020	72700	Band, [4T80E] (Overdrive) (Front, Flex) 1993-Up	1	8684246
024	72701	Band, [4T80E] (Low / Reverse) (Rear, Double Wrap) 1993-Up	1	24204502
		BUSHINGS		
	K72901	Bushing Kit, [4T80E] 1993-Up	1	
031	72005	Bushing, [4T80E] (Converter Hub) (Presses in Converter Reactor) 1993-Up	2	
034	72901-01	Bushing, [4T80E] (Pump Body) (Secondary & Scavenger) 1993-Up (Pkg of 2ea)	2	Sonnax
032	72001	Bushing, [4T80E] (Converter Reactor) (Inner) 1993-Up	1	
	72023	Bushing, [4T80E] (Driven Sprocket Support) 1993-Up	1	
046	72009	Bushing, [4T80E] (3rd Clutch Housing) 1993-Up	1	
048	72011A	Bushing, [4T80E] (Forward / Coast Clutch Housing) (Front, Small) 1993-Up	1	
048B	72011B	Bushing, [4T80E] (Forward / Coast Clutch Housing) (Rear, Large) 1993-Up	1	
049	72013	Bushing, [4T80E] (3rd Clutch Hub) 1993-Up	1	
050	72014	Bushing, [4T80E] (Input Planet Hub) 1993-Up	1	
051	72019	Bushing, [4T80E] (Reaction Sun Shell) 1993-Up	1	
054	72007A	Bushing, [4T80E] (Forward / Coast Clutch Support) (Front, Small) 1993-Up	1	
054B	72007B	Bushing, [4T80E] (Forward / Coast Clutch Support) (Rear, Large) 1993-Up	1	
061	72009A	Bushing, [4T80E] (Reverse Clutch Housing) (Front, Large) 1993-Up	1	

061B	72009B	Bushing, [4T80E] (Reverse Clutch Housing) (Rear, Small) 1993-Up	1	
062	72021	Bushing, [4T80E] (Final Drive Shaft) 1993-Up	1	
066	72020	Bushing, [4T80E] (Extension Housing) 1993-Up	1	
		METAL CLAD SEALS		
070	72151	Seal, [4T80E] (Converter Reactor) 1993-Up	1	8677749
072	84511	Seal, [4T80E] (Manual Lever Shaft) 1993-Up	1	8644709
076	72153	Seal, [4T80E] (Axle) (Left) (Case Cover / Channel Plate) 1993-Up	1	8679679
077	72152	Seal, [4T80E] (Axle) (Right) (Extension Housing) 1993-Up	1	8677554
		FRICTION CLUTCH		
104	72102	Friction, [4T80E] (2nd Clutch) (.081") (54 Teeth) 1993-94	3	8681371
104	72102A	Friction, [4T80E] (2nd Clutch) (.071") (54 Teeth) 1995-Up	4	24201546
106	72104	Friction, [4T80E] (3rd Clutch) (.081") (26 Teeth) 1993-Up	4	8684832
108	72100	Friction, [4T80E] (Forward Clutch) (.081") (53 Teeth) 1993-Up	5	24206898
110	72106	Friction, [4T80E] (Reverse Clutch) (.081") (26 Teeth) 1993-Up	3	24206897
112	72108	Friction, [4T80E] (Coast Clutch) (.081") (51 Teeth) 1993-94	2	8677829
112	72108A	Friction, [4T80E] (Coast Clutch) (.081") (53 Teeth) 1995-Up	2	24224013
	K72100	Friction Module, [4T80E] 1993-94	1	
	K72100A	Friction Module, [4T80E] 1995-Up	1	
		STEEL CLUTCH		
124	72103	Steel, [4T80E] (2nd Clutch) (.091") (5 Teeth) 1993-94	2-4	8681834
124	72103A	Steel, [4T80E] (2nd Clutch) (.081") (5 Teeth) 1995-Up	2-4	8684721
125	72103B	Steel, [4T80E] (2nd Clutch) (.042") (Waved) 1993-94	1	
126	72105	Steel, [4T80E] (3rd Clutch) (.091") (22 Teeth) 1993-Up	3	8677612
128	72101	Steel, [4T80E] (Forward Clutch) (.077") (16 Teeth) 1993-Up	4	8679584
129	72101A	Steel, [4T80E] (Forward Clutch) (.063") (16 Teeth) (Dished) 1993-Up	1	8684654
130	72107	Steel, [4T80E] (Reverse Clutch) (.091") (22 Teeth) 1993-Up	3	8677615
131	72107A	Steel, [4T80E] (Reverse Clutch) (.071") (12 Teeth) (Dished) 1993-Up	1	
132	72109	Steel, [4T80E] (Coast Clutch) (.123") (8 Teeth) 1993-Up	1	8677808
	K72110	Steel Module, [4T80E] 1993-94	1	
	K72110A	Steel Module, [4T80E] 1995-Up	1	
		CLUTCH PRESSURE PLATES		
144	72130	Apply Plate, [4T80E] (2nd Clutch) (.177") (5 Teeth) 1993-Up	1	8681833
145	72133	Pressure Plate, [4T80E] (2nd Clutch) (.265") (5 Teeth) 1993-Up	1	8677614
146	72132	Apply Plate, [4T80E] (3rd Clutch) (.141") (22 Teeth) 1993-Up	1	8677613
147	72135	Pressure Plate, [4T80E] (3rd Clutch) (.159") (22 Teeth) (# 2) 1993-Up	1	8678722
148	72131C	Pressure Plate, [4T80E] (Forward Clutch) (.310") (16 Teeth) (Stamped C) 1993-Up	1	
148	72131D	Pressure Plate, [4T80E] (Forward Clutch) (.320") (16 Teeth) (Stamped D) 1993-Up	1	
149	72138	Apply Plate, [4T80E] (Forward Clutch) (.159") (16-Notched Teeth) 1993-Up	1	8680622
150	72137A	Pressure Plate, [4T80E] (Reverse Clutch) (.194") (24 Teeth) (Stamped B) 1993-Up	1	
152	72139	Pressure Plate, [4T80E] (Coast Clutch) (.159") (16-Notched Teeth) 1993-Up	1	8684653
153	72136	Apply Plate, [4T80E] (Coast Clutch) (.207") (8-Notched Teeth) 1993-Up	1	8679837
		OIL SEALING RINGS		
	K72903	Ring Kit, [4T80E] 1993-Up	1	
177	84307	Ring, [4T80E] (Input Shaft) (3rd Clutch) (Solid) (Teflon) 1993-Up	2	8656342
178	72303	Ring, [4T80E] (Forward / Coast Clutch) (Lap Joint) (Teflon) 1993-Up	3	8679587
179A	72301	Ring, [4T80E] (2nd Clutch) (Vespel) 1993-Up	2	8678235

4T80E

179B	72300A	Ring, [4T80E] (2nd Clutch) (Quad) (Rubber Expander) 1993-Up	2	8678234
187	72304	Ring, [4T80E] (Drive Sprocket) (Teflon) 1993-Up	1	8679881
		WASHERS & BEARINGS		
	K72907	Washer Kit, [4T80E] 1993-Up	1	
	K72906	Bearing Kit, [4T80E] 1993-Up	1	
220	72401	Washer, [4T80E] (Driven Sprocket Support to Reverse Clutch Housing) (6-Tab) (Plastic) 1993-Up	1	8679618
225	72415	Bearing, [4T80E] (3rd Clutch Hub to Sun Shell) 1993-Up	1	8677884
226	72402	Washer, [4T80E] (3rd Clutch Housing to 3rd Clutch Hub) (Plastic) 1993-Up	1	8678721
227	72403	Washer, [4T80E] (Reverse Clutch Housing to 2nd Sprag) (4-Tab) (Plastic) 1993-Up	1	8678725
228	72404A	Washer, [4T80E] (Reverse Clutch Housing to 3rd Clutch Housing) (2.27-2.49mm) (3-Tab) (Plastic) 1993-Up	1	
228	72404B	Washer, [4T80E] (Reverse Clutch Housing to 3rd Clutch Housing) (2.58-2.80mm) (3-Tab) (Plastic) 1993-Up	1	
228	72404C	Washer, [4T80E] (Reverse Clutch Housing to 3rd Clutch Housing) (2.89-3.11mm) (3-Tab) (Plastic) 1993-Up	1	
228	72404D	Washer, [4T80E] (Reverse Clutch Housing to 3rd Clutch Housing) (3.20-3.42mm) (3-Tab) (Plastic) 1993-Up	1	
228	72404E	Washer, [4T80E] (Reverse Clutch Housing to 3rd Clutch Housing) (3.51-3.73mm) (3-Tab) (Plastic) 1993-Up	1	
228	72404F	Washer, [4T80E] (Reverse Clutch Housing to 3rd Clutch Housing) (3.82-4.04mm) (3-Tab) (Plastic) 1993-Up	1	
228	72404G	Washer, [4T80E] (Reverse Clutch Housing to 3rd Clutch Housing) (4.13-4.35mm) (3-Tab) (Plastic) 1993-Up	1	
228	72404H	Washer, [4T80E] (Reverse Clutch Housing to 3rd Clutch Housing) (4.44-4.66mm) (3-Tab) (Plastic) 1993-Up	1	
228	72404J	Washer, [4T80E] (Reverse Clutch Housing to 3rd Clutch Housing) (4.75-4.97mm) (3-Tab) (Plastic) 1993-Up	1	
229	72416	Bearing, [4T80E] (Driven Sprocket Support to 3rd Clutch Housing) 1993-Up	1	8677886
230	72417	Bearing, [4T80E] (Coast Clutch Hub to Forward / Coast Clutch Housing) 1993-Up	1	
231	72405	Washer, [4T80E] (Forward Sprag Outer Race to Coast Clutch Hub) (4-Tab) (Plastic) 1993-Up	1	
232	72406	Washer, [4T80E] (Input Sprag Outer Race to Forward Sprag Outer Race) (4-Tab) (Plastic) 93-Up	1	
235	65408A	Bearing, [4T80E] (Input Planet to Input Planet Hub) 1993-Up	1	8678189
238	35407	Bearing, [4T80E] (Reaction Planet to Input Sun Gear) 1993-Up	1	9436851
239	35407	Bearing, [4T80E] (Input Sun Gear to Input Planet) (Stays in Planet) 1993-Up	1	9436851
245	72421	Bearing, [4T80E] (Sun Shell to Reaction Planet) (Stays in Planet) 1993-Up	1	
247	72422	Bearing, [4T80E] (Final Drive Sun Gear to Final Drive Planet) (Stays in Planet) 1993-Up	1	
254	84404	Bearing, [4T80E] (Forward / Coast Clutch Support to Park Gear) 1993-Up	1	8646504
257	72424	Bearing, [4T80E] (Forward / Coast Clutch Housing to Forward / Coast Clutch Support) 1993-Up	1	8678211
278	35407	Bearing, [4T80E] (Channel Plate to Drive Sprocket) 1993-Up	1	9436851
279	72426	Ball Bearing, [4T80E] (Drive Sprocket to Converter Reactor) 1993-Up	1	8677841
280	72427	Bearing, [4T80E] (Channel Plate to Driven Sprocket) 1993-96	1	24203059
280	72428	Bearing, [4T80E] (Channel Plate to Driven Sprocket) 1997-99	1	8638118
281	72429	Ball Bearing, [4T80E] (Driven Sprocket to Support) 1993-Up	1	8677841
290	74442	Race, [4T80E] (Final Drive Carrier to Pinion) (With 4-Notches & Holes) 1993-Up	1	
292	35407	Bearing, [4T80E] (Differential to Extension Housing) 1993-Up	1	9436851
293	72441A	Race, [4T80E] (Differential to Extension Housing) (2.65 - 2.77mm) 1993-Up	1	
293	72441B	Race, [4T80E] (Differential to Extension Housing) (2.79 - 2.90mm) 1993-Up	1	
293	72441C	Race, [4T80E] (Differential to Extension Housing) (2.93 - 3.04mm) 1993-Up	1	
293	72441D	Race, [4T80E] (Differential to Extension Housing) (3.07 - 3.18mm) 1993-Up	1	

293	72441E	Race, [4T80E] (Differential to Extension Housing) (3.21 - 3.32mm) 1993-Up	1	
293	72441F	Race, [4T80E] (Differential to Extension Housing) (3.35 - 3.46mm) 1993-Up	1	
293	72441G	Race, [4T80E] (Differential to Extension Housing) (3.49 - 3.59mm) 1993-Up	1	
294	72407	Washer, [4T80E] (Scavenge Pump Body to Driven Pump Shaft) 1993-Up	1	
		GASKETS & RUBBER COMPONENTS		
300	72500	Gasket, [4T80E] (Bottom Pan) (Cork) 1993-Up	1	
300	72500M	Gasket, [4T80E] (Bottom Pan) (Bonded Rubber) 1993-Up	1	8681197
301	72549	Gasket, [4T80E] (Side Pan) (Molded Rubber) 1993-Up	1	8679392
348	72548	Gasket, [4T80E] (Extension Housing) (Molded Rubber) 1993-Up	1	8679017
310	72528	Gasket, [4T80E] (Secondary Pump to Seperator Plate) 1993-Up	1	8678609
320	72526	Gasket, [4T80E] (Spacer Plate to Channel Plate) 1993-Up	1	8683788
321	72527	Gasket, [4T80E] (Upper Valve Body to Spacer Plate) 1993-Up	1	8684824
324	72531	Gasket, [4T80E] (Channel Plate to Case) (Outer) (Bonded) 1993-Up	1	24208778
325	72532A	Gasket, [4T80E] (Channel Plate to Support) (Inner) (Bonded) 1995-Up	1	24208779
332	72554	Lip Seal, [4T80E] (Reverse Clutch Piston) (Inner) 1993-Up	1	8679008
333	72555	Lip Seal, [4T80E] (Reverse Clutch Piston) (Outer) 1993-Up	1	8679007
334	72552	Lip Seal, [4T80E] (Forward Clutch Piston) (Inner) 1993-99	1	24214003
334	72552A	Lip Seal, [4T80E] (Forward Clutch Piston) (Inner) 2000-Up	1	
335	72553	Lip Seal, [4T80E] (Forward Clutch Piston) (Outer) 1993-Up	1	8677804
349	72544	O-Ring, [4T80E] (Case Connector) 1993-Up	1	8676430
353	72536	O-Ring, [4T80E] (2-3 Accumulator Piston) 1993-Up	1	8679543
365	72542	Lip Seal, [4T80E] (4th Servo Piston) 1993-Up	1	8679289
366	72539	O-Ring, [4T80E] (4th Servo Cover) 1993-Up	1	8679290
370	13583A	O-Ring, [4T80E] (Output Speed Sensor) 1993-Up	1	
378	72546	O-Ring, [4T80E] (Cooler Fitting) 1993-Up	2	8680235
379	72550	Boot, [4T80E] (Main Filter) (.295" Tall) 1993-Up	1	8678599
379B	72551	Boot, [4T80E] (Left & Right Scavenge Filter & Scavenge Tube) (.440" Tall) 1993-Up	2	8680504
380	96508	O-Ring, [4T80E] (Turbine Shaft) 1993-Up	1	8686052
381	72541	O-Ring, [4T80E] (Converter Reactor to Case) 1993-Up	1	8681100
389	72155	Seal, [4T80E] (Channel Plate to Drive Sprocket) (Small) 1993-Up	1	24201991
388	72154	Seal, [4T80E] (Channel Plate to Drive Sprocket) (Large) 1993-Up	1	24201942
399	72156	Seal, [4T80E] (Final Drive Sun Gear to Pinion Gear) 1993-Up	1	8678353
		TECHNICAL MANUALS		
	TM4T80-E	Tech Manual, [4T80E] 1993-Up	1	ATSG
		ELECTRICAL COMPONENTS		
410	72947	Switch, [4T80E] (Neutral Safety) (No Wire Harness) (External 6-Prong Connector)	1	12450158
411	72951	Switch, [4T80E] (Manifold Pressure) (3-Prong) 1993-99	1	24200770
411	72951A	Switch, [4T80E] (Manifold Pressure) (2-Prong) 2000-Up	1	24209545
418	77942	Solenoid, [4T80E] (TCC) (Lock-Up) 1993-Up	1	24212690
421	72943	Solenoid, [4T80E] (1-2 & 2-3 Shift) (1-2 / 1993-Up) (2-3 / 1993-99)	2	24207662
421	72945	Solenoid, [4T80E] (2-3 Shift) 2000-Up	1	24207384
421	K72943	Solenoid Kit, [4T80E] (1-2 & 2-3 Shift) (Both Solenoids & Bracket) (2-3 / 1993-99)	1	24211355
435	34605A	Solenoid, [4T80E] (Pressure Control) (Force Motor) 1993-03 (Has 2-Flat Blades on Ends of Solenoid)	1	24220158
435	34605D	Solenoid, [4T80E] (Pressure Control) (Force Motor) 2004-Up	1	24225320
435	4L6-SOL	Repair Kit, [4T80E] (Force Motor / EPC Solenoid) 1992-03 (*With Tool Kit) (Fixes 4-Solenoids)	1	Transgo
435	4L6-SOL-4	Repair Kit Refills, [4L80E] (Force Motor / EPC Solenoid) 1992-02 (*Without Tool Kit) (Fixes 4-Solenoids)	1	4L6-SOL-4

4T80E

436	72955	Sensor, [4T80E] (Output Speed) 1993-Up	1	24204319
437	72953	Sensor, [4T80E] (Temperature) 1993-Up	1	8678854
438	72954	Sensor, [4T80E] (Input Speed) (With 14" Wire Harness) 1993- 4/21/96	1	24209654
438	72954A	Sensor, [4T80E] (Input Speed) (With 9-1/2" Wire Harness) 4/22/96-Up	1	24207491
446	72956	Wire Harness, [4T80E] (Internal / External) (With 2-Internal Connectors) (1-With 8-Prongs, 1-With 6-Prongs) 1993 Only*	1	12143262
446	72956A	Wire Harness, [4T80E] (Internal / External) (14-Prong) (1-With 3-Prongs & 6-With 2-Prongs Internal Connectors) (Pass Through Case Connector is 1.560"OD) 1994-96	1	12143281
446	72956B	Wire Harness, [4T80E] (Internal / External) (14-Prong) (1-With 3-Prongs & 6-With 2-Prongs Internal Connectors) (Pass Through Case Connector is 1.430"OD) 1997-99	1	15303097
446	72956C	Wire Harness, [4T80E] (Internal / External) 2000-03	1	24241208
446	72956D	Wire Harness Extension, [4T80E] **(*Use With 72956C)** 2000-03	1	15320478
446	72956E	Wire Harness, [4T80E] (Internal / External) 2004-Up	1	24226755
446	72956F	Wire Harness Extension, [4T80E] **(*Use With 72956E)** 2004-Up	1	24224542
		HARD PARTS		
502	72912	Pump, [4T80E] (Scavenge With Cover) (Aluminum) 1993-99	1	8684303
510	72916	Body, [4T80E] (Primary Pump) (Cast Iron) 1993-99	1	8684949
514	72916A	Body, [4T80E] (Secondary Pump) (Aluminum) (With Pressure Regulator Valve) 1993-99	1	8684950
529	72842	Converter Reactor, [4T80E] (Drive Sprocket Support) 1993-Up	1	8681071
547	72721	Apply Ring, [4T80E] (Forward Clutch) (Aluminum) (1.150" Thick) (8-Legs) 1993-Up	1	8682665
554	72811	Drum, [4T80E] (Forward / Coast Clutch) 1993-Up	1	8682878
555	72835	Drum, [4T80E] (3rd Clutch) 1993-Up	1	8682114
556	72829	Drum, [4T80E] (Reverse Cutch) (Less Sprag) (From Top of Snap Ring Groove to Top Edge of Drum Measures .180") 1993-97	1	8684006
556	72829A	Drum, [4T80E] (Reverse Cutch) (Less Sprag) (From Top of Snap Ring Groove to Top Edge of Drum Measures .360") 1998-Up	1	24212654
564	K72888	Piston Kit, [4T80E] (Forward & Coast Clutch) (Aluminum Forward and Bonded Coast Piston) 1993-Up	1-2	
575	72841	Hub, [4T80E] (3rd Clutch) 1993-Up	1	8678084
579	72843	Hub, [4T80E] (Coast Clutch) (26 Outer Teeth) (With 4-Holes For Washer) 1993-Up	1	
582	72731	Planet, [4T80E] (Input) 1993-Up	1	
584	72747	Planet, [4T80E] (Reaction) 1993-Up	1	8681884
592	72732	Ring Gear, [4T80E] (Input Planet) 1993-Up	1	
594	72732	Ring Gear, [4T80E] (Reaction Planet) 1993-Up	1	
598	72881	Ring Gear, 4T80E (Final Drive Planet) (114 Teeth) 1993-Up	1	8677862
602	72733	Hub, [4T80E] (Input Planet Ring Gear) (With Inner Race) 1993-Up	1	
612	72746	Sun Gear, [4T80E] (Input Planet) (50 Teeth) 1993-Up	1	8678076
618	72884	Sun Gear, [4T80E] (Final Drive Planet) (42 Tooth) 1993-Up	1	8678825
618	72884A	Sun Gear, [4T80E] (Final Drive Planet) (46 Tooth) 1993-Up	1	8679852
618	72884B	Sun Gear, [4T80E] (Final Drive Planet) (54 Tooth) 1993-Up	1	8683806
622	72745	Shell, [4T80E] (Reaction Planet) 1993-Up	1	8678075
624	72730	Sun Shell, [4T80E] (Reaction With 46 Tooth Sun Gear) (With 8-Holes) 1993-Up	1	8678083
634	72845	Support, [4T80E] (Forward / Coast Clutch Drum) 1993-Up	1	8682237
648	K72721	Sprag Assembly, [4T80E] (Forward) (36-Lugs) 1993-Up (Contains: # 602, 882, 232, 658, 669, 231, 579, 870)	1	
652	72720	Sprag, [4T80E] (Intermediate / 2nd) (16-Lugs) (With Side Washers) 1993-Up	1	8686053
654	72722	Roller Clutch, [4T80E] (Low Roller) (18-Roller, With Plastic Cage) 1993-Up	1	7471004
658	72721	Sprag, [4T80E] (Forward) (36-Lugs) (With Side Washers) 1993-Up	1	
663	72941	Outer Race, [4T80E] (2nd Sprag) (For 16-Lug Sprag) (1" Thick) (With 6-Holes) 1993-Up	1	24201548
669	72941A	Outer Race, [4T80E] (Forward Sprag) (For 36-Lug Sprag) (1.125" Thick) (With 2-Holes) 1993-Up	1	

671	72874	Shaft, [4T80E] (Pump Drive) 1993-Up	1	8679883
671B	72875	Shaft, [4T80E] (Pump Driven) 1993-Up	1	8685142
673	72859	Shaft, [4T80E] (Turbine) (7" Long) 1993-Up	1	24207022
674	72950	Shaft, [4T80E] (Final Drive Sun Gear) 1993-Up	1	8678124
678	72737	Shaft, [4T80E] (Output) (20" Long) (1.380"OD Bushing Surface) 1993-Up	1	8677017
690	72894	Gear, [4T80E] (Parking Gear) 1993-Up	1	8677214
700	72885	Chain, [4T80E] (Drive) (7/8" Wide) 1993-E94	1	
700	72885A	Chain, [4T80E] (Drive) (1" Wide) L1994-Up	1	
705	72830	Sprocket, [4T80E] (Drive) (3/4" Wide) (39 Tooth) 1993-94	1	
705	72830A	Sprocket, [4T80E] (Drive) (7/8" Wide) (39 Tooth) 1993-Up	1	
706	72831	Sprocket, [4T80E] (Driven) (3/4" Wide) (39 Tooth) 1993-94	1	
706	72831A	Sprocket, [4T80E] (Driven) (7/8" Wide) (39 Tooth) 1993-Up	1	
713	72870	Support, [4T80E] (Driven Sprocket) (Cast # 8683160) 1993-94	1	8683149
713	72870A	Support, [4T80E] (Driven Sprocket) (Cast # 24206734 or 24201538) 1995-Up	1	24201535
715	72890	Final Drive Planet, [4T80E] (42 Tooth Sun Gear) (36 Tooth Pinions) 1993-Up	1	
715	K72890	Final Drive Assembly, [4T80E] (42 Tooth Sun Gear) (Includes: #618 to #716) 1993-Up	1	
715	72890A	Final Drive Planet, [4T80E] (46 Tooth Sun Gear) 1993-Up	1	
715	K72890A	Final Drive Assembly, [4T80E] (46 Tooth Sun Gear) (Includes: #618 to #716) 1993-Up	1	
715	72890B	Final Drive Planet, [4T80E] (54 Tooth Sun Gear) 1993-Up	1	
715	K72890B	Final Drive Assembly, [4T80E] (54 Tooth Sun Gear) (Includes: #618 to #716) 1993-Up	1	
716	72880	Differential Carrier, [4T80E] (Less Pinion Gear) 1993-Up	1	
		VALVE BODIES (REBUILT)		
740	GM-4636	Valve Body, [4T80E] (Lower) 1993-Up	1	
740	GM-4637	Valve Body, [4T80E] (Upper) 1993-Up	1	
		VALVE BODIES		
740	72892	Valve Body, [4T80E] (Lower) (Bottom Pan) (Cast # 24200442) 1993-Up	1	
		VALVE BODY COMPONENTS		
741	72678	Clip, [4T80E] (Holds Manual Link) (Plastic) 1993-Up	1	24229611
741	72683	Manual Link Assembly, [4T80E] (Valve, Link, & Clip) 1993-Up	1	
	72854-03K	Valve & Sleeve, [4T80E] (Converter Regulator Valve, Sleeve, Springs, Washer, & End Plug) **(*Must Use 72854-TL2)**	1	Sonnax
	72854-TL2	Reamers, [4T80E] (*For 72854-03K)	1	Sonnax
	74854-01K	Valve & Sleeve Assembly, [4T80E] (Actuator Limit Valve) (Contains: Valve, Sleeve, 2-Springs & Retaining Clip) **(*Must Use 72854-TL)**	1	Sonnax
	72854-TL	Reamer, [4T80E] (*For 74854-01K)	1	Sonnax
	72754-01K	Boost Valve Kit, [4T80E] (Valve & Sleeve) 1993-Up	1	Sonnax
	72754-03K	Valve Kit, [4T80E] (Oversized PR & Boost Valve) (Includes: 1-PR Valve, 1-Boost Valve, 1-Spring) **(*Requires Tools F-72754-TL3 & VB-FIX)**	1	Sonnax
		HARD PARTS (Continued)		
742	72891	Valve Body, [4T80E] (Upper) (Side Pan) (With 2-3 Accumulator Assy) (Cast # 8684821) 1993-98	1	24210640
744	72758	Plate, [4T80E] (Lower Valve Body Channel) (Cast # 24200434) 1993-Up	1	
746	72876	Plate, [4T80E] (Upper Valve Body Separator) (Stamped # 83760) 1993-Up	1	
746B	72758A	Plate, [4T80E] (Lower Oil Transfer) (Cast # 8679437) 1993-Up	1	8679437
747	72529	Seperator Plate, [4T80E] (Lower Valve Body) (No Stamp) 1993	1	8685152
747	72529A	Seperator Plate, [4T80E] (Lower Valve Body) (With Bonded Gaskets) 1994	1	24201193
747	72529B	Seperator Plate, [4T80E] (Lower Valve Body) (With Bonded Gaskets) (Code 5347 or 3957) 94-02	1	24205347

4T80E

747	72529C	Seperator Plate, [4T80E] (Lower Valve Body) (With Bonded Gaskets) (Code 5286) 2003-Up	1	
755	72757	Channel Plate, [4T80E] (Case Cover) (Cast # 8684818)	1	
755	72757A	Channel Plate, [4T80E] (Case Cover) (Cast # 24200293)	1	
755	72757B	Channel Plate, [4T80E] (Case Cover) (Cast # 8682149)	1	
760	72702	Case, [4T80E] (Cast # 8685109) 1993-94	1	24210376
760	72702A	Case, [4T80E] (Cast # 8685564) (1.576"ID Case Connector Hole) 1995-99	1	24206983
760	72702B	Case, [4T80E] (Cast # 8683748) 1997	1	24200291
760	72702C	Case, [4T80E] (Cast # 8685564) (1.438"ID Case Connector Hole) 1997-Up	1	24210377
765	72801	Pan, [4T80E] (Bottom) 1993-Up	1	8681485
766	72805	Pan, [4T80E] (Side) 1993-98	1	8684342
766	72805A	Pan, [4T80E] (Side) 1999-Up	1	24207464
770	72205	Extension Housing, [4T80E] (7-1/4" Long) (Cast # 8683545) 1993-Up	1	8683544
	K72928	Snap Ring Kit, [4T80E] 1993-Up	1	
864	72600	Snap Ring, [4T80E] (Holds 2nd Sprag to Reverse Drum) **(*Spiral, Not Reusable)** 1993-Up	1	8678726
870	72601	Snap Ring, [4T80E] (Holds Coast Clutch Hub to Input Hub) 1993-Up	1	
874	72602	Snap Ring, [4T80E] (Holds 2nd Clutch Retainer to Support) 1993-Up	1	8678230
875	72603	Snap Ring, [4T80E] (Holds Forward Clutch Pressure Plate in Drum) (.077") 1993-Up	1	8678880
877	72604	Snap Ring, [4T80E] (Holds Forward Clutch Retainer in Drum) 1993-Up	1	8678877
878	72605	Snap Ring, [4T80E] (Holds 3rd Clutch Pressure Plate in Drum) (.076") 1993-Up	1	8683742
879	72606	Snap Ring, [4T80E] (Holds 3rd Clutch Retainer in Drum) 1993-Up	1	8678777
880	72607	Snap Ring, [4T80E] (Holds Drive Sprocket to Turbine Shaft) 1993-Up	1	8685114
882	72608	Snap Ring, [4T80E] (Holds Input Hub to Input Ring Gear) 1993-Up	1	8677619
883	72609	Snap Ring, [4T80E] (Holds Forward/Coast Support to Case) 1993-Up	1	8680406
884	72611	Snap Ring, [4T80E] (Holds Input Sun Gear to 3rd Clutch Drum) 1993-Up	1	8678821
885	72612	Snap Ring, [4T80E] (Holds Final Drive Sun Gear Shaft to Input Planet) 1993-Up	1	8678181
887	72613	Snap Ring, [4T80E] (Holds Final Drive Ring Gear to Case) 1993-Up	1	8681080
888	72614	Snap Ring, [4T80E] (Holds Park Gear to Final Drive Shaft) 1993-Up	1	8678188
889	72608	Snap Ring, [4T80E] (Holds Reaction Ring Gear to Input Planet) 1993-Up	1	8677619
890	72615	Snap Ring, [4T80E] (Holds Reverse Clutch Retainer in Drum) 1993-Up	1	8678731
892	72605	Snap Ring, [4T80E] (Holds Reverse Clutch Pressure Plate in Drum) 1993-Up	1	8683742
895	72616	Snap Ring, [4T80E] (Holds Output shaft Front & Rear) 1993-Up	2	8685521
	72617	Snap Ring, [4T80E] (Holds 4th Servo Pin to Piston) 1993-Up	1	
900	K72895	Servo Assembly, [4T80E] (4th) 1993-Up	1	
911	72891	Spring, [4T80E] (Low / Reverse Servo) (Large Spring)	1	
911	72892	Spring, [4T80E] (Low / Reverse Servo Cushion) (Small Spring)	1	
926	72992A	Spring, [4T80E] (1-2 Accumulator) (Green) (Large One)	1	
931	72893	Spring, [4T80E] (2-3 Accumulator) (Large) 1993-Up	1	
931	72893A	Spring, [4T80E] (2-3 Accumulator) (Small) 1993-Up	1	
932	72871-01	Piston, 4T80E (2-3 Accumulator) 1994-Up **(*Not For 1993)**	1	Sonnax
936	72894	Spring, 4T80E (3-4 Accumulator) (Blue)	1	
937	72872-01	Piston, 4T80E (3-4 Accumulator) 1993-Up	1	Sonnax
945	72828	Accumulator Assembly, 4T80E (1-2 & 3-4 Forward & Reverse) 1993-Up	1	
962	72886	Piston, [4T80E] (2nd Clutch) (Bonded) (3/4" Wide, Double Wall, For 3-Clutches) 1993-94	1	24207753
962	72886A	Piston, [4T80E] (2nd Clutch) (Bonded) (1/2" Wide, Single Wall, For 4-Clutches) 1995-Up	1	
964	72882	Piston, [4T80E] (Forward Clutch) (Aluminum) 1993-Up	1	24205707
965	72887	Piston, [4T80E] (3rd Clutch) (Bonded) (With 2-Check Balls) 1993-Up	1	24207754

966	72889	Piston, [4T80E] (Reverse Clutch) (Aluminum) 1993-Up	1	8678822
969	72888	Piston, [4T80E] (Coast Clutch) (Bonded) 1993-Up	1	24207755
972	72930	Spring & Retainer, [4T80E] (2nd Clutch Return) 1993-Up	1	24201540
974	72931	Spring & Retainer, [4T80E] (Forward/Coast Clutch Return) (12-Springs) 1993-97	1	8684652
974	72931A	Spring & Retainer, [4T80E] (Forward/Coast Clutch Return) (20-Springs) 1998-99	1	24206276
975	72932	Spring & Retainer, [4T80E] (3rd Clutch Return) 1993-Up	1	8678775
976	72933	Spring & Retainer, [4T80E] (Reverse Clutch Return) 1993-Up	1	8682131
980	72554	Retainer, [4T80E] (2nd Sprag) 1993-Up	1	8678727
985	72930	Retainer, [4T80E] (3rd Clutch Spring) 1993-Up	1	8678776
986	72931	Retainer, [4T80E] (Reverse Clutch Spring) 1993-Up	1	8678773
991	K72676	Linkage Assembly, [4T80E] (Internal) 1993-Up	1	
991	K72676A	Linkage Assembly, [4T80E] (Internal) (15-3/4” Manual Shaft) 1995-Up	1	
995	K72678	Park Pawl Assembly, [4T80E] 1993-Up	1	
996	72281	Fitting, [4T80E] (Cooler Line) (With Stem) (Goes in Case) 1993-Up	1	
996	72280	Fitting, [4T80E] (Cooler Line) (Without Stem) (Goes in Channel Plate) 1993-Up	1	
999	72679	Tube, [4T80E] (Scavenge) 1993-Up	1	

TH700-R4/4L60E/4L65E

RWD 4 Speed

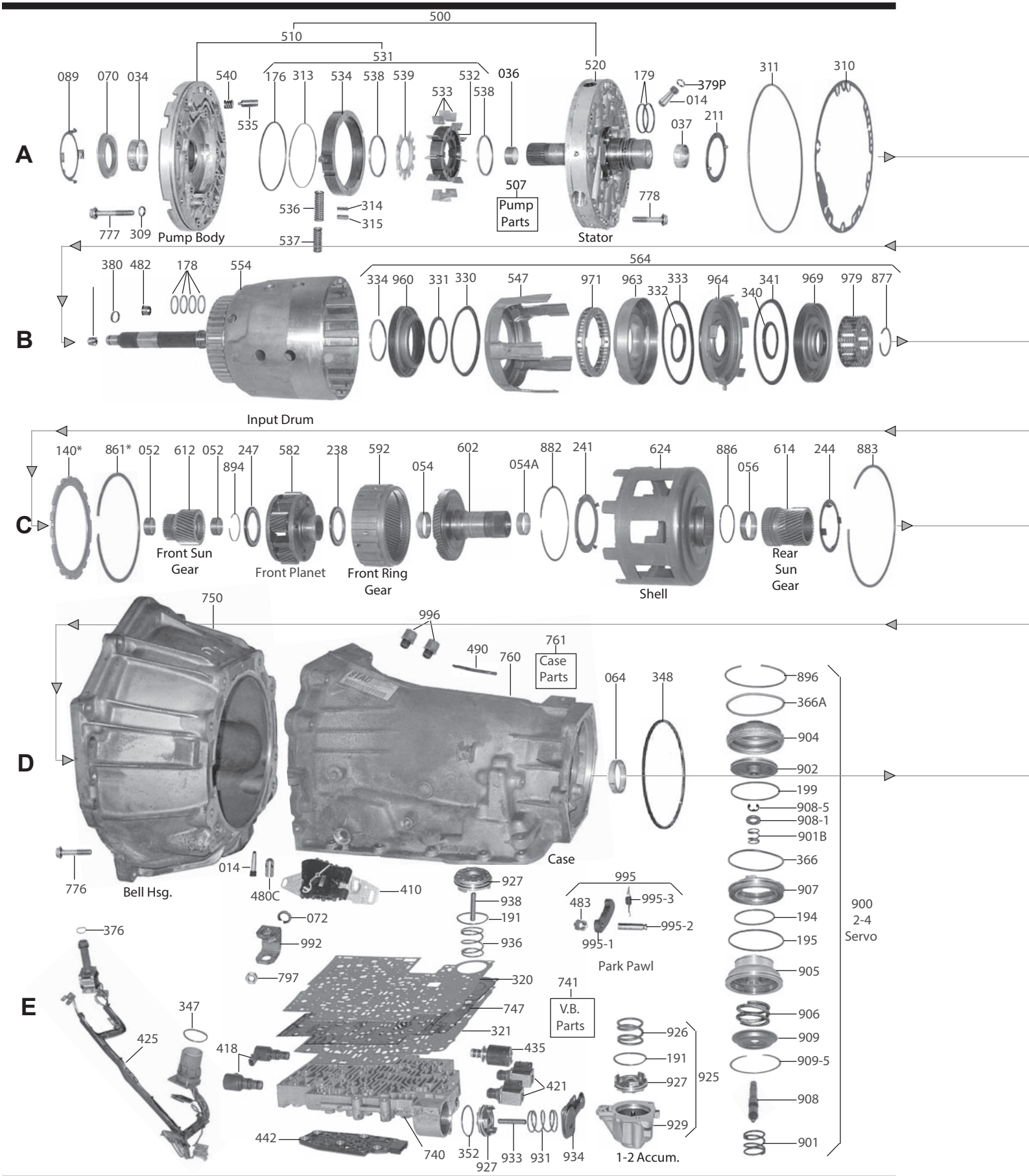

TH700-R4/4L60E/4L65E

RWD 4 Speed

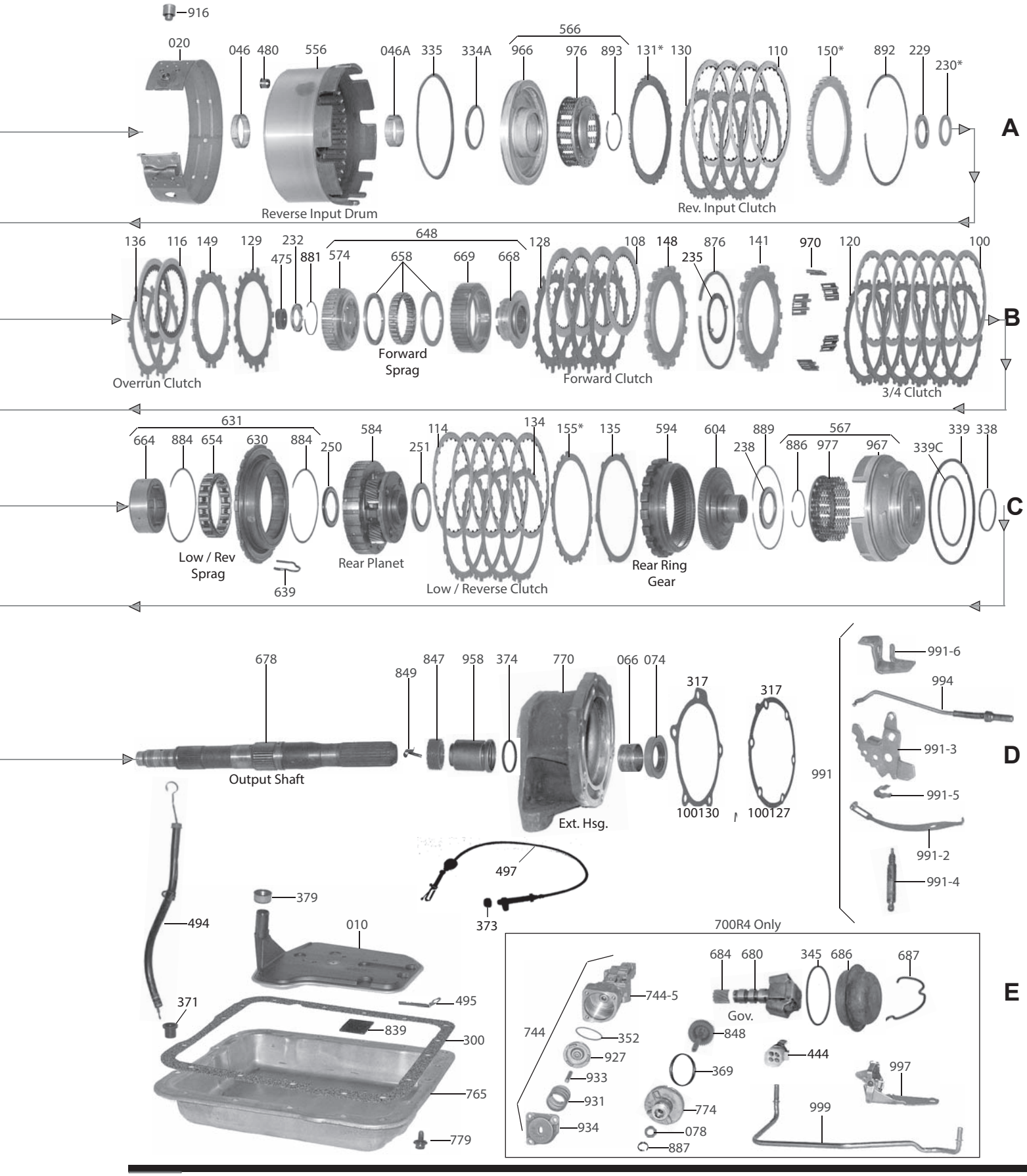

TH700-R4/4L60E/4L65E

ILL#	PART#	DESCRIPTION	QTY	REF #
		PAPER & RUBBER KIT		
	K77900C-1	Paper & Rubber Kit, [700R4 / 4L60] (Combo With 2-Sets of Valve Body Gaskets) 1982-93	1	
	K77900E-1	Paper & Rubber Kit, [4L60E] 1993-03	1	
		OVERHAUL KITS		
	K77900C	Overhaul Kit, [700R4 / 4L60] (Combo With 2-Sets of Valve Body Gaskets) 1982-93	1	
	K77900E	Overhaul Kit, [4L60E / 4L65E] (With Clutch Piston Lip Seals) 1993-03	1	
	K77900FP	Overhaul Kit, [4L60E / 4L65E] (With Bonded Clutch Pistons) 1997-03	1	
	K77900F	Overhaul Kit, [4L60E / 4L65E] (Without Bonded Clutch Pistons) 1997-03	1	
	K77900J	Overhaul Kit, [4L60E / 4L65E / 4L70E] (Without Pistons) 2004-Up	1	
	K77900K	Overhaul Kit, [4L60E / 4L65E / 4L70E] (With Bonded Valve Body Plate) (V8-Only*) 2006-Up	1	
		MASTER L/STEEL KIT		
	DK7700-S	Master L/Steels Kit, [700R4] 1982-84	1	
	DK7700A-S	Master L/Steels Kit, [700R4] 1985-E87	1	
	DK7700B-S	Master L/Steels Kit, [700R4 / 4L60] L1987-93	1	
	DK7700BHP-S	Master L/Steels Kit, [700R4] (Hi-Performance Red Frictions) L1987-93	1	
	DK7700BZ-S	Master L/Steels Kit, [700R4] (With “Z” Pak 3/4 Frictions) L1987-93	1	
	DK7700E-S	Master L/Steels Kit, [4L60E / 4L65E] (Without Pistons) (With Hi-Energy 3/4 Frictions .080”) 1993-96	1	
	DK7700EZ-S	Master L/Steels Kit, [4L60E] (With “Z” Pak 3/4 Frictions) 1993-96	1	
	DK7700GP-S	Master L/Steels Kit, [4L60E / 4L65E] (With Pistons) (With Hi-Energy 3/4 Frictions .080”) 1997-03	1	
	DK7700G-S	Master L/Steels Kit, [4L60E / 4L65E] (Without Pistons) (With Hi-Energy 3/4 Frictions .080”) 1997-03	1	
	DK7700HP-S	Master L/Steels Kit, [4L65E] (With Pistons) (With Hi-Energy 3/4 Frictions .065”) 2001-Up	1	
	DK7700H-S	Master L/Steels Kit, [4L65E] (Without Pistons) (With Hi-Energy 3/4 Frictions .065”) 2001-Up	1	
	DK7700JP-S	Master L/Steels Kit, [4L60E / 4L65E] (With Pistons) (With Wedge Type Pump Seal) (With (6) .080” 3-4 Frictions) 2004-Up	1	
	DK7700J-S	Master L/Steels Kit, [4L60E / 4L65E] (Without Pistons) (With Wedge Type Pump Seal) (With (6) .080” 3/4 Frictions) 2004-Up	1	
	DK7700K-S	Master L/Steels Kit, [4L65E] (With (7) .062” 3/4 Frictions) 2004-Up	1	
	DK7700KP-S	Master L/Steels Kit, [4L65E] (With Pistons) (With (7) .062” 3/4 Frictions) 2004-Up	1	
		MASTER W/STEEL KIT		
	DK7700	Master W/Steels Kit, [700R4] 1982-84	1	
	DK7700A	Master W/Steels Kit, [700R4] 1985-E87	1	
	DK7700B	Master W/Steels Kit, [700R4] L1987-93	1	
	DK7700BZ	Master W/Steels Kit, [700R4] (With “Z” Pak 3/4 Frictions) L1987-93	1	
	DK7700E	Master W/Steels Kit, [4L60E] (With Hi-Energy 3/4 Frictions) 1993-96	1	
	DK7700EZ	Master W/Steels Kit, [4L60E] (With “Z” Pak 3/4 Frictions) 1993-96	1	
	DK7700GP	Master W/Steels Kit, [4L60E / 4L65E] (With Pistons) (With Hi-Energy 3/4 Frictions .080”) 1997-03	1	
	DK7700G	Master W/Steels Kit, [4L60E / 4L65E] (With Pistons) (With Hi-Energy 3/4 Frictions .080”) 1997-03	1	
	DK7700HP	Master W/Steels Kit, [4L65E] (With Pistons) (With Hi-Energy 3/4 Frictions .065”) 2001-Up	1	
	DK7700H	Master W/Steels Kit, [4L65E] (Without Pistons) (With Hi-Energy 3/4 Frictions .065”) 2001-Up	1	

	DK7700JP	Master W/Steels Kit, [4L60E / 4L65E] (With Pistons) (With Wedge Type Pump Seal) (With (6) .080" 3/4 Frictions) 2004-Up	1	
	DK7700J	Master W/Steels Kit, [4L60E / 4L65E] (Without Pistons) (With Wedge Type Pump Seal) (With (6) .080" 3/4 Frictions) 2004-Up	1	
	DK7700K	Master W/Steels Kit, [4L65E] (With (7) .062" 3/4 Frictions) 2004-Up	1	
	DK7700KP	Master W/Steels Kit, [4L65E] (With Pistons) (With (7) .062" 3/4 Frictions) 2004-Up	1	
		SUPER W/STEEL KIT		
	MRK7700	Super W/Steels Kit, [700R4] 1982-84	1	
	MRK7700A	Super W/Steels Kit, [700R4] 1985-E87	1	
	MRK7700B	Super W/Steels Kit, [4L60] L1987-93	1	
	MRK7700E	Super W/Steels Kit, [4L60E] 1993-03	1	
	MRK7700BHP	Super W/Steels Kit, [700R4 / 4L60] (Hi-Performance Red) (Kolene Steels) L1987-93	1	
	MRK7700G	Super W/Steels Kit, [4L60E] 1997-03	1	
	MRK7700GP	Super W/Steels Kit, [4L60E] (With Pistons) 1997-03	1	
	MRK7700HP	Super W/Steels Kit, [4L65E] (With Pistons) 2001-03	1	
	MRK7700JP	Super W/Steels Kit, [4L60E / 4L65E] (With Pistons) (With (6) .080" 3/4 Frictions) 2004-Up	1	
	MRK7700J	Super W/Steels Kit, [4L60E / 4L65E] (With (6) .080" 3/4 Frictions) 2004-Up	1	
		FILTER		
010	77710A	Filter, [700R4] (Wide) 1982-93	1	8667689
010	77710E	Filter, [4L60E] (*Except Deep Pan) 1993-97	1	8685774
010	77710G	Filter, [4L60E] (Corvette, Deep Sump) 1997-Up	1	24208149
010	77710F	Filter, [4L60E] (*Except Deep Pan) 1997-Up (Serial Filtration) (*Retros to 1993) **(*This Filter Looks Identical to 77710E *Except for the "S" With a Circle Stamped on the Metal)**	1	24208148
010	77710H	Filter, [4L60E / 4L65E] (Deep Pan, Truck & Van) 1998-Up	1	24208465
010	77710J	Filter, [4L60E / 4L65E] (4x4) ("Stepped" Filter) (Colorado>2004-07), (Hummer H3> 2006-07) (Isuzu (4x4)>2004-07)	1	
		FILTER KIT		
	FK77710A	Filter Kit, [700R4] (Wide) 1982-93	1	
	FK77710E	Filter Kit, [4L60E] (*Except Deep Pan & Corvette) 1993-97	1	
	FK77710G	Filter Kit, [4L60E] (Corvette, Deep Sump) 1997-Up	1	
	FK77710F	Filter Kit, [4L60E] (With Serial Filtration) **(*All Cars Except Corvette)** 1997-Up (*Retros to 1983)	1	
	FK77710H	Filter Kit, [4L60E / 4L65E] (Deep Pan, Trucks, & Vans) 1997-Up	1	
		MISC. FILTERS		
014	35712	Screen, [700R4] (Governor and Torque Converter Clutch) 1982-Up	2	8642423
014	77711	Screen, [700R4 / 4L60E / 4L65E] (Pump) 1982-Up	1	8642036
	77714	Filter, [4L60E] (Shift Solenoid) (Small Rectangular) (Snaps on Valve Body Plate)	1	8683769
	77717	Filter, [4L60E] (Force Motor/EPC) (Large Rectangular) (Snaps on Valve Body Plate)	1	24109145
	77717A	Filter, [4L60E] (Pulse Width Modulator Solenoid) (Round) (Snaps on Valve Body Plate) 1992-93	1	8680596
	77717B	Filter, [4L60E] (Force Motor) (Late)	1	24219045
		BANDS		
020	77700	Band, [700R4] (*Can Use 77700A) 1982-94	1	
020	77700A	Band, [700R4 / 4L60E] (Hi-Energy) 1995-Up	1	8673175
020	77700HPS	Band, [700R4 / 4L60E] (Hi-Energy) 1982-Up **(*Ray-Pro-Series)**	1	
020	77700K	Band, [700R4 / 4L60E / 4L65E] (With Kevlar Lining) 1982-Up	1	

TH700-R4/4L60E/4L65E

020	77700BC	Band, [700R4 / 4L60E / 4L65E] (2-5/8" Wide) (Kevlar Lining) 1982-Up **("Powerband")**	1	
020	77700BR	Band, [700R4 / 4L60E / 4L65E] (2-5/8" Wide) (Red Lining) 1982-Up **("Powerband")**	1	
020	77700BHP	Band, [700R4 / 4L60E / 4L65E] (2-5/8" Wide) 1982-Up **(*Ray-Pro -Series)**	1	
		BUSHINGS		
	K77901	Bushing Kit, [700R4 / 4L60E] (27-Spline Input Shaft) 1982-84	1	
	K77901A	Bushing Kit, [700R4 / 4L60E] (With Babbit Pump and Extension Housing Bushing) (13-Pieces) 1985-Up	1	
	K77901B	Bushing Kit, [700R4 / 4L60E] (With Teflon Pump Bushing)	1	
034	77005	Bushing, [700R4 / 4L60E] (Pump Body) (Babbit) 1982-Up	1	8687987
034	77005B	Bushing, [700R4 / 4L60E] (Pump Body) (Bronze) 1982-Up	1	
034	65005SS	Bushing, [700R4 / 4L60E] (Pump Body) (Sure Seal) 1982-Up	1	Teckpak
034	77005T	Bushing, [700R4 / 4L60E] (Pump Body) (Teflon Coated) 1982-Up	1	
036	65002	Bushing, [700R4] (Stator) (Front) (.900"ID) 1982-E84	1	8628915
036	35007A	Bushing, [700R4 / 4L60E] (Stator) (Front) (1.000"ID) L1984-Up	1	8641073
036	35007AS	Bushing, [700R4 / 4L60E] (Stator) (Front) (1.000"ID) (30-Spline Input Shaft)	1	Sonnax
037	77002	Bushing, [700R4 / 4L60E] (Stator) (Rear) (Narrow) 1982-95	1	8642904
037	77002B	Bushing, [4L60E] (Stator) (Rear) (Wide) (.470") 1995-Up	1	
037	77002BT-01	Bushing, [4L60 / 4L60E / 4L65R / 4L70E] (Stator) (Rear) (Wide) (Teflon Lined) (Wider Than OE) **(*No Machining or Modification Required) (**5ea Per Pkg)	1	Sonnax
046	77003	Bushing, [700R4 / 4L60E] (Reverse Drum) (Front) 1982-Up	1	8642905
046A	65001	Bushing, [700R4 / 4L60E] (Reverse Drum) (Rear) (1.880"OD) 1982-Up	1	8628917
052	77006	Bushing, [700R4 / 4L60E] (Input Sun Gear) 1982-Up	2	8642181
054	77007	Bushing, [700R4 / 4L60E] (Reaction Shaft) (Front) 1982-Up	1	8642908
054A	77009	Bushing, [700R4 / 4L60E] (Reaction Shaft) (Rear) 1982-Up	1	8642907
056	77010	Bushing, [700R4 / 4L60E] (Rear Sun Gear) 1982-Up	1	8642909
056	77010-01	Bushing, [700R4 / 4L60E] (Rear Sun Gear) (Wide)	1	Sonnax
064	35012	Bushing, [700R4 / 4L60E] (Case) (Babbit) 1982-Up	1	
064	35012A	Bushing, [700R4 / 4L60E] (Case) (Bronze) 1982-Up	1	8641118
064	35012S	Bushing, [700R4 / 4L60E] (Case) (Oversize)	1	Sonnax
066	8008	Bushing, [700R4 / 4L60E] (Extension Housing) (Babbit) 1982-Up	1	6260048
066	38004	Bushing, [700R4 / 4L60E] (Extension Housing) (Bronze) (Dimpled) 1982-Up	1	3717682
066	8008T	Bushing, [4L60E] (Extension Housing) (Teflon Coated) 1994-Up	1	
	77096	Sleeve, [700R4 / 4L60E] (Servo Bore) **(*Case must be Reamed)**	1	
		METAL CLAD SEALS		
070	65151	Seal, [700R4 / 4L60E] (Front) 1982-Up	1	8648394
072	38511	Seal, [700R4 / 4L60E] (Linkage Shaft) 1982-Up	1	8623056
074	8850B	Seal, [700R4 / 4L60E] (Rear) (With Flange) (Without Boot) 1982-Up	1	1243402
074	16695E-S	Seal, [4L60E] (Rear) (With Boot) 1982-Up	1	24204540
074	77153	Seal, [4L60E] (Corvette) (Rear) 1997-Up	2	
	35746Y-S	Seal, [700R4 /4L60E] (Drive Shaft Yoke Seal)	1	Teckpak
	T350-309	Yoke Seal Installation Tool	1	Teckpak
078	3991	Seal, [700R4] (Speed-O Shaft) 1982-Up	1	1240382
	77911-03SK	Seal, [700R4 / 4L60E] (2nd Apply Servo Piston) (5 Per Bag) (Viton) **(*Piston Must be Machined)**	1	Sonnax
089	77991	Retainer, [700R4 / 4L60E] (Front Seal Lock) (Metal) 1982-Up	1	8654491
		FRICTION CLUTCH		
100	77104	Friction, [700R4 / 4L60E] (3/4 Clutch) (.080") 1982-Up (*Can Use 77104G)	6	8642144

100	77104G	Friction, [700R4 / 4L60E] (3/4 Clutch) (.080") (Hi-Energy) 1993-Up	6	8679390
100	77104HP	Friction, [700R4 / 4L60E] (3/4 Clutch) (.080") (Hi-Performance Red) 1982-Up	6	
100	77104X	Friction, [700R4 / 4L60E] (3/4 Clutch) (.062") (Commercial) (Tan) 1982-Up	AR	
100	77104A	Friction, [700R4 / 4L60E] (3/4 Clutch) (.062") (Hi-Energy) 1982-Up	AR	
100	77104XHP	Friction, [700R4 / 4L60E] (3/4 Clutch) (.062") (Hi-Performance Red) 1982-Up	6	
100	K77104X	Friction/Steel Kit, [700R4 / 4L60E] (3/4 Clutch) (.062") (Tan Frictions, With Pressure Plate) 1982-Up	1	
100	K77104XHP	Friction/Steel Kit, [700R4 / 4L60E] (3/4 Clutch) (.062") (Hi-Performance Red, With Pressure Plate) 1982-Up	1	
100	R77104HP	Friction, [700R4 / 4L60E] (3/4 Clutch) (.062") (Stage 1)	6	
100	77104B	Friction, [4L60E / 4L65E] (3/4 Clutch) (.065") (Hi-Energy) 2001-Up	AR	
100	K77104HP	Friction Kit, [700R4 / 4L60E] (3/4 Clutch) (.080") (Hi-Performance) (6-Per Kit) 1982-Up	1	
100	K77104Z	Friction & Steel Kit, [700R4 / 4L60E / 4L65E] (3/4 Clutch) ("Z Pak") (*Extreme Duty) 82-Up	1	RZP-001
108	77103	Friction, [700R4] (Forward Clutch) (.078") 1982-84	5	8647350
108	77103HP	Friction, [700R4] (Forward Clutch) (.078") (Hi-Performance Red) 1982-84	5	
108	77103A	Friction, [700R4 / 4L60E] (Forward Clutch) (.070") 1985-Up	5	8654324
108	77103AHP	Friction, [700R4 / 4L60E] (Forward Clutch) (.070") (Hi-Performance Red) 1985-Up	5	
108	K77103AHD	Friction Kit, [700R4 / 4L60E] (Forward Clutch) (.070") (Hi-Performance Red) (5-Frictions) 1985-Up	1	
108	K77103HD	Friction Kit, [700R4] (Forward Clutch) (.078") (Hi-Performance Red) (5-Frictions) 1982-84	1	
110	77101	Friction, [700R4] (Reverse Input Clutch) (.078") 1982-E87	4	8654306
110	77101HP	Friction, [700R4] (Reverse Input Clutch) (.078") (Hi-Performance Red) 1982-E87	4	
110	77101A	Friction, [700R4 / 4L60E] (Reverse Input Clutch) (.070") L1987-Up	4	
110	77101AHP	Friction, [700R4 / 4L60E] (Reverse Input Clutch) (.070") (Hi-Performance Red) L1987-Up	4	
110	K77101AHP	Friction Kit, [700R4 / 4L60E] (Reverse Input Clutch) (.078") (Hi-Performance Red) (4-Frictions) L1987-Up	1	
114	35109	Friction, [700R4 / 4L60E] (Low / Reverse Clutch) (.087") 1982-Up	5	8681813
114	35109HP	Friction, [700R4 / 4L60E] (Low / Reverse Clutch) (.087") (Hi-Performance Red) 1982-Up	5	8673253
114	K35109HP	Friction Kit, [700R4 / 4L60E] (Low / Reverse Clutch) (.087") (Hi-Performance Red) (5-Frictions) 1982-Up	1	8678054
116	77102	Friction, [700R4 / 4L60E] (Overrun Clutch) (.078") 1982-Up	2	
116	77102HP	Friction, [700R4 / 4L60E] (Overrun Clutch) (.078") (Hi-Performance Red) 1982-Up	2	
116	K77102HP	Friction Kit, [700R4 / 4L60E] (Overrun Clutch) (.078") (Hi-Performance Red) (2-Frictions) 1982-Up	1	
	K77100	Friction Module, [700R4] 1982-84	1	
	K77100HP	Friction Module, [700R4] (Hi-Performance Red) 1982-84	1	
	K77100A	Friction Module, [700R4] 1985-E87	1	
	K77100AHP	Friction Module, [700R4] (Hi Performance Red) 1985-E87	1	
	K77100B	Friction Module, [700R4] L1987-93	1	
	K77100BHP	Friction & Steel Module, [700R4] (Hi-Performance Red) (With 3/4 "PowerPack) L1987-92	1	
	K77100BZ	Friction Module, [700R4] (With "Z" Pak 3/4 Frictions) L1987-93	1	
	K77100E	Friction Module, [4L60E] (With .080" Hi-Energy 3/4 Frictions) 1993-Up	1	
	K77100H	Friction Module, [4L60E / 4L65E] (With .065" Hi-Energy 3/4 Frictions) 2001-Up	1	
		STEEL CLUTCH		
120	77114	Steel, [700R4] (3/4 Clutch) (.076") 1982-E87 (*Can Use 74114A)	5	8678054
120	77114AK	Steel, [700R4] (3/4 Clutch) (.076") (Kolene) (Hi-Performance) 1982-93	5	

120	K77114AK	Steel Kit, [700R4] (3/4 Clutch) (.076") (Kolene) (Hi-Performance) (5-Per Kit)	1	
120	77114A	Steel, [700R4 / 4L60E] (3/4 Clutch) (.076") (With Notch) L1982-1/4/93	5	8671900
120	77114X	Steel, [700R4 / 4L60E] (3/4 Clutch) (.060") (Commercial) (With Notch)	AR	
120	77114XK	Steel, [700R4 / 4L60E] (3/4 Clutch) (.060") (Kolene) (Hi-Performance)	AR	
120	K77114XK	Steel Kit, [700R4 / 4L60E] (3/4 Clutch) (.060") (Kolene) (Hi-Performance) (10-Per Kit)	1	
120	77114B	Steel, [4L60E] (3/4 Clutch) (.106") 1/5/1993-Up	5	24207604
120	77114C	Steel, [4L60E] (3/4 Clutch) (.106") (OE Surface Finish) 1/5/1993-Up	3-5	
120	77114D	Steel, [4L60E / 4L65E] (3/4 Clutch) (.095") (OE Surface Finish) 2001-Up	AR	
128	77113	Steel, [700R4] (Forward Clutch) (.078") 1982-84	4	8642167
128	77113K	Steel, [700R4] (Forward Clutch) (.078") (Kolene) (Hi-Performance) 1982-84	4	
128	K77113K	Steel Kit, [700R4] (Forward Clutch) (.078") (Kolene) (Hi-Performance) (4-Steels) 1982-84	1	
128	77113A	Steel, [700R4 / 4L60E] (Forward Clutch) (.090") 1985-Up	4-5	8654325
128	77113AK	Steel, [700R4 / 4L60E] (Forward Clutch) (.090") (Kolene) (Hi-Performance) 1985-Up	4-5	
128	K77113AK	Steel Kit, [700R4 / 4L60E] (Forward Clutch) (.090") (Kolene) (Hi-Performance) (5-Steels) 1985-Up	1	
129	77123	Steel, [700R4 / 4L60E] (Forward Clutch) (.070") (Waved) (20 Teeth) 1982-3/1995	1	
129	77123B	Steel, [4L60E] (Forward Clutch) (.044") (Waved) 1994-Up	1	
129	77123D	Steel, [700R4 / 4L60E] (Forward Clutch) (.069") (Waved) (20 Teeth) 1982-Up	1	24203903
129	77123C	Steel, [4L60E] (Forward Clutch) (052" Thick) (Waved) 1995-Up	1	
130	77111	Steel, [700R4 / 4L60E] (Reverse Input Clutch) (.078") 1982-96	4	8673601
130	77111K	Steel, [700R4 / 4L60E] (Reverse Input Clutch) (.078") (Kolene) (Hi-Performance) 1982-96	4	
130	77111X	Steel, [700R4 / 4L60E] (Reverse Input Clutch) (.090") (Oversize) 1982-Up	AR	
130	77111A	Steel, [4L60E] (Reverse Input Clutch) (.078") (Turbulator) 1997-Up	4	24205267
130	77111XK	Steel, [4L60E] (Reverse Input Clutch) (.090") (Oversize) 1997-Up	4	
130	K77111K	Steel Kit, [700R4 / 4L60E] (Reverse Input Clutch) (.078") (Kolene) (Hi-Performance) (3-Per Kit) 1982-97	1	
131	77121	Steel, [700R4] (Reverse Input Clutch) (.088") (Waved) 1982-83	1	8642060
131	77121A	Steel, [700R4] (Reverse Input Clutch) (.080") (Waved) 1984-E87	1	8647067
131	77121B	Steel, [700R4 / 4L60E] (Reverse Input Clutch) (.088") (Dished) L1987-94	1	8663074
131	K77121	Waved Spring/Plate Kit, [4L60/E] (Reverse Input Drum Saver) (*Replaces Dished Steel) 1987-Up (Saves the Reverse Input Drum When the Dished Steel has Worn Into the Drum)	1	57758
131	77121C	Steel, [4L60E] (Reverse Input Clutch) (.050") (Dished) 1994-Up	1	
131	77121D	Steel, [700R4 / 4L60E] (Reverse Input Clutch) (.070") (Dished) L1987-Up	1	
134	35101	Steel, [700R4 / 4L60E] (Low / Reverse Clutch) (.068" Thick) 1982-96	5	6261120
134	35101K	Steel, [700R4 / 4L60E] (Low / Reverse Clutch) (.086" Thick) (Kolene) 1982-Up	5	
134	35101X	Steel, [700R4 / 4L60E] (Low / Reverse Clutch) (.080" Thick) (Oversize) 1982-Up	AR	.
134	77105A	Steel, [4L60E] (Low / Reverse Clutch) (.067") (Turbulator) 1997-Up	5	24205268
135	77105	Steel, [700R4 / 4L60E] (Low / Reverse Clutch) (.095") (Waved) 1987-97	1	
136	77112	Steel, [700R4 / 4L60E] (Overrun Clutch) (.092") 1982-Up	2	8642154
136	K77112K	Steel Kit, [700R4 / 4L60E] (Overrun Clutch) (.092") (Kolene) (Hi-Performance) (2-Steels) 1982-Up	1	
	K77120HP	Steel & Friction Module, [700R4 / 4L60E] (Red Frictions and Kolene Steels) 1987-Up	1	
	K77110	Steel Module, [700R4] 1982-84	1	
	K77110A	Steel Module, [700R4] 1985-93	1	
	K77110E	Steel Module, [4L60E] 1/5/1993-Up	1	
	K77110G	Steel Module, [4L60E] (With Turbulator Steels) 1997-Up	1	
		CLUTCH PRESSURE PLATES		

140	77164A	Pressure Plate, [700R4] (3/4 Clutch) (7.0 - 7.25mm) (.275") (Cast #1) 1982-86	1	8642621
140	77164B	Pressure Plate, [700R4] (3/4 Clutch) (6.0 - 6.25mm) (.227") (Cast #2) 1982-86 (*Can Use 77164F or 77164H)	1	24213589
140	77164C	Pressure Plate, [700R4] (3/4 Clutch) (5.0 - 5.25mm) (.192") (Cast #3) 1982-86 (*Can Use 77164G or 77164J)	1	8642623
140	77164D	Pressure Plate, [700R4] (3/4 Clutch) (4.0 - 4.25mm) (.157") (Cast #4) 1982-86 (*Can Use 77164K)	1	24213591
140	77164E	Pressure Plate, [700R4 / 4L60E] (3/4 Clutch) (6.48mm) (.255") 1987-1/4/1993 (*Can Use 77164B)	1	8667535
140	77164F	Pressure Plate, [700R4 / 4L60E] (3/4 Clutch) (5.65mm) (.222") 1987-1/4/1993 (*Can Use 77164B or 77164H)	1	8667536
140	77164G	Pressure Plate, [700R4 / 4L60E] (3/4 Clutch) (4.82mm) (.190") 1987-1/4/1993 (*Can Use 77164C or 77164J)	1	8667357
140	77164H	Pressure Plate, [4L60E] (3/4 Clutch) (5.77mm) (.227") (Cast #A) 1/5/1993-Up (*Can Use 77164B or 77164F)	1	24212461
140	77164J	Pressure Plate, [4L60E] (3/4 Clutch) (4.88mm) (.192") (Cast #B) 1/5/1993-Up (*Can Use 77164C or 77164G)	1	24212460
140	77164K	Pressure Plate, [4L60E] (3/4 Clutch) (3.99mm) (.157") (Cast #C) 1/5/1993-Up (*Can Use 77164D)	1	24212459
141	77173A	Apply Plate, [700R4] (3/4 Clutch) (3.30mm) (Flat) 1982-86	1	8642172
141	77173C	Apply Plate, [700R4 / 4L60E] (3/4 Clutch) (3.30mm) (Stepped) 1987-92	1	8676379
141	77173D	Apply Plate, [4L60E] (3/4 Clutch) (.225") (5-Legs) (Cast #C) 1993-Up	1	8685044
141	77173E	Apply Plate, [4L65E] (3/4 Clutch) (.218") (5.53mm) (5-Legs) 2001-Up	1	24217451
148	77193	Pressure Plate, [700R4] (Forward Clutch) (6.75mm) 1982-86	1	8642169
148	77193A	Pressure Plate, [700R4 / 4L60E] (Forward Clutch) (5.26mm) (Stamped D) 1987-Up	1	8667670
148	77193E	Pressure Plate, [700R4 / 4L60E] (Forward Clutch) (4.65mm) 1987-Up	1	8667671
148	77193F	Pressure Plate, [700R4 / 4L60E] (Forward Clutch) (4.32mm) 1987-Up	1	
148	77193B	Pressure Plate, [700R4 / 4L60E] (Forward Clutch) (5.87mm) (Stamped C) 1987-Up	1	24212468
148	77193C	Pressure Plate, [700R4 / 4L60E] (Forward Clutch) (6.43mm) (Stamped B) 1987-Up	1	24212469
148	77193D	Pressure Plate, [700R4 / 4L60E] (Forward Clutch) (9.47mm) (Stamped A) 1987-Up	1	8682867
148	77193G	Pressure Plate, [4L60E] (Forward Clutch) (5.60mm) 1997-Up	1	
149	77163	Apply Plate, [700R4] (Forward Clutch) (.254") (6.44mm) 1982-86	1	8642163
149	77183	Spacer Plate, [700R4] (Forward Clutch) (Aluminum) (.333") 1982-Up	1	8642164
149	77163A	Apply Plate, [700R4 / 4L60E] (Forward Clutch) (.142") (3.60mm) 1987-Up	1	
149	77163B	Apply Plate, [700R4 / 4L60E] (Forward Clutch) (.170") (4.32mm) 1987-Up	1	24212462
150	77161A	Pressure Plate, [700R4 / 4L60E] (Reverse Input Clutch) (.230") L1987-Up	1	8682865
150	77161B	Pressure Plate, [700R4 / 4L60E] (Reverse Input Clutch) (.240") L1987-Up	1	8682864
150	77161D	Pressure Plate, [700R4 / 4L60E] (Reverse Input Clutch) (.260") L1987-Up	1	8673603
150	77161E	Pressure Plate, [700R4 / 4L60E] (Reverse Input Clutch) (.270") L1987-Up	1	
150	77161F	Pressure Plate, [700R4 / 4L60E] (Reverse Input Clutch) (.280") L1987-Up	1	
150	77161C	Pressure Plate, [700R4 / 4L60E] (Reverse Input Clutch) (.290") L1987-Up	1	8682863
155	77584	Spacer Plate, [700R4] (Low / Reverse Clutch) (.097") 1987-89	1	8667584
155	77584A	Spacer Plate, [700R4] (Low / Reverse Clutch) (.125") 1987-89	1	8667585
155	77584B	Spacer Plate, [700R4 / 4L60E] (Low / Reverse Clutch) (.049") 1990-Up	1	8673548
155	77584C	Spacer Plate, [700R4 / 4L60E] (Low / Reverse Clutch) (.089") 1990-Up	1	8673549
155	77584D	Spacer Plate, [4L60E] (Low / Reverse Clutch) (.049") (Turbulator) 1997-Up	1	24205269
155	77584E	Spacer Plate, [4L60E] (Low / Reverse Clutch) (.089") (Turbulator) 1997-Up	1	2425270
		VALVE BODY KITS		
	K77908S	Valve Body Kit, [700R4]	1	Superior
	K77908	Shift Kit, [700R4] 1983-93	1	Transgo
	K77969	Converter Valve Kit, [700R4] (Non-Lock-Up Pump Conversion) 1982-93	1	Transgo

TH700-R4/4L60E/4L65E

	K77877	Pump Ring Kit, [700R4 / 4L60E] 1982-Up	1	Transgo
	K77969A	Conversion Valve Kit, [4L60E] (Non-Lock-Up Pump Conversion) 1993-Up	1	Transgo
	K77911	Lock-Up Kit, [700R4] (Hydraulic Lock-Up)	1	Superior
	K77908ART	Valve Body Kit, [4L60E] **(*Ratiotek "Intelligent Service Package")** 1991-06	1	Transcel
	K77908A	Shift Kit, [4L60E] 1993-Up	1	Transgo
	K77980BS	Valve Body Kit, [4L60E] 1998-Up	1	Superior
	4L60ELV	Valve Body Kit, [4L60E] (With Steel Boost Valve & Sleeve) 1998-Up	1	Superior
	K77908AS	Valve Body Kit, [4L60E] (Without Steel Boost Valve & Sleeve) 1993-97	1	Superior
	K4L60EV	Valve Body Kit, [4L60E] (With Steel Boost Valve & Sleeve) 1993-97	1	Superior
	K77877R	Pump Ring Kit, [700R4 / 4L60E] (Hi-Perforfmance) 1982-Up	1	Transgo
	K77908S	Valve Body Kit, [700R4] (Without Steel Boost Valve & Sleeve) 1982-93	1	Superior
	K700R4V	Valve Body Kit, [700R4] (With Steel Boost Valve & Sleeve) 1982-93	1	Superior
	K77908JR	Shift Kit, [700R4] (Junior) 1986-93	1	Transgo
	K77908HPF	Transaction Kit, [700R4] 1982-93 (Hi-Performance)	1	Fairbanks
	K77908HPS	Valve Body Kit, [700R4] (Hi-Performance) 1982-93	1	Superior
	700-2&3	Shift Kit, [700R4] (Hi-Performance) & (Heavy Duty / Manual) 1982-93	1	Transgo
	4L60E-HD2	Shift Kit, [4L60E] (Hi-Performance) & (Heavy Duty / Sport Truck) 1993-Up	1	Transgo
	4L60E-3	Shift Kit, [4L60E] (Full Race) (Manual Shift) 1993-Up	1	Transgo
	46-MOD	Vaccum Pressure Control Kit, [4L60E] 1993-Up	1	Transgo
	77720HD	Spring Kit, [700R4 / 4L60E] (3-4 Clutch)	1	Transgo
		OIL SEALING RINGS		
	K77903E	Ring Kit, [4L60E] 1993-Up	1	
	K77903T	Ring Kit, [700R4] (Teflon) 1982-93	1	
176	65321	Ring, [700R4 / 4L60E] (Pump Slide to Body) (Metal) 1982-Up	1	8634079
178	77301	Ring, [700R4] (Turbine Shaft) (Metal) 1982-91	4	
178	77301T	Ring, [700R4 / 4L60E] (Turbine Shaft) (Scarf Cut) (Teflon) 1982-Up	4	8642420
178	77305T	Ring, [700R4 / 4L60E] (Turbine Shaft) (Solid) (Teflon) 1982-Up	4	8667035
178	77308T	Ring, [700R4 / 4L60E] (Turbine Shaft) (Stepped Cut) (Teflon) 1982-Up	4	
179	65300T	Ring, [700R4] (Stator) (Teflon) 1982-93	2	8628055
179	77300	Ring, [4L60E] (Stator) (Solid) (Teflon) 1993-Up	2	8681292
191	65302T	Ring, [700R4] (Accumulator) (Teflon) 1982-86	2	8634161
191	65128	Seal, [700R4 / 4L60E] (1-2 & 3-4 Accumulator) (Rubber) 1987-Up	2	8635568
	65179	Ring, [700R4] (Intermediate Band Apply Pin) (Teflon)	1	8630120
194	77306	Ring, [700R4 / 4L60E] (2nd Apply Piston) (Inner) (2.162") (Metal) 1982-Up	1	
194	77306T	Ring, [700R4 / 4L60E] (2nd Apply Piston) (Inner) (2.162") (Teflon)	1	8642458
194	77307	Ring, [700R4 / 4L60E] (2nd Apply Piston) (Inner) (2.639") (Metal) 1982-Up	1	
194	77307T	Ring, [700R4 / 4L60E] (2nd Apply Piston) (Inner) (2.639") (Teflon)	1	8642459
194	77302T	Ring, [700R4 / 4L60E] (2nd Apply Piston) (Inner) (1.642") (Teflon)	1	8642084
	K77903D	"D" Ring Kit, [700R4 / 4L60E] (Servo Piston) (Viton) **(*Replaces Teflon)** 1982-03	1	
195	77303T	Ring, [700R4 / 4L60E] (2nd Apply Piston) (Outer) (Teflon)	1	8642081
199	77304T	Ring, [700R4 / 4L60E] (4th Apply Piston) (Outer) (Teflon)	1	8642480
		WASHERS & BEARINGS		
	K77907	Washer Kit, [700R4 / 4L60E] 1982-Up	1	
	K77907A	Bearing Kit, [700R4 / 4L60E] (Torrington) 1982-Up	1	
211	77400	Washer, [700R4 / 4L60E] (Stator to Drum) 1982-Up	1	8642041
229	77409	Bearing, [700R4 / 4L60E] (Stator to Input Drum) 1982-Up	1	8642066
229	77409-15	Shim Kit, [700R4 / 4L60E] (Stator) (10-Per Kit)	1	Sonnax
230	77403A	Washer, [700R4 / 4L60E] (Input Drum) (1.87 - 1.97mm) (#67) 1983-Up	1	8642067

230	77403B	Washer, [700R4 / 4L60E] (Input Drum) (2.04 - 2.14mm) (#68) 1983-Up	1	8642068
230	77403C	Washer, [700R4 / 4L60E] (Input Drum) (2.21 - 2.31mm) (#69) 1983-Up	1	8642069
230	77403D	Washer, [700R4 / 4L60E] (Input Drum) (2.38 - 2.48mm) (#70) 1983-Up	1	8642070
230	77403E	Washer, [700R4 / 4L60E] (Input Drum) (2.55 - 2.65mm) (#71) 1983-Up	1	8642071
230	77403F	Washer, [700R4 / 4L60E] (Input Drum) (2.72 - 2.82mm) (#72) 1983-Up	1	8642072
230	77403G	Washer, [700R4 / 4L60E] (Input Drum) (2.89 - 2.99mm) (#73) 1983-Up	1	8642073
230	77403H	Washer, [700R4 / 4L60E] (Input Drum) (3.06 - 3.16mm) (#74) 1983-Up	1	8642074
232	77405	Bearing, [700R4 / 4L60E] (Input Drum to Sun Gear) 1983-Up	1	8642162
235	77402A	Washer, [700R4] (Input Carrier to Race) (Plastic) 1982-85	1	8642095
238	77406	Bearing W/Races, [700R4 / 4L60E / 4L65E] (Front Planet to Reaction Shaft) (.141" Thick) (2.457"OD) (1.694"ID) 1982-03 (*Also Fits [700R4/4L60E/4L65E] Rear to Hub Case 82-03)	2	8642191
238	77406A	Bearing W/Races, [4L60E / 4L65E] (Front Planet to Reaction Shaft) (.141" Thick) (2.531"OD) (1.683"ID) 2004-Up (*Also Fits [4L60E / 4L65E] Rear Hub to Case 2004-Up)	2	24217327
241	77401	Washer, [700R4 / 4L60E] (Reaction Sun Shell) (Front) 1982-01	1	8642202
241	77408	Bearing, [4L60E / 4L65E] (Reaction Sun Shell) (Front) 2002-Up	1	24217328
244	35406A	Washer, [700R4 / 4L60E] (Sun Shell) (Rear) (4 Flat Tabs) (Plastic) 1982-Up	1	8642331
244	35406B	Washer, [700R4 / 4L60E] (Sun Shell) (Rear) (4 Round Tabs) (Plastic) **(*Fits "The Beast" Shell Only)**	1	
247	77404	Bearing, [700R4 / 4L60E] (Front Planet to Front Sun Gear) 1982-Up	1	
250	77731-09	Bearing, [700R4 / 4L60E] (Rear Planet to Sun Gear) (Inside Rear Planet) **(*Planet Must Be Disassembled)**	1	Sonnax
251	77407	Bearing, [700R4 / 4L60E] (Rear Planet to Support) 1982-Up	1	8642215
	77406-10	Shim Kit, [700R4 / 4L60E] (Rear) (.010") 1982-Up (10-Per Kit)	1	Sonnax
	K35404	Shim Kit, [700R4 / 4L60E] (Rear) (7-Pieces) 1982-Up	1	
		GASKETS & RUBBER COMPONENTS		
300	77500	Gasket, [700R4 / 4L60E] (Pan) (Cork)	1	8642360
300	77500**D** or **F**	Gasket, [700R4 / 4L60E] (Pan) (Fiber) **(F-for Farpack) or (D-for Duraprene)**	1	
	77529	Gasket, [700R4] (Accumulator Cover to Plate) 1982	1	8642129
	77529J	Gasket, [4L60E / 4L65E / 4L70E] (Accumulator Housing) 2004-Up	1	
309	13268A	Gasket, [700R4] (Pump Bolt Washer) 1982-E86	7	8626281
309	13268B	O-Ring, [700R4 / 4L60E] (Pump Bolt) L1987-Up	7	8654341
310	77531	Gasket, [700R4] (Pump) 1982-E83	1	8642040
310	77532	Gasket, [700R4 / 4L60E] (Pump) L1983-Up	1	8654143
311	3877V	O-Ring, [700R4 / 4L60E / 4L65E] (Pump Body) 1982-03	1	8654716
311	77503	Seal, [4L60E / 4L65E] (Pump to Case "Wedge Seal") (Metal / Rubber) 2004-Up	1	24226315
313	65174	O-Ring, [700R4 / 4L60E] (Pump Slide to Body)	1	8634088
314	65180	Seal, [700R4 / 4L60E] (Pump Slide) (Rubber)	1	8631283
315	65170	Seal, [700R4 / 4L60E] (Pump Slide) (Teflon)	1	8631877
	13503	O-Ring, [700R4 / 4L60E] (Shift Solenoid)	1	
	77598	O-Ring, [700R4 / 4L60E] (3-2) (PWM) (Shift Solenoid) (Large)	1	
	77599	O-Ring, [700R4 / 4L60E] (3-2) (PWM) (Shift Solenoid) (Small)	1	
317	100127	Gasket, [700R4 / 4L60E] (Transfer Case Adapter) (*For 208/ 241 / 242 / 247 / 249 / 231 / 129 / 119) (6-Bolt)	1	
317	100130	Gasket, [700R4 / 4L60E] (Transfer Case Adapter) (*For 207 / 231 / 233 / 236) (5-Bolt)	1	
320	77527	Gasket, [700R4] (Valve Body) (Upper) 1982-86	1	8647452
320	77527A	Gasket, [700R4] (Valve Body) (Upper) 1987-Up	1	8681339
320	77527E	Gasket, [4L60E] (Valve Body) (Upper) 1992-99	1	8681603
320	77527F	Gasket, [4L60E] (Valve Body) (Upper) 2000-Up	1	
320	77527K	Gasket, [4L60E / 4L65E / 4L70E] (Upper) **(*Replaces Bonded Gasket)** 2006-Up	1	

321	77528	Gasket, [700R4] (Valve Body) (Lower) 1982-86	1	8647064
321	77528A	Gasket, [700R4] (Valve Body) (Lower) 1987-Up	1	8681351
321	77528E	Gasket, [4L60E] (Valve Body) (Lower) 1992-99	1	8681606
321	77528F	Gasket, [4L60E] (Valve Body) (Lower) 2000-Up	1	
321	77528K	Gasket, [4L60E / 4L65E / 4L70E] (Lower) **(*Replaces Bonded Gasket)** 2006-Up	1	
331	77521	Lip Seal, [700R4 / 4L60E] (3-4 Clutch) (Inner) 1982-93	1	8682137
330	77520	Lip Seal, [700R4 / 4L60E] (3-4 Clutch) (Outer) 1982-93	1	8642138
332	77523	Lip Seal, [700R4 / 4L60E] (Forward Clutch) (Inner) 1982-96	1	8673361
333	77522	Lip Seal, [700R4 / 4L60E] (Forward Clutch) (Outer) 1982-96	1	8642146
334	77504E	O-Ring, [4L60E] (Input Drum to Forward Piston) 1993-Up	1	
334A	77519	Lip Seal, [700R4 / 4L60E] (Reverse Input) (Inner) 1982-Up	1	8682136
335	77518	O-Ring, [4L60 / 4L60E] (Reverse Input) (Outer) 1982-86	1	8642057
335	77518A	Lip Seal, [4L60 / 4L60E] (Reverse Input) (Outer) 1987-Up	1	8663073
338	3773	Lathe Cut Seal, [700R4 / 4L60E] (Low / Reverse Clutch) (Inner) 1982-Up	1	3812830
339	3774	Lathe Cut Seal, [700R4 / 4L60E] (Low / Reverse Clutch) (Outer) 1982-Up	1	3812831
339C	13536	Lathe Cut Seal, [700R4 / 4L60E] (Low / Reverse Clutch) (Center) 1982-Up	1	8637772
340	77525	Lip Seal, [700R4 / 4L60E] (Overrun Clutch) (Inner) 1982-96	1	8673363
341	77524	Lip Seal, [700R4 / 4L60E] (Overrun Clutch) (Outer) 1982-96	1	8642151
345	13515	O-Ring, [700R4] (Governor Cover) 1982-Up	1	
347	3410	O-Ring, [700R4] (Case Connector) 1982-91	1	
347	3410A	O-Ring, [4L60E] (Case Connector) 1992-Up	1	
348	3896	O-Ring, [700R4 / 4L60E] (Case to Extension Housing) (4-Bolt Extension Housing) 1982-97	1	1358899
348	3896A	O-Ring, [4L60E] (Extension Housing) (6-Bolt) (With 2-Piece Case) 1997-Up	1	24208660
352	77526	Lathe Cut Seal, [4L60E] (Forward Clutch Accumulator Piston) 1993-Up	1	8680653
191	65128	Seal, [700R4 / 4L60E] (1-2 & 3-4 Accumulator) (Rubber) **(*Replaces Teflon Ring)** 1987-Up	2	8635568
	K77903D	D-Ring Kit, [700R4 / 4L60E] (Servo) 1986-Up (Viton) **(*Replaces Teflon)**	1	
366	77512	O-Ring, [700R4] (Inner Servo Piston) (Donut) (Red) 1982-Up	1	
366A	77512A	O-Ring, [700R4 / 4L60E] (Servo Cover) (Outer) (Blue) 1982-Up	1	8647351
366	77311-03SK	O-Ring Kit, [700R4 / 4L60E] (Servo)	1	Sonnax
	3410	O-Ring, [700R4] (Case Connector) 1982-91 (*Also Speed-O Sleeve, Inner)	1-2	10054241
369	13583A	O-Ring, [4L60E] (Speed Sensor) 1996-Up	1	10456194
369	13583	O-Ring, [700R4 / 4L60E] (Speed-O Housing) (Outer) (1-7/8"OD) 1982-95	1	25501478
371	3292	Boot, [700R4 / 4L60E] (Filler Tube) 1982-Up	1	1259475
373	77598	O-Ring, [700R4] (Pump Cover Screen) 1982	1	8642581
373	13582	Boot, [700R4] (Detent Cable) 1982-93	1	25518260
374	13538	O-Ring, [700R4 / 4L60E] (Output Shaft Yoke Sleeve to Yoke) 1982-Up	1	3151052
	34574	O-Ring, [4L60E] (Cooler Line Fitting) (Takes 2) 1993-Up	2	1993012
379	77547	Seal, [700R4 / 4L60E] (Filter) 1982-92	1	8657767
379	77547A	Seal, [4L60E] (Filter) 1993-Up	1	
380	13503	O-Ring, [700R4 / 4L60E] (Turbine) (Input Shaft) (*With Pilot Up Thru 1997) (Small, V-8) (.489") 1982-97	1	8630049
380	13503A	O-Ring, [700R4 / 4L60E] (Turbine) (Input Shaft) (Goes Behind Splines) (Small, 4 & 6 Cylinder Type) (.801") 1993-Up	1	
380	13503B	O-Ring, [700R4 / 4L60E] (Turbine) (Input Shaft) 1998-Up	1	24212987
390	K77900-2	External Seal Kit, [700R4 / 4L60E] (With Pan Gasket) 1982-Up	1	
		TECHNICAL MANUALS		
	TM700R4	Technical Manual, [700R4]	1	ATSG
	TM4L60	Technical Manual, [700R4] 1987-93	1	ATSG

	TMGMCBTM	Code Book, [4L60E] (Diagnostic) 1991-07	1	ATSG
	TM4L60E	Technical Manual, [4L60E]	1	ATSG
	TM4L60ES	Technical Manual, [4L60E] (Update)	1	ATSG
	TM700R4S	Technical Manual, [700R4] (Supplement) 1991	1	ATSG
		ELECTRICAL COMPONENTS		
410	77947	Switch, [4L60E] (MLPS / PRNDL) (4 & 7 Pin Connectors) (Black Plastic) 1996-03	1	12450016
410	77947A	Switch, [4L60E / 4L65E] (MPLS / PRNDL) (11-Pin Single Connector) 2004-Up	1	24221125
	77946	Switch, [700R4] (4-3 Pulse) (2-Prong) (on Valve Body) (Normally Closed) 1982-93	1	8642346
	65618	Switch, [700R4] (4th Clutch Pressure Switch) (1-Prong) (Normally Closed) 1982-93	1	8683502
	65618A	Switch, [700R4] (Oil Pressure) (2-Prong) (Normally Open) 1982-93	1	
	77948	Switch, [700R4] (Torque Converter Clutch Signal) (1-Prong) (Normally Open) 1982-93	1	8642473
	K013	Pressure Switch Kit, [700R4] (Lock-Up in 4th) (External) (With Wiring)	1	
418	K34326U	Solenoid, [4L60E] (Pulse Width Modulated) (3-2 Down Shift) 1992-95	1	Teckpak
418	77942	Solenoid, [4L60E] (TCC / PWM 1995-Up) (3-2 Downshift 1993-95) (Round)	1	24227792
418	77926	Solenoid, [4L60E] (Pulse Width Modulated) (3-2 Down Shift) (On/Off) (White Connector) 1996-Up	1	24212327
	MS4L60E	Solenoid Master Kit, [4L60E] (All Solenoids) (6-each) (Without Harness) 1993-95	1	Tackpak
	MS4L60EA	Solenoid Master Kit, [4L60E] (All Solenoids) (6-each) (Without Harness) 1996-Up	1	Teckpak
	MS4L60EH	Solenoid Master Kit, [4L60E] 1993-95 (Contains: (1) Lock-Up With Wire Harness, (1) Force Motor, (1) 3-2 Down Shift, (2) Shift & (1) Manifold Pressure Switch)	1	Teckpak
	MS4L60E96H	Solenoid Kit, [4L60E] 1996-Up (Contains: (1) Lock-Up With Wire Harness, (1) Force Motor, (1) 3-2 On/Off, (1) Torque Converter Clutch Pulse Width Modulated, (2) Shift & (1) Manifold Pressure Switch)	1	Teckpak
	K77957A	Solenoid Master Kit, [4L60E] (With Wire Harness) 1993-94	1	Rostra
	K77957AR	Solenoid Kit, [4L60E] (With Wire Harness) 1995	1	Rostra
	K77975BR	Solenoid Master Kit, [4L60E] (With Wire Harness) 1996-Up	1	Rostra
421	77945	Solenoid, [4L60E] (1-2 & 3-4 Shift) (OEM) 1993-Up	2	24230298
421	K84825U	Solenoid, [4L60E] (1-2 & 3-4 Shift) (Universal Style) 1993-Up	2	Teckpak
421	77945R	Solenoid, [4L60E] (1-2 & 3-4 Shift) (Universal Style) 1993-Up	1	Rostra
421	RE77945	Solenoid, [4L60E] (1-2 & 3-4 Shift) 1993-Up	2	Raybestes
425	K77929R	Solenoid, [700R4 / 4L60E] (TCC) (Universal Style) 1982-Up	1	Rostra
425	K77929U	Solenoid, [700R4 / 4L60E] (TCC) (Universal Style) 1982-Up	1	Teckpak
425	K77929A	Solenoid, [4L60E] (TCC) (Anti-Bleed) 1993-Up	1	Rostra
425	77929	Solenoid, [700R4] (Torque Converter Clutch) (Type 2) (Yellow)	1	8654122
425	77930	Solenoid, [700R4] (Torque Converter Clutch) (Type 4) (Red)	1	8654124
425	77931	Solenoid, [700R4] (Torque Converter Clutch) (Type 2) (Black)	1	8654123
425	77932	Solenoid, [700R4] (Torque Converter Clutch) (Type 1) (White)	1	8654121
425	77934	Solenoid, [700R4] (Torque Converter Clutch) (Type 9) (Orange)	1	8654129
425	77935	Solenoid, [700R4] (Torque Converter Clutch) (Type 6) (Dark Green)	1	8654126
425	77936	Solenoid, [700R4] (Torque Converter Clutch) (Type 5) (Blue)	1	8654125
425	77938	Solenoid, [700R4] (Torque Converter Clutch) (Type 10) (Brown)	1	8654130
425	77939	Solenoid, [700R4] (Torque Converter Clutch) (Type 15) (Dark Blue)	1	8654415
425	77949N	Solenoid, [700R4] (Torque Converter Clutch) (Type 18) (Light Brown)	1	10478100
	77942-01K	Snout W/O-Ring, [700R4 / 4L60E] (TCC Solenoid) (Aluminum) Up to 1996	1	Sonnax
	77942-02K	Snout W/O-Ring, [4L60E / 4L65E] (TCC Solenoid) (With Anti-Drainback Valve) 1997-Up	1	Sonnax
425	77995	Universal Solenoid W/Wire Harness, [4L60E] (Torque Converter Clutch) 1993-02	1	Rostra
425	77995A	Solenoid & Wire Harness, [4L60E / 4L65E] (TCC) (13-Prong) (Gray Connector) (*With Anti- Bleed Solenoid) 1993-02	1	Rostra
425	77995BR	Solenoid & Wire Harness, [4L60E / 4L65E] (TCC) (13-Prong) (Gray Connector) 2003-06 (*For Units Without ISS On Stator)	1	Rostra

TH700-R4/4L60E/4L65E

425	77995D	Solenoid & Wire Harness, [4L60E / 4L65E] (TCC) (*For Units With ISS on Stator) 2006-Up	1	24234121
425	K77929H	Solenoid & Wire Harness, [4L60E] 1993-02	1	Teckpak
	46-MOD	Vacuum Pressure Control Kit, [4L60E] 1993-Up	1	Rostra
435	77985	Solenoid, [4L60E] (Variable Force Motor) 1993 Only*	1	8683434
435	34605A	Solenoid, [4L60E] (Pressure Control) (Force Motor) 1993-02 (Has 2-Flat Blades on End of Solenoid)	1	24220158
	4L6-SOL-KT	Repair Kit, [4L60E] (Force Motor Solenoid) 1992-02 **(*With Tool Kit)** (*Fixes 4-Solenoids)	1	Transgo
	4L6-SOL-4	Repair Kit Refills, [4L60E] (Force Motor Solenoid) 1992-02 **(*Without Tool Kit)**	1	Transgo
435	34605C	Solenoid, [4L65E] (Pressure Control) (Force Motor) (Black Connector) 2003-Up	1	24230632
	77960	Sensor, [700R4 / 4L60E] (Vehicle Speed Sensor) (Vehicle Speed) (2"OD) 1983-Up	1	8673299
	77960A	Sensor, [4L60E] (Vehicle Speed Sensor) (Vehicle Speed) (1"OD) 1996-Up	1	14056520
	77949M	Switch, [700R4] (Temperature Switch) 1987-93	1	8673634
	77952	Sensor, [4L60E / 4L65E] (ISS) (Input Speed) (Bolts to Stator) (With 3-Prong Connector) 2005-Up	1	24244544
442	77943	Switch, [4L60E] (Manifold Pressure) 1993-Up	1	24219581
	K77912	Universal Adjustment Vaccum Switch, [700R4] (1" to 6" of Vaccum)	1	Superior
	K77912A	Universal Adjustment Vaccum Switch, [700R4] (6" to 22" of Vaccum)	1	Superior
444	84893	Connector, [700R4] (Case) (4-Prong) (*Replaces 2 & 3-Prong) (Universal) 1982-93	1	12300205
444	77983	Connector, [700R4] (Case) (3-Prong) 1982-93	1	8634383
	12085533	Wire Harness, [700R4] (External) (3-Wire) 1982-93	1	
	77971	Repair Kit, [4L60E / 4L65E] (Park / Neutral Switch) (7-Wire) 1995-Up	1	15305887
	K77971	Repair Kit, [4L60E / 4L65E] (Park / Neutral Switch) (4 & 7-Wire) 1995-Up	1	
	77972	Repair Kit, [4L60E / 4L65E] (Park / Neutral Switch) (4-Wire) 1995-Up	1	15305925
	12085498	Repair Kit, [700R4 / 4L60E] (*Fits 77960 VSS) 1983-Up	1	
	34829	Repair Kit, [4L60E] (*Fits 77960A VSS) 1996-Up	1	350-0056
	77994	Repair Kit, [4L60E] (External Wire Harness) (13-Pin Connector) 1993-Up	1	Rostra
		MISC. COMPONENTS		
475	77578	Seal, [700R4] (With Splines) (Input Housing to Output Shaft) (Plastic) 1982-92	1	8642178
475	77578A	Seal, [4L60E] (With Splines) (Input Housing to Output Shaft) (Viton) 1993-Up	1	8677268
480	77734B	Ball & Capsule, [700R4 / 4L60E] (Input Shaft)	1	8685839
480C	77978	Ball & Capsule, [700R4 / 4L60E] (3-4 Accumulator) (In Case, Under Valve Body) 1987-Up	1	8634400
480C	77701-076	Ball & Capsule, [700R4 / 4L60E] (3rd Accumulator) (Improve 2-3 Shift Feel) (In Case Under Valve Body)	1	Sonnax
	77890	Ball & Capsule, [700R4 / 4L60E] (In Case, Under Low / Reverse Piston) 1988-Up	1	8663890
	77761C-10	Orifice Plug, [700R4 / 4L60E] (Reverse Clutch Piston Capsule) (Pack of 10ea)	1	Teckpak
482	77898	Ball & Capsule, [700R4 / 4L60E] (Input Drum) 1987-Up (Fits Under Piston)	1	24208262
482	K070	Ball & Capsule, [700R4 / 4L60E] (With Spring) (Input Drum) 1987-Up (Fits Under Piston) (3-4 Clutch Rapid Relief Valve)	1	Superior
482	8663707	Orifice Plug, [7004R / 4L60E] (Input Drum) (Under #230 Spacer)	2	8663707
	65168	Cup Plug, [700R4 / 4L60E] (Park Pawl Shaft)	1	8620318
	8631146	Orifice Plug, [700R4 / 4L60E] (Stator) (4.3mm)	1	8631146
	77831	Orifice Plug, [4L60E] (Torque Converter Clutch) (in Stator) 1996-Up	1	Teckpak
	30130	GM (E-Clips)	1	9431762
	35800A	Grommet, (GM Linkage) (Round) (Plastic)	1	
	65800	Grommet, (GM Linkage) (Round) (Black Rubber)	1	
	30136	GM, (Hitch Pins)	1	
	K35803U	GM, (Universal Dust Cover)	1	Teckpak
490	35910A	Vent, [700R4 / 4L60E] (Case) (Plastic) 1982-91	1	8633408
490	35910B	Vent, [4L60E] (Case) (Metal) 1992-Up	1	24200374

494	3999U	Filler Tube Repair End	1	Teckpak
494	K77999U	Filler Tube & Dip Stick, [700R4]	1	Teckpak
	34575	Retaining Clip, [4L60E] (*For Push-in Type Cooler Fittings) 1996-Up	2	24205103
497	K65940U	Detent Cable, [700R4] (Universal)	1	
497	K35955CE	Detent Cable End Upper, [700R4] ("Teardrop" Style Connector) (GM) 1976-Up	1	Teckpak
	AS1-01K	T V Cable Corrector Kit, [700R4] (5 Per Kit)	1	Sonnax
497	K77978	Detent Cable, [700R4] (Overall Length 45")	1	
497	K77909U	Repair End Detent, (Large GM) [700R4 / 125C / 200-4R / 440T4 / 325-4L] 1980-Up	1	Teckpak
497	77872-02K	TV Cable Repair Kit, [4L60E] (GM) [700R4 / 125C / 200-4R / 440T4 / 325-4L]	1	Sonnax
	AS3-03K	Linkage Plate, (TV Bracket For Edelbrock Carburator)	1	Sonnax
	AS4-04K	Linkage Plate, (TV Bracket For Holley Carburator)	1	Sonnax
		HARD PARTS		
500	77912	Pump, [700R4] (Small Shaft) (Stator Cast # 031, 025) (Body Cast # 380) 1982-E84	1	8647967
500	77914	Pump, [700R4] (Large Shaft) (Non-Aux) (Stator Cast # 025, 031, 304, or 570) (Body Cast #132, 303, 380 or 732) L1984-3/87 (*025,031 Fits 380 Body), (*570,304 Fits 132,303,732 Body)	1	8667080
500	77914A	Pump, [700R4] (Aux Type) 4/1987-92 (Stator # 570, 596, 612, or 828) (Body # 132, 303, 732)	1	
500	77914B	Pump, [4L60E] (With 1-Piece Case) (Non-PWM) 1992-95 (Stator # 101, 596, 612) (Body # 132, 303, 732)	1	
500	77914BM	Pump, [4L60] (*Modified From Non-Aux Type)	1	
500	77914C	Pump, [4L60E] (With 1-Piece Case) (Without Lip, With PWM) 1995-96 (Stator Cast # 504, 838, or 955) (Body # 073, 836, or 951) (*Less Valves)	1	
500	77914F	Pump, [4L60E] (With 2-Piece Case) (With Lip) L1995-96 (Stator Cast # 504 or 838) (Body Cast # 073) (*Less Valves) **(*Cannot Use 77914C)**	1	
500	77914D	Pump, [4L60E / 4L65E] (With 2-Piece Case) (Bolt-on Bell) (13-Vane) 1997-9/02 (Stator # 611 or 705) (Body # 073 or 555) (*Less Valves) (6-7/8" Long Stator Tube) (O-Ring to Surface Measures .160" Thick)	1	
500	77914G	Pump, [4L65E] (With PWM) (13-Vane) (Long Shaft) (Stator # 611 or 705) (Body # 073 or 555) (*Less Valves) (7-3/8" Long Stator Tube) (*Uses an Outer O-Ring on Body)	1	
500	77914DA	Pump, [4L60E / 4L65E] (With 2-Piece Case) (13-Vane) 9/2002-04 (Stator # 611 or 705) (Body # 073 or 555) (*Less Valves) (6-7/8" Stator Tube) (O-Ring to Rear Surface .100" Thick)	1	
500	77914GA	Pump, [4L60E / 4L65E] (With 2-Piece Case) (13-Vane) 9/2002-04 (Stator # 611 or 705) (Body #073 or 555) (*Less Valves) (7-3/8" Stator Tube) (O-Ring to Surface .100" Thick)	1	
500	77914DB	Pump, [4L60E / 4L65E] (With 2-Piece Case) (13-Vane) 2004 (Stator # 611) (Body # 073) (*Less Valves) (6-7/8" Long Stator Tube) (*Does Not Use an Outer O-Ring)	1	
500	77914GB	Pump, [4L60E / 4L65E] (With 2-Piece Case) (13-Vane) 2004 (Stator # 611 or 705) (Body #073) (*Less Valves) (7-3/8" Long Stator Tube) (*Does Not Use an Outer O-Ring)	1	
500	77914DC	Pump, [4L60E / 4L65E] (With 2-Piece Case) (13-Vane) 2005-06 (Stator # 075 or 672) (Body # 073) (*Less Valves) (No ISS) (6-7/8" Long Stator Tube) (*Does Not Use an Outer O-Ring)	1	
500	77914GC	Pump, [4L60E / 4L65E] (With 2-Piece Case) (13-Vane) 2005-Up (Stator # 075 or 672) (Body # 073) (*Less Valves) (*No ISS) (7-3/8" Long Stator Tube) (*Does Not Use an Outer O-Ring)	1	
500	77914GD	Pump, [4L60E / 4L65E] (With 2-Piece Case) (13-Vane) 2004-Up (Stator # 611 or 705) (Body # 073) (*Less Valves) (*No ISS) (7-3/8" Stator Tube) (*Does Not Use an Outer O-Ring)	1	
500	77914HA	Pump, [4L60E / 4L65E / 4L70E] (With 2-Piece Case) (13-Vane) 2005-Up (Stator # 075 or 672) (Body # 073) (*Less Valves) (*With ISS) (6-7/8" Long Stator Tube) (*Does Not Use Outer O-Ring)	1	
500	77914H	Pump, [4L60E / 4L65E / 4L70E] (With 2-Piece Case) (13-Vane) 2005-Up (Stator # 075 or 672) (Body # 073) (*Less Valves) (*With ISS) (7-3/8" Long Stator Tube) (*Does Not Use Outer O-Ring)	1	
	K033	Bell Housing Adapter Inserts, [4L60E] (Bolt On Pump) (*Allows Use of Earlier Pump Body on the Bolt on Bell Housing Applications)	1	Superior
		PUMP COMPONENTS		
089	77991	Retainer, [700R4 / 4L60E] (Front Seal Lock) (Metal) 1982-Up	1	8654491
176	65321	Ring, [700R4 / 4L60E] (Pump Slide to Body) (Metal) 1982-Up	1	8634079

TH700-R4/4L60E/4L65E

309	13268A	Gasket, [700R4] (Pump Bolt Washer) 1982-E86	7	3884683
309	13368B	O-Ring, [700R4 / 4L60E] (Pump Bolt) L1982-Up	7	
313	65174	O-Ring, [700R4 / 4L60E] (Pump Slide) 1982-Up	1	
314	65170	Seal, [700R4 / 4L60E] (Pump Slide) (Teflon) 1982-Up	1	8631283
315	65180	Seal, [700R4 / 4L60E] (Pump Slide) (Rubber) 1982-Up	1	8631877
482	8628732	Capsule W/Check Ball, [700R4 / 4L60E] (*Fits in Stator)	1	8628732
	8631146	Orifice Plug, [700R4 / 4L60E] (Stator) (4.3mm)	1	8631146
507	65805	Stop, [700R4] (Converter Clutch Valve)	1	8634705
507	77805-K	Valve, [700R4 / 4L60E] (NON-PWM Torque Converter Clutch Apply Valve)	1	Sonnax
507	77805EK	Valve, [4L60E] (With PWM & [4L65E] Torque Converter Clutch Apply Valve)	1	Sonnax
507	77805-S-25	Seal, [4L60E] (TCC Apply Valve) (Teflon Rings) (*For 77805-K & 77805-EK) (25ea Per Pack)	1	Sonnax
507	K042	Valve Kit, [4L60E] (PWM Torque Converter Clutch Apply Valve) (Power Valve)	1	Superior
507	65918	Pressure Regulator Valve, [700R4] (With 2-Flats) 1982-93	1	8684048
507	65918A	Pressure Regulator Valve, [4L60E] 1993-Up	1	8684049
507	77917-06	Pressure Regulator Valve, [700R4] (Oversized) **(*Use With 77917-TL)**	1	Sonnax
507	77917-07	Pressure Regulator Valve, [4L60E / 4L65E] (Oversized) **(*Uses 77917-TL)** 1993-Up	1	Sonnax
	77917-TL	Reamer & Guide, [700R4 / 4L60E] (Oversize Pressure Regulator Valve) **(*Use With 77917-06 and 77917-07)**	1	Sonnax
507	77695	Spring, [700R4] (Pressure Regulator) 1982-93	1	8634490
507	77696	Spring, [700R4] (Pressure Regulator) (1.94" Long) (Pink) 1982-93	1	8642751
507	77697	Spring, [4L60E] (Pressure Regulator) (Outer) 1993-Up	1	8680732
507	77698	Spring, [4L60E] (Pressure Regulator) (Inner) 1993-Up	1	
507	SC4L60	Sure Cure Kit, [700R4 / 4L60]	1	Sonnax
507	SC4L60E	Sure Cure Kit, [4L60E] (PWM) **(*Must Use 77754-R2, 77754-TL & 77917-TL)**	1	Sonnax
	77754-R2	Reamer, [4L60E] (Torque Converter Clutch Regulator) (*For SC4L60E)	1	Sonnax
	77754TL	Reamer, [4L60E] (*For SC4L60E)	1	Sonnax
	77917TL	Reamer & Guide, [700R4 / 4L60E] (Oversize Pressure Regulator Valve) **(*Use With SC4L60 and SC4L60E)**	1	Sonnax
507	11503348	C-Clip, [700R4] (Holds Reverse Boost in Stator)	1	11503348
507	K77898S	Valve & Bushing Assembly, [700R4 / 4L60] (Reverse Boost) (O-Ring Style)	1	Sonnax
507	K77898A	Valve & Bushing Assembly, [700R4 / 4L60] (Reverse Boost) (Factory Style)	1	Sonnax
507	8648959	Valve & Bushing Assembly, [700R4] (Reverse Boost) (.374"OD Large & .296"OD Small Land)	1	8648959
507	K020	Valve & Bushing Assembly, [700R4] (Reverse Boost) (.433"OD Large & .369"OD Small Land)	1	Superior
507	77898E-3K	Valve & Bushing Assembly, [4L60E] (Reverse Boost) (.490"OD)	1	Sonnax
507	77917-04K	Valve & Sleeve Assembly, [700R4] (T.V. Boost) (.500"OD) (Factory Style)	1	Sonnax
507	77805-S-25	O-Rings, [*For 77917 Series Valves] (25-Per Pack)	1	Sonnax
507	77917-500	Valve & Sleeve Assembly, [700R4] (T.V. Boost) (.500"OD) (O-Ring Type)	1	Sonnax
507	77917-03K	Valve & Sleeve Assembly, [700R4] (T.V. Boost) (.471"OD) (Factory Style)	1	Sonnax
507	K77896	Valve & Sleeve Assembly, [700R4] (T.V. Boost) (.471" Diameter Valve)	1	8634940
507	77917-471	Valve & Sleeve Assembly, [700R4] (T.V. Boost) (.471"OD) (O-Ring Type)	1	Sonnax
507	77917-02K	Valve & Sleeve Assembly, [700R4] (T.V. Boost) (.423"OD) (Factory Style)	1	Sonnax
507	77917-01K	Valve & Sleeve Assembly, [700R4] (T.V. Boost) (.423" Diameter Valve)	1	Sonnax
507	77898E-6K	Valve & Sleeve Assembly, [4L60E] (T.V./ Reverse Boost) (.470"OD) (Factory Style)	1	Sonnax
507	77898E-4K	Valve & Sleeve Assembly, [4L60E] (T.V. / Reverse Boost) (.470"OD) (Valve, Sleeve , & (2) O-Rings)	1	Sonnax
507	K77897	Valve & Sleeve, [4L60E] (T.V. / Reverse Boost) (.500"OD) 1993-Up	1	
507	4L60E-BOOST	Valve & Sleeve Assembly, [4L60E] (T.V. / Reverse Boost) (.500"OD) (Hi-Performance)	1	Transgo

507	77898E-K	Valve & Sleeve Assembly, [4L60E / 4L65E] (T.V. / Reverse Boost) (.490"OD) (Valve, Sleeve, & (2) O-Rings) 1992-04	1	Sonnax
507	77898E-3K	Valve & Sleeve Assembly, [4L60E] (T.V. / Reverse Boost) (.490"OD) (Factory Style)	1	Sonnax
507	77898E-7K	Valve & Sleeve Assembly, [4L60E / 4L65E] (T.V. / Reverse Boost) (.490"OD) (*For ISS Type Stator) (With (2) O-Rings) 2005-Up	1	Sonnax
		HARD PARTS (Continued)		
510	77916A	Body, [700R4] (Cast # 380) 1982-E84	1	8649950
510	77916B	Body, [700R4] (Cast # 132, 303, 732, 951) L1984-94	1	8649964
510	77916C	Body, [4L60E] (With 1-Piece Case) (Cast # 073, 836, 951) (Non-PWM) 1992-94	1	
510	77916F	Body, [4L60E] (With 2-Piece Case) (Cast # 073) L1995-96	1	24204797
510	77916D	Body, [4L60E] (With 1-Piece Case) (With PWM) L1995-97	1	
510	77916G	Body, [4L60E / 4L65E] (With 2-Piece Case) (13-Vane) 1997-99/02 (Cast # 073 or 555) (O-Ring to Rear Surface .160" Thick)	1	
510	77916GA	Body, [4L60E / 4L65E] (With 2-Piece Case) (13-Vane) 9/2002-04 (Cast # 073 or 555) (O-Ring to Rear Surface .100" Thick)	1	
510	77916H	Body, [4L60E / 4L65E] (With 2-Piece Case) (13-Vane) 2004-Up (Cast # 073) (*Does Not Use Outer O-Ring)	1	
510	77916HA	Body, [4L60E / 4L65E] (With 2-Piece Case) (Hi Volume) 4/2004-Up (Has Smaller Rotor & Offset Outer Slide)	1	
520	77915	Stator, [700R4] (Small Shaft) (Cast # 031 or 025) 1982-E84	1	
520	77917A	Stator, [700R4] (Large Shaft) (Non Auxiliary) (Cast # 304 or 570) L1984-3/87	1	8647968
520	77918A	Stator, [700R4] (Auxiliary) (Cast # 570, 596, 612, 828) 3/1987-93	1	8647984
520	77918B	Stator, [4L60E] (Non-Pulse Width Modulated) (Cast # 101, 596, 612) 1992-95	1	
520	77918F	Stator, [4L60E] (Cast # 504, 838) L1995-96	1	
520	77918D	Stator, [4L60E / 4L65E] (Cast # 611 or 705) (6-7/8" Long Tube) (Less Valves) 1997-2004	1	24209050
520	77918G	Stator, [4L60E / 4L65E] (Cast # 611 or 705) (7-3/8" Long Tube) (Less Valves) 1997-2004	1	
520	77918DA	Stator, [4L60E / 4L65E] (Cast # 075 or 672) (6-7/8" Long Tube) (Less Valves) (No ISS) 2005-06	1	
520	77918GA	Stator, [4L60E / 4L65E] (Cast # 075 or 672) (7-3/8" Long Tube) (Less Valves) (No ISS) 2005-06	1	
520	77918HA	Stator, [4L60E / 4L65E / 4L70E] (Cast # 075 or 672) (6-7/8" Long Tube) (Less Valves) (With ISS) 2005-Up	1	
520	77918H	Stator, [4L60E / 4L65E / 4L70E] (Cast # 075 or 672) (7-3/8" Long Tube) (Less Valves) (With ISS) 2005-Up	1	
		PUMP COMPONENTS (Continued)		
507	77918S-06K	Stator, [4L60E / 4L65E] (6-7/8") 2004-Up	1	Sonnax
507	77918SK	Stator Shaft Tube, [700R4 / 4L60E / 4L65E] (Universal) (6-7/8" Long) (No ISS Sensor) (Comes With 27 & 30-Spline Bushing) 1982-3/2004	1	Sonnax
507	77918S-1K	Stator, [4L60E / 4L65E] (300mm) [4L60E] 1999-04, [4L65E] 2001-04 (No ISS Sensor)	1	Sonnax
507	77918S-07K	Stator, [4L60E / 4L65E] (7-3/8" Long) 2004-Up (Has ISS Sensor on the Stator)	1	Sonnax
531	K65927A	Rotor Kit, [700R4 / 4L60E] (10-Vane) (.7069" Rotor) 1982-96	1	8649951
531	K65927B	Rotor Kit, [4L60E / 4L65E] (13-Vane) (.707" Rotor) 1997-Up	1	24219538
532	65927	Rotor, [700R4] (7-Vane) 1982-86	1	
532	65927A	Rotor, [700R4 / 4L60E] (10-Vane) 1982-96	1	
532	65927B	Rotor, [4L60E] (13-Vane) (.7070" to .7075") 1997-Up	1	24208568
533	75926	Vane, [700R4 / 4L60E] 1982-98	7-13	8631280
507	K77910A	Vane & Ring Kit, [700R4 / 4L60E] (10-Vane) 1982-96	1	
507	K77910	Vane & Ring Kit, [700R4] (7-Vane) 1982-86	1	
507	K77910B	Vane & Ring Kit, [4L60E] (13-Vane) 1997-Up	1	
534	65928A	Pump Slide, [700R4 / 4L60E] 1982-Up	1	8634082
535	65797	Pivot Pin, [700R4 / 4L60E] (Pump Slide) 1982-Up	1	

537	77723	Spring, [700R4 / 4L60E] (Pump Slide) (Inner) 1982-Up	1	8639562
536	77722	Spring, [700R4 / 4L60E] (Pump Slide) (Outer) 1982-Up	1	8639563
536	77722K	Spring Set, [700R4 / 4L60E] (Pump Slide) (Inner & Outer) 1982-Up	1	
536	77722-01K	Spring, [700R4 / 4L60E] (Pump Slide) (5-Per Bag) (Hi-Performance) (Maintains High Volume at High RPM) (*One Spring Replaces Inner & Outer Spring)	1	Sonnax
536	65798	Spring, [4L60E / 4L65E] (Pump Slide) (.645"OD) (Conical Shaped) 2003-Up (*Retro Fits to 1997)	1	
	77917-RV	Shim, [700R4 / 4L60E] (Pump Slide) (10-Per Bag) (***Use With 77722-01K Springs***)	1	Sonnax
538	65925S	Ring, [700R4 / 4L60E] (Pump Rotor to Vane) (Steel) 1982-Up	2	24201144
538	K77878	Pump Ring/Spring Kit, [4L60E] 1992-Up (2-Vane Rings, Inner & Outer Slide Springs, & Pressure Regulated Spring)	1	Superior
538	K77877S	Ring & Spring Kit, [700R4] (2-Vane Rings, Inner & Outer Slide Springs, & Pressure Regulator Spring) 1982-92	1	Superior
539	65929	Rotor Guide, [700R4] (7-Vane) 1982-86	1	8654733
539	65929A	Rotor Guide, [700R4 / 4L60E] (10-Vane) 1982-96	1	8654734
539	65929B	Rotor Guide, [4L60E] (Pump) (13-Vane) 1997-Up	1	24205410
540	65798	Spring, [700R4 / 4L60E] (Under Pivot Pin) 1982-Up	1	
547	77775A	Apply Ring, [700R4 / 4L60E] (3-4 Clutch) (5-Fingers) (Cast # 7) (Cast # Is on the Finger)	1	8642375
		HARD PARTS (Continued)		
554	77733A	Drum W/Shaft, [700R4] (Input) (27-Spline With Pilot) 1982-E84 (Small Shaft) (V-8)	1	
554	77733B	Drum W/Shaft, [700R4] (Input) (27-Spline No Pilot) 1982-E84 (Small Shaft) (2.8L) (V-6)	1	8647963
554	77733C	Drum W/Shaft, [700R4] (Input) (30-Spline With Pilot) L1984-86	1	8647965
554	77733D	Drum W/Shaft, [700R4] (Input) (27-Spline No Pilot) L1984-86 (Large Shaft) (2.8L) (V-6)	1	8657902
554	77733H	Drum W/Shaft, [4L60E] (Input) (30-Spline With Pilot) 5/1993-Up	1	
554	77733G	Drum W/Shaft, [700R4 / 4L60E] (Input) (30-Spline With Pilot) 1987-5/93	1	8667659
554	77733K	Drum W/Shaft, [4L60E] (Input) (27-Spline No Pilot) 5/1993-97 (Large Shaft)	1	8667661
554	77733J	Drum W/Shaft, [700R4 / 4L60E] (Input) (27-Spline No Pilot) 1987-5/93 (Large Shaft)	1	
554	77733L	Drum W/Shaft, [4L60E / 4L65E] (Input) (30-Spline No Pilot) (Large Shaft, Long Splines) (With O-Ring) 1998-05	1	
554	77733M	Drum W/Shaft, [4L60E / 4L65E] (Input) (30-Spline No Pilot) 2005-Up (Large Shaft) (With 15 Teeth Reluctor on Shaft)	1	
554	77733N	Drum W/Shaft, [4L60E] (Input) (27-Spline No Pilot) 2005-Up (Small Shaft) (With 15 Teeth Reluctor On Shaft)	1	
556	77716	Drum, [700R4] (Reverse Input) (With Check Ball) 1982-2/87	1	8642943
556	77716A	Drum, [700R4] (Reverse Input) (No Check Ball) 3/1987-92 (Round Oil Holes in Bore)	1	8663068
556	77716B	Drum, [4L60E] (Reverse Input) (No Check Ball) 1993-Up (Square Oil Holes in Bore) (*Retros to 1987-Up)	1	8681295
564	K77764	Piston Kit, [700R4 / 4L60E] (Input Drum) 1982-92 (*Except 2.8L)	1	
564	K77764B	Piston Kit, [700R4 / 4L60E] (Input Drum) 1982-93 (2.8L)	1	
564	K77764A	Piston Kit, [4L60E] (Input Drum) (With 4th Clutch Bonded Piston)	1	
564	K77764BA	Piston Kit, [4L60E] (Input Drum) (With Both Pistons Bonded)	1	
566	K77761	Piston Kit, [700R4] (Reverse Input Drum) (Steel) 1982-2/87	1	
566	K77761A	Piston Kit, [700R4 / 4L60E] (Reverse Input Drum) (Aluminum 3-Clutch) 2/1987-96	1	
567	K77765	Piston Kit, [700R4] (Reverse Clutch) (*Except 2.8L) 1982-86	1	
567	K77765A	Piston Kit, [700R4] (Reverse Clutch) (*2.8L Only) 1982-Up	1	
567	K77765B	Piston Kit, [700R4] (Reverse Clutch) (*Except 2.8L) 1987-Up	1	
567	K77765C	Piston Kit, [4L60E] (Low / Reverse Clutch) (4.3L & V-8) 1992-Up	1	
567	K77765D	Piston Kit, [4L60E] (Low / Reverse Clutch) (*All V-6 Except 4.3L) 1992-Up	1	
574	77812A	Clutch Hub, [700R4 / 4L60E] (Overrun) 1982-Up	1	

582	77747	Planet, [700R4] (Front) (4 Gear) (With Round Washers) (*Uses a 2-Tab Washer # 235)	1	8654329
582	77747A	Planet, [700R4 / 4L60E] (Front) (4 Gear) (With Bat Wing Washers) (*Does Not Use 2-Tab Washer #235)	1	24212177
582	77747B	Planet, [700R4 / 4L60E / 4L65E] (Front) (5 Gear) (*Retro Fit)	1	
583	K77747A	Planet Kit, [700R4 / 4L60E] (Front) (With 612, 582, 592, 602)	1	
584	77731A	Planet, [700R4 / 4L60E] (Rear) (4 Gear) (With Bat Wing Washers) (With Oil Slinger)	1	
584	K77731A	Planet Kit, [700R4 / 4L60E] (Rear) (4 Gear) (Bat Wing Washer Type) (With Oil Slinger) (Planet, Sun Gear, Ring Gear, Hub, & Bearing)	1	
584	77731	Planet, [700R4 / 4L60E] (Rear) (4 Gear) (With Bat Wing Washers) (Without Oil Slinger)	1	8654200
584	K77731	Planet Kit, [700R4 / 4L60E] (Rear) (4 Gear) (Bat Wing Washer) (Without Oil Slinger) (Planet, Sun Gear, Ring Gear, Hub & Bearing)	1	
584	77731B	Planet, [4L60E / 4L65E] (Rear) (5 Gear) (*Retro Fits All 4 Gear) 9/2002-Up	1	
		PLANETARY COMPONENTS		
584	77731-04	Washer, [700R4 / 4L60E] (Rear Planet Pinion) (Round) (1-Washer)	4	Sonnax
584	77731-05	Washer, [700R4 / 4L60E] (Rear Planet Pinion) (Bat Wing) (1-Washer)	4	Sonnax
584	77731-01	Gear, [700R4 / 4L60E] (Rear Planet Pinion) (1 Gear)	4	Sonnax
584	77731-02K	Pin Kit, [700R4 / 4L60E] (Rear Planet) (4-Per Kit)	1	Sonnax
584	77731-03	Needle Bearing Set, [700R4 /4L60E] (Rear Planet Pinion) (80-Per Set)	1	Sonnax
584	77731RK	Rear Planet Rebuild Kit, [700R4 / 4L60E] (Parts to Rebuild Rear Planet) (Contains: 4-Pinion Gears, 4-Pinion Pins, 80-Roller, 8-Washers (Round), & 8-Bat Wing Washers) **(*Does Not Include 77731-09, Must Order Seperately)**	1	Sonnax
		HARD PARTS (Continued)		
592	77713	Ring Gear, [700R4 / 4L60E] (Input) (1-3/8" Long Clutch Spline) 1982-Up	1	8663639
592	77713A	Ring Gear, [700R4 / 4L60E] (Input) (1-1/2" Long Clutch Spline) 1982-Up	1	
592	77713B	Ring Gear, [700R4 / 4L60E] (Input) (1-5/8" Long Clutch Spline) 1982-Up	1	
594	77730	Ring Gear, [700R4] (Rear Planet) (Early) 1982-Up	1	8667055
594	77730A	Ring Gear, [700R4 / 4L60E] (Rear Planet) (Hardened) (Late) 1982-Up	1	
602	77817	Hub W/Shaft, [700R4 / 4L60E] (Front Ring Gear) (*Uses a Washer) 1982-01	1	8681518
602	77817A	Hub W/Shaft, [4L60E / 4L65E] (Front Ring Gear) (*Uses a Bearing) 2002-Up	1	
604	77825	Hub, [700R4 / 4L60E] (Rear Ring Gear) (Early) (*Can Use 77825A) 1982-Up	1	
604	77825A	Hub, [700R4 / 4L60E] (Rear Ring Gear) (*Cut For Oil Slinger) 1982-Up	1	8654197
612	77824	Sun Gear, [700R4] (Front Planet) E1982	1	
612	77824A	Sun Gear, [700R4 / 4L60E] (Front Planet) L1982-Up	1	8647093
612	77824B	Sun Gear, [4L60E] (Front Planet) (Snaps to Sprag) 2001-Up	1	
614	77748	Sun Gear, [700R4 / 4L60E] (Rear Planet) 1982-Up	1	8642204
624	77749HD	Shell, [700R4 / 4L60E] (Reaction Sun) **(The Monster)** 1982-Up	1	
624	A77749HD	Shell, [700R4 / 4L60E] (Reaction Sun) **(The Beast)** 1982-Up	1	42298B
624	77749	Shell, [700R4 / 4L60E] (Reaction Sun) (Washer Type) (OEM "Hardened") 1982-Up	1	24228345
624	77749A	Shell, [4L60E / 4L65E] (Reaction Sun) (Bearing Type) (OEM) 2001-Up	1	24229604
630	35729	Center Support, [700R4] (Outer Race) (Narrow Sprag Type) 1982-85	1	8663094
630	77729	Center Support, [700R4 / 4L60E] (Outer Race) (Wide) 1986-98	1	8681727
631	K35727	Center Support Assemby, [700R4] (Narrow Sprag) 1982-85	1	
631	K77727	Center Support Assembly, [700R4 / 4L60E] (Sprag, Center Support, Low / Reverse Piston) 1982-Up	1	8681727
639	77815	Clip, [700R4 / 4L60E] (Center Support) (Anti-Clunk Spring)	1	6261415
		SPRAGS & ONE WAY CLUTCHES		
648	K77725	Sprag Assembly, [700R4] (2nd Design) (26-Element) L1982-86	1	
648	K77729	Sprag Assembly, [700R4 / 4L60E] (3rd Design) (28-Element) 1987-Up	1	8657928

648	K77729HD	Sprag Assembly, [4L60E] (6th Design) (With Press in Sun Gear) 1997-Up	1	
654	35727	Sprag, [700R4] (Low / Reverse) (Narrow) 1982-85	1	6261305
654	77727	Sprag, [700R4 / 4L60E] (Low / Reverse) (Wide) 1986-Up	1	8681727
631	K77727	Center Support Assembly, [700R4 / 4L60E] (Sprag, Center Support, Low / Reverse Piston) 1982-Up	1	
658	77725	Sprag, [700R4] (Forward Clutch) (26-Elements) 1982-86	1	10121024
658	77725B	Sprag, [4L60E] (Forward Clutch) (29-Elements) (Dual Cage) 1987-Up	1	
658	77725C	Sprag, [4L60E] (Forward Clutch) (29-Elements) (Plastic) (Single Cage)	1	
		HARD PARTS (Continued)		
664	35726	Inner Race, [700R4] (Low / Reverse Sprag) 1982-Up	1	8673300
669	77823A	Outer Race, [700R4 / 4L60E] (Forward Sprag) L1982-Up	1	24210961
678	77737	Output Shaft, [700R4] (18-1/8" Long) 1982-91	1	8647951
678	77743C	Output Shaft, [700R4] (18-1/4" Long) (With Electric Pick-Up) 1987-92 (4-1/2" Long Splines) (*Will Work for 3-1/2" Long Splines) (With Governor Gear)	1	
678	77734AA	Output Shaft, [4L60E] (18-1/4" Long) (No Governor Gear) 1992-Up (4-1/2" Long Splines)	1	
678	77734AB	Output Shaft, [4L60E] (18-1/4" Long) (No Governor Gear) 1992-Up (3-1/2" Long Splines)	1	
678	77738	Output Shaft, [700R4] (4X4) (13-1/4" Long) (2.8L) 1982-92	1	
678	77743B	Output Shaft, [4L60E] (4X4) (13-1/4" Long) (No Governor Gear) 1992-Up	1	
678	77742	Output Shaft, [700R4] (17-1/2" Long) (Corvette) 1982-84	1	
678	77743	Output Shaft, [700R4] (17-1/4" Long) (Corvette) 1985-92	1	
680	77410	Governor, [700R4] (Gas) (Black) (*Fits 250, 305 & 350 Engine) 1982-93	1	
680	77410A	Governor, [700R4] (Gas) (Pink) 1982-93	1	
680	77410B	Governor, [700R4] (Inner & Outer Weight Is .247" Thick) 1982-93	1	24202116
680	77410D	Governor, [700R4] (Inner & Outer Weight Is .330" Thick) (Diesel) 1982-93	1	8642729
680	77410C	Governor, [700R4] (Inner & Outer Weight Is .187" Thick) (Inner Weight Pointed & Outer Weight has Cut-Out) (Corvette & Police) 1982-93	1	24202119
680	77410E	Governor, [700R4] (Inner & Outer Weight Is .187" Thick) (With Square Inner Weight) 1982-93	1	8642750
680	77410F	Governor, [700R4] (Inner & Outer Weight Is .187" Thick) (Inner Weight Pointed, Outer weight has No Cut-Out) 1982-93	1	
	K35413	Governor Kit, [700R4] (Springs & Weights) 1982-Up	1	Superior
684	K77411	Gear, [700R4] (Governor With Pin) 1982-91	1	8663995
686	35409	Cover, [700R4] (Governor) 1982-91	1	8767827
687	77412	Clip, (Bail) [700R4] (Holds Governor Cover on) 1982-91	1	6260040
		VALVE BODIES (REBUILT)		
740	GM-4616	Valve Body, [700R4 / 4L60E] (Hydraulic TCC) (Non- Auxiliary) 1987-92	1	
740	GM-4617	Valve Body, [700R4 / 4L60E] (Electric With TCC Bore) (Auxiliary) 1987-92	1	
740	GM-4618	Valve Body, [700R4 / 4L60E] (Electric Without TCC Bore) (Auxiliary) 1987-92	1	
740	GM-4618B	Valve Body, [700R4 / 4L60E] (Auxiliary) (3-Check ball) 1993	1	
740	GM-4619	Valve Body, [4L60E] (Non-PWM) (4-Soleniods) 1993-94	1	
740	GM-4620	Valve Body, [4L60E] (PWM) (5-Solenoids) 1995	1	
740	GM-4621	Valve Body, [4L60E] (PWM) (5-Solenoids) 1996-00	1	
740	GM-4642	Valve Body, [4L60E] (PWM) (5-Solenoids) (Casting Change) 2001-02	1	
740	GM-4643	Valve Body, [4L60E] (PWM) (5-Solenoids) (*Updated EPC Connector) 2003-Up	1	
		VALVE BODIES		
740	77754	Valve Body, [700R4] (No Switch) 1982-E87	1	

740	77754A	Valve Body, [700R4] (1-Switch) 1982-E87	1	
740	77754B	Valve Body, [700R4] (2-Switch) 1982-E87	1	
740	77754C	Valve Body, [700R4] (3-Switch) 1982-E87	1	
740	77754D	Valve Body, [700R4] (4-Switch) 1982-E87	1	
740	77754E	Valve Body, [700R4] (No Switch) (Auxiliary Type) L1987-93	1	
740	77754N	Valve Body, [700R4] (1-Switch) (Auxiliary Type) L1987-93	1	
740	77745M	Valve Body, [700R4] (2-Switch) (Side By Side 1/2" Apart) (Auxiliary Type) L1987-92	1	
740	77754L	Valve Body, [700R4] (2-Switch) (2-3/4" Apart) (Auxiliary Type) L1987-92	1	
740	77754K	Valve Body, [700R4] (3-Switch) (Auxiliary Type) L1987-92	1	
740	77754P	Valve Body, [700R4] (4-Switch) (Auxiliary Type) L1987-92	1	
740	77754F	Valve Body, [4L60E] (4-Switch) (Aluminum) (4-Switch Not Counting Manifold Pressure Switch) 1992-94	1	
740	77754G	Valve Body, [4L60E] (5-Switch) (Aluminum) (5-Switch Not Counting Manifold Pressure Switch) 1995	1	
740	77754J	Valve Body, [4L60E] (5-Switch) (Aluminum) (With Vented Manual Valve) 1996-00	1	
740	77754JA	Valve Body, [4L60E] (5-Switch) (Aluminum) (With Vented Manual Valve) 2001-02	1	
740	77754JB	Valve Body, [4L60E] (5-Switch) (Aluminum) (With Vented Manual Valve) 2003-Up (*Uses a Solenoid # 435 With 2-Prong Plastic Connector on Side of Solenoid)	1	
		VALVE BODY COMPONENTS		
741	77714	Filter, [4L60E] (Shift Solenoid) (Snaps on Body Plate) (Small)	1	8683769
741	77717	Filter, [4L60E] (Presssure Control Solenoid) (Snaps on Valve Body Plate) (Large)	1	8683768
741	K77908-4V	Valve, [700R4] (4th Shift) (*Allows 3-4 Shift at Maximum Throttle)	1	Transgo
741	13924X	Check Ball, [700R4 / 4L60E] (Valve Body) (Steel) (.250")	9	6261179
741	77870	Pin, [700R4] (Holds Valve Sleeves in Valve Body)	1-10	8628400
741	77894	Sleeve, [700R4] (Boost Valve Plunger) (Valve Body)	1	Superior
741	77777M-K	Accumulator Assembly, [700R4 / 4L60E] (.341" Valve, Sleeve, Plug, & 3-Springs)	1	Sonnax
741	77777L-K	Accumulator Assembly, [700R4 / 4L60E] (.330" Valve, Sleeve, Plug, & 3-Springs)	1	Sonnax
741	77777K-K	Accumulator Assembly, [700R4 / 4L60E] (.315" Valve, Sleeve, Plug, & 3-Springs)	1	Sonnax
741	77754-39	End Plug, [4L60E / 4L65E] (Actuator Feed Limit Valve) (5-Per Pack)	1	Sonnax
741	77754-09K	Limit Valve Kit, [4L60E] (Actuator Feed) (Fixes Wrong Gear Starts, Clutch / Band Failure) **(*Requires 77754-TL)**	1	Sonnax
	77754-TL	Reamer, [4L60E] (*For 77954-09KK)	1	Sonnax
741	10000-08	Check Ball, [700R4 / 4L60E] (Valve Body) (.250") (Torlon)	AR	
741	10000-11	Check Ball, [700R4 / 4L60E] (Valve Body) (.375") (Torlon)	1	
741	77754-21	Plug, [4L60E] (Forward / Reverse Abuse Bore Plug)	1	Sonnax
741	K77914	Spring/Sleeve Kit, [4L60E] (3-2 Downshift Valve Spring & Stop Sleeve) (3-Springs & 3-Sleeves)	1	Superior
741	77754-23	Spring, [4L60E / 4L65E] (3-2 Control Valve)	1	Sonnax
741	77964-04K	Valve Kit, [4L60E] (Oversize 4-3 Sequence Valve) (3-4 Relay Valve) (End Plug & O-Ring)	1	Sonnax
	77964-RM2	Reamer, (*For 77964-04K)	1	Sonnax
741	77683	Valve, [4L60E] (Manual) (4-5/8" Long) 1992-97	1	
741	77683A	Valve, [4L60E] (Manual) (5-3/8" Long) 1998-Up	1	
741	77968-02	Valve, [700R4] (Throttle Valve) (OE Style)	1	Sonnax
741	6242CS	Spring, [700R4] (Anti Stick Throttle Valve)	1	
741	77968	Valve, [700R4] (Oversize Throttle Valve) **(*77968-RM Reamer Required)**	1	Sonnax
	77968-RM	Reamer, [700R4] (*For 77968)	1	Sonnax
741	77968-01K	Spring, [700R4] (Throttle Valve Plunger Valve) (5-Per Pack) 1982-86	1	Sonnax

TH700-R4/4L60E/4L65E

741	77966-93K	Throttle Valve Plunger & Sleeve Kit, [700R4] (93 Version)	1	Sonnax
741	77966-94K	Throttle Valve Plunger & Sleeve Kit, [700R4] (94 Version)	1	Sonnax
741	77966-94MK	Throttle Valve Plunger & Sleeve Kit, [700R4] (Hi-Performance)	1	Sonnax
741	77754HD	"Corner" Valve Body Plate Saver, [700R4 / 4L60E] (Inserts Between Accumulator Cover to Valve Body Plate)	1	
	77831	Capsule TCC Pump Orifice, [4L60E] (P1870 Code Fix) 1996-Up	1	Teckpak
741	4L6-ISO-3	Valve, [4L60E] (Isolator) (Longer Oversize) (*For GM / SRTA Transmission) (3-Valves Per Kit)	1	Transgo
741	77754-ISO	Sleeve, [4L60E] (Isolator Valve) (For Bore Wear) **(*Requires 77754-SERV & 77754-RM5 Tools)**	1	Sonnax
741	77754	Valve, [4L60E] (Torque Converter Clutch) (*P1870 Code Fix) 1996-99	1	Teckpak
741	77754A	Valve, [4L60E] (Torque Converter Clutch) (*P1870 Code Fix) 2000-02	1	Teckpak
	77754-SERV	Reamer, [4L60E] (Isolator Valve Sleeve) (*For 77754-ISO) (*For GM Serv Valve Bodies)	1	Sonnax
	77754-RM5	Reamer, [4L60E] (Isolator Valve Sleeve) (*For 77754-ISO)	1	Sonnax
741	77754-03K	Valve Kit, [4L60E] (Torque Converter Clutch Regulator) (With Sleeve) 1993-97 **(*Requires Reamer 77754-R2)**	1	Sonnax
741	77754-04K	Valve Kit, [4L60E] (Torque Converter Clutch Regulator) (With Sleeve) 1998-Up **(*Requires Reamer 77754-R2)**	1	Sonnax
	77754-R2	Tool, [700R4] (Reamer For Oversize Torque Converter Clutch Regulator Valve)	1	Sonnax
741	K77909HP	Lock-Up Kit, [700R4] (Lockup in 4th Gear Only Kit) (in Valve Body)	1	8642970
741	VB101-5	Repair Kit, (Fixes 5-Valve Body Plate Holes) (Most With 1/4" Check Balls)	1	Teckpak
744	77855	Auxiliary Valve Body, [700R4] (Aluminum) (With Cast Iron 3-Bolt Cover) 1982-91	1	
		HARD PARTS (Continued)		
747	700-P	Plate, (Universal) [700R4 / 4L60] (Valve Body) 1982-Up	1	Transgo
747	46-PLT-94	Plate, (Universal) [4L60E] (Valve Body) 1993-94	1	Transgo
747	46-PLT-95	Plate, (Universal) [4L60E] (Valve Body) 1995 Only*	1	Transgo
747	46-PLT-96	Plate, (Universal) [4L60E] (Valve Body) 1996-06	1	Transgo
747	46-PLT-05V	Plate, [4L60E] (*Corvette Only) 2005	1	Transgo
747	46-PLT-07	Plate, [4L60E] (*Except Hybrid) 2007-08	1	Transgo
747	46-PLT-09	Plate, [4L60E] 2009	1	Transgo
747	77883A	Plate, [700R4] (Valve Body) (Stamped- P) 1982-86 (*All 1982-86 Retro Fit)	1	8654482
747	77883	Plate, [700R4] (Valve Body) (Stamped- S) 1982-86 (*All 1982-86 Retro Fit)	1	8654483
747	77884	Plate, [700R4] (Valve Body) (Stamped- T) 1982-86 (*All 1982-86 Retro Fit)	1	8654484
747	77887	Plate, [700R4] (Valve Body) (Stamped- AD) (Auxiliary Type) 1987	1	8663587
747	8663589	Plate, [700R4] (Valve Body) (Stamped- AF) (Auxiliary Type) 1987	1	8663589
747	8663595	Plate, [700R4] (Valve Body) (Stamped- AM) (Auxiliary Type) 1987	1	8663595
747	77875C	Plate, [700R4] (Valve Body) (Stamped- BD) (Auxiliary Type) 1988-91	1	8667355
747	8667354	Plate, [700R4] (Valve Body) (Stamped- BE) (Auxiliary Type) 1988-91	1	8667354
747	77875A	Plate, [700R4] (Valve Body) (Stamped- BF) (Auxiliary Type) 1988-91	1	8667356
747	77876	Plate, [700R4] (Valve Body) (Stamped- BM) (Auxiliary Type) 1988-91	1	8667357
747	8667825	Plate, [700R4] (Valve Body) (Stamped- BS) (Auxiliary Type) 1988-91	1	8667825
747	8667363	Plate, [700R4] (Valve Body) (Stamped- BT) (Auxiliary Type) 1988-91	1	8667363
747	77875B	Plate, [700R4] (Valve Body) (Stamped- BU) (Auxiliary Type) 1988-91	1	8667475
747	77875	Plate, [700R4] (Valve Body) (Stamped- BV) (Auxiliary Type) 1988-91	1	8673139
747	8667700	Plate, [700R4] (Valve Body) (Stamped- BX) (Auxiliary Type) 1988-91	1	8667700
747	8680144	Plate, [700R4] (Valve Body) (Stamped- EA)	1	8680144
747	8686041	Plate, [4L60E] (Valve Body) (Stamped- KX)	1	8686041
747	24201478	Plate, [4L60E] (Valve Body) (Stamped- LM)	1	
747	24201479	Plate, [4L60E] (Valve Body) (Stamped- LN)	1	

747	24201485	Plate, [4L60E] (Valve Body) (Stamped- MS)	1	
747	24201488	Plate, [4L60E] (Valve Body) (Stamped- MV)	1	
747	24244047	Plate, [4L60E] (Valve Body) (Stamped- PC) (*Replaced By 1PC)	1	
747	24203225	Plate, [4L60E] (Valve Body) (Stamped- PD)	1	
747	24203949	Plate, [4L60E] (Valve Body) (Stamped- PN)	1	
747	24204435	Plate, [4L60E] (Valve Body) (Stamped- PX)	1	
747	24204438	Plate, [4L60E] (Valve Body) (Stamped- PY)	1	
747	77876C	Plate, [4L60E] (Valve Body) (Stamped- PZ)	1	
747	24244057	Plate, [4L60E] (Valve Body) (Stamped- TA) (*Replaced By 1HA)	1	
747	24244059	Plate, [4L60E] (Valve Body) (Stamped- TC, 1TC) (*Replaced By 1HC)	1	
750	77381A	Bell Housing, [4L60E] (4.3L) (V-6 & V-8) (Cast # 24200877) 1996-97	1	
750	77381B	Bell Housing, [4L60E] (4.3L) (V-6 & V-8) (Cast # 24206579) 1998-Up (Starter at 8:30) (Has 4-Extra Dust Cover Bolts)	1	24206580
750	77381C	Bell Housing, [4L60E] (V-8) (Cast # 24206952) 1998-Up (Starter at 8:30) (*Uses 7-Bolts to Motor)	1	24206953
750	77381D	Bell Housing, [4L60E] (V-8) (Holden) (Starter at 4:00) 1998-Up	1	24206438
750	77381F	Bell Housing, [4L60E] (Square top) (Starter at 4:00) (Cast # 24205617) 1998-Up	1	
750	77381G	Bell Housing, [4L60E] (Round Bell, Corvette) 1997-98	1	
750	77381H	Bell Housing, [4L60E] (Starter at 1:00) (V-8) (Top Bolts 5-1/2") (Cast # 24209836)	1	
750	77381J	Bell Housing, [4L60E] (Starter At 2:00) (V-8) (Top Bolts 5-1/2") (Cast # 2420855)	1	
760	77701	Case, [700R4] (2WD) (*All Except 2.8L) (Non Auxiliary) 1982-E87	1	
760	77701A	Case, [700R4] (2WD) & (4X4) (2.8L) (*V-6 only) (Non Auxiliary) 1982-E87	1	
760	77701B	Case, [700R4] (4X4) (*All Except 2.8L) (Non Auxiliary) 1982-E87	1	
760	77701C	Case, [700R4] (2WD) (*All Except 2.8L) (Auxiliary Type) L1987-91 (*Also Fits 4.3L In Full Size Truck)	1	
760	77701D	Case, [700R4] (2WD) & (4X4) (2.8L) (*V-6 only) (Auxiliary Type) L1987-91	1	
760	77701E	Case, [700R4] (4X4) (*All Except 2.8L) (Auxiliary Type) L1987-91	1	
760	77701EA	Case, [700R4] (2WD) & (4X4) (*4.3L In S-10 Truck Only) L1987-91 (With Ears Cut Off)	1	
760	77701H	Case, [4L60E] (2WD) (4.3L In Full Size Truck) 1992-95 (With 1-Piece Case)	1	8686951
760	77701J	Case, [4L60E] (2WD) (*All V-8 In Full Size Truck) 1992-95 (With 1-Piece Case)	1	
760	77701L	Case, [4L60E] (2WD) (*All V-8 In Full Size Truck) 1996 (With 1-Piece Case) (With PRNDL Switch)	1	
760	77701LA	Case, [4L60E] (2WD) (*All V-8 In Full Size Truck) 1996 (With 1-Piece Case) (With PRNDL Switch & Shift Cable Bosses)	1	
760	77701N	Case, [4L60E] (2WD) (4.3L In Full Size Truck) (With 1-Piece Case) (With PRNDL Switch) 1996	1	
760	77710NA	Case, [4L60E] (2WD) (*4.3L In Truck Except S-10) 1996 (With 1-Piece Case) (With PRNDL Switch & Shift Cable Bosses)	1	
760	77701K	Case, [4L60E] (4X4) (*All V-8 In Full Size Truck) 1992-95 (With 1-Piece Case)	1	
760	77701KA	Case, [4L60E] (4x4) (4.3L In Full Size Truck) 1992-95 (With 1-Piece Case)	1	
760	77701M	Case, [4L60E] (4x4) (*All V-8 In Full Size Truck) 1996 (With 1-Piece Case) (With PRNDL Switch)	1	
760	77701MA	Case, [4L60E] (4x4) (*All V-8 In Full Size Truck) 1996 (With 1-Piece Case) (With PRNDL Switch & Shift Cable Bosses)	1	
760	77701HA	Case, [4L60E] (2WD) & (4x4) (4.3L In S-10) (V-8 Camaro & Firebird) 1992-95 (With 1-Piece Case)	1	
760	77701HB	Case, [4L60E] (2WD) & (4x4) (4.3L In S-10) (V-8 Camaro & Firebird) 1996 (With 1-Piece Case) (With PRNDL Switch)	1	

760	77701HC	Case, [4L60E] (2WD) & (4x4) (4.3L In S-10 Truck) 1996 (With 1-Piece Case) (With PRNDL Switch & Shift Cable Bosses) (*Also Fits V-8 Camaro & Firebird) 1996	1	
760	77701P	Case, [4L60E] (2WD) & (4x4) (2.2L / 3.4L) 1992-95 (With 1-Piece Case)	1	24200360
760	77701PA	Case, [4L60E] (2WD) & (4x4) (2.2L / 3.4L) 1996 (With 1-Piece Case) (With PRNDL Switch)	1	
760	77701PB	Case, [4L60E] (2WD) & (4x4) (2.2L / 3.4L) 1996 (With 1-Piece Case) (With PRNDL Switch & Shift Cable Bosses)	1	
760	77701G	Case, [4L60E / 4L65E] (Bolt-on Type Bell) (Outer Pump Seal is an O-Ring) 1995-03	1	
760	77701GC	Case, [4L60E / 4L65E] (Bolt-on Type Bell) (Outer Pump Seal is an O-Ring) (*This is for a Corvette, With Rear Mounting Bosses on each side) 1995-Up	1	
760	77701GA	Case, [4L60E / 4L65E] (Bolt-on Type Bell) (Outer Pump Seal Is Metal / Rubber Compression Type) 2004-07	1	
760	77701GB	Case, [4L60E / 4L65E] (Bolt-on Type Bell) (Outer Pump Seal is Metal / Rubber Compression Type) 2008-Up	1	
		CASE COMPONENTS		
761	77978	Capsule W/Check Ball, [700R4 / 4L60E] (3-4 Accumulator) (Fits in Case) 1987-96	1	8634400
761	77979	Ball & Capsule, [700R4 / 4L60E] (3rd Accumulator) (*Improve 2-3 Shift Feel) (In Case Under Valve Body)	1	Sonnax
761	77890	Ball & Capsule, [700R4 / 4L60E] (In Case Under Low / Reverse Piston) 1988-Up	1	8663890
995	65168	Cup Plug, [700R4 / 4L60E] (Park Pawl Shaft)	1	8620318
	30130	GM (E-Clips)	1	
761	K35354	Case Saver, [700R4 / 4L60E] (4-Piece Type) (4-Per Pack)	1	
761	35350	Case Saver, [700R4 / 4L60E] (1-Piece)	1	
		HARD PARTS (Continued)		
765	77801	Pan, [700R4 / 4L60E] (Bottom) (*Uses a Round Magnet) 1982-96	1	86638948
765	77801B	Pan, [4L60E / 4L65E] (Bottom) (Trucks & Vans) 1997-12/2003	1	
765	77801A	Pan, [4L60E] (Bottom) (Corvette) (Round Center Pump) 1997-Up	1	
765	77801C	Pan, [4L60E / 4L65E] (Bottom) (Trucks & Vans) 12/2003-Up (*No Drain Plug) (Has Integral Dipstick Stop)	1	
770	77759	Extension Housing, [700R4 / 4L60E] (2WD) (7-1/4" Long) (2-Bolt Mount on Bottom) 1982-95	1	
770	77759A	Extension Housing, [700R4 / 4L60E] (2WD) (No Mount or Bracket) 1982-95	1	8673406
770	77759B	Extension Housing, [700R4 / 4L60E] (2WD) (2-Hole Side Bracket Type) 1982-95	1	
770	77760	Extension Housing, [700R4 / 4L60E] (2WD) (3-Hole Side Bracket Type) 1982-95	1	
770	77760A	Extension Housing, [700R4 / 4L60E] (4x4) (For 208 & Various New Process Transfer Cases) 1982-98 (4-Bolts to Case) (Cast Iron) (Cast # 15629188) (3-1/2" From Gasket to Gasket) (*Mount Surface Does Not Hang Below Gasket)	1	
770	77760AA	Extension Housing, [700R4 / 4L60E] (4x4) (For 208 Transfer Case) 1982-95 (4-Bolts to Case) (Cast Iron) (Cast # 14020853) (4-15/16" Gasket to Gasket) (10-5/8" From Top Center Bolt Down to Mount)	1	
770	77760AB	Extension Housing, [700R4 / 4L60E] (4x4) (For 208 Transfer Case) 1982-95 (4-Bolts to Case) (Cast Iron) (Cast # 14038663) (3-1/4" Gasket to Gasket) (10-5/8" From Top Center Bolt Down to Mount)	1	
770	77760BA	Extension Housing, [700R4 / 4L60E] (4x4) (For 207/231 Transfer Case) 1982-95 (4-Bolts to Case) (Aluminum With Side Threaded Holes) (Cast # 14040514)	1	
770	77760B	Extension Housing, [700R4 / 4L60E] (4x4) (For 207 Transfer Case) 1982-95 (4-Bolts to Case) (Aluminum Without Side Threaded Holes)	1	
770	77759AA	Extension Housing, [4L60E] (2WD) (4-Bolts to Case) (No Mount/Bracket) (With 1" Speed Sensor Hole) 1996-97	1	
770	77759AB	Extension Housing, [4L60E] (2WD) (4-Bolts to Case) (2-Bolt Bottom Mount) (With 1" Speed Sensor Hole) 1996-97	1	
770	77760AC	Extension Housing, [4L60E] (2WD) (4-Bolts to Case) (3-Bolt Side Bracket) (With 1" Speed Sensor Hole) 1996-97	1	
770	77760C	Extension Housing, [700R4 / 4L60E] (2WD) (Corvette) 1982-95	1	8682456

770	77760D	Extension Housing, [4L60E] (2WD) (9-5/8" Long) (6-Bolts to Case) (2-Bolt Bottom Mount) (With 1" Speed Sensor Hole) 1996-Up	1	
770	77760DC	Extension Housing, [4L60E] (2WD) (9-5/8" Long) (6-Bolts to Case) (2-Bolt Bottom Mount) (With 3-Bolt Side Bracket) (With 1" Speed Sensor Hole) 1996-Up	1	
770	77760E	Extension Housing, [4L60E] (4x4) (6-Bolts to Case) (4" Long) 1996-Up (Cast # 15963696)	1	
770	77760EA	Extension Housing, [4L60E] (4x4) (6-Bolts to Case) (4" Long) 1996-Up (Cast # 15963697)	1	
770	77760EB	Extension Housing, [4L60E] (4x4) (6-Bolts to Case) (4" Long) 1996-Up (Cast #15028096)	1	
770	77760EC	Extension Housing, [4L60E] (4x4) (6-Bolts to Case) (4" Long) 1996-Up (Cast # 15028097)	1	
770	77760F	Extension Housing, [4L60E] (4x4) (6-Bolts to Case) (4-1/2" Long) 1996-Up (Cast # 15724744)	1	
770	77760FA	Extension Housing, [4L60E] (4x4) (6-Bolts to Case) (4-1/2" Long) 1996-Up (Cast # 1597197)	1	
770	77760G	Extension Housing, [4L60E] (4x4) (6-Bolts to Case) (5" Long) (Aluminum) (6-Bolts to Transfer Case) (Cast # 15005474) 1996-Up	1	
770	77760GA	Extension Housing, [4L60E] (4x4) (6-Bolts to Case) (5" Long) (Aluminum) (6-Bolts to Transfer Case) (Cast # 15726252) 1996-Up	1	
774	35922A	Speed-O-Meter Housing, [700R4] (*For 39 Teeth Gear or Less)	1	
774	77839	Speed-O-Meter Housing, [700R4] (*For 40 Teeth Gear or More)	1	
774	77839A	Speed-O-Meter Housing, [700R4] (2"OD Plastic) (For Metal Shaft Gear) (2-1/4" Long)	1	
774	77839B	Speed-O-Meter Housing, [700R4] (2"OD Aluminum) (2-Prong) (Gear Type, Inline Plug-in)	1	
774	77839C	Speed-O-Meter Housing, [700R4] (2"OD Plastic) (Cable Type)	1	
774	77839D	Speed-O-Meter Housing, [700R4] (2"OD Plastic) (2-Prong) (Gear Type, Offset Plug-in)	1	
	11589040	Bolt, [700R4 / 4L60E / 4L65E] (Converter) (15mm Hex Head) Up to 2002	3-6	
776	77879	Bolt, [4L60E] (Holds Bell Housing to Case) 1996-Up	8	24203265
776	K77879	Bolt Set, [4L60E] (Bell Housing to Case) (8-Per Set)	1	24233360
839	34996	Magnet, [700R4 / 4L60E] (Pan) (Rectangular)	1	
	77980-01K	Bracket, [4L60E] (Wire Harness Connector)	1	Sonnax
	34913-01	Bracket, [4L60E] (Shift Cable) (*Uses Pan Bolts) 1996-97 (*Use on 1996-97 Cases With No Shift Cable Bracket Bosses)	1	Sonnax
847		***SEE GM SPEEDO DRIVE GEAR SECTION***		
848		***SEE GM SPEEDO DRIVEN GEAR SECTION***		
849	35741	Clip, [700R4] (Speed-O Drive Gear) (Long Narrow Type)	1	
	K77928	Snap Ring Kit, [700R4 / 4L60E / 4L65E] 1982-Up	1	57680
861	77777A	Snap Ring, [700R4 / 4L60E] (Holds 3-4 Pressure Plate In) (.089")	1	8663636
861	77777	Snap Ring, [700R4 / 4L60E] (Holds 3-4 Pressure Plate In) (.062")	1	
876	77552	Snap Ring, [700R4 / 4L60E] (Holds Forward Pressure Plate in Drum)	1	8642170
877	77553	Snap Ring, [700R4 / 4L60E] (Holds Overrun Retainer)	1	
881	77551	Snap Ring, [700R4 / 4L60E] (Holds Sprag Together)	1	8647083
882	77554	Snap Ring, [700R4 / 4L60E] (Holds Front Planet Ring Gear to Hub)	1	8642201
883	35552	Snap Ring, [700R4 / 4L60E] (Holds Center Support in Case)	1	6261416
884	35560	Snap Ring, [700R4 / 4L60E] (Holds Sprag to Center Support)	2	6261051
886	77797	Snap Ring, [700R4 / 4L60E] (Holds Low / Reverse Retainer in) (*Also Fits Sun Gear to Bowl)	1	8681553
886	35555	Snap Ring, [700R4 / 4L60E] (Holds Low / Reverse Retainer-Corvette)	1	6261041
889	77799	Snap Ring, [700R4 / 4L60E] (Holds Hub to Rear Ring Gear)	1	8642220
892	77555	Snap Ring, [700R4 / 4L60E] (Holds Reverse Input Pressure Plate in)	1	8667022
893	77556	Snap Ring, [700R4 / 4L60E] (Holds Retainer to Reverse Input)	1	8628059
894	77798	Snap Ring, [700R4 / 4L60E] (Holds Front Planet to Output Shaft)	1	8654141
896	77557	Snap Ring, [700R4 / 4L60E] (Holds 2-4 Servo in Case)	1	8642124

TH700-R4/4L60E/4L65E

900	K77896B	Servo Assembly, [700R4 / 4L60E] (2-4) (Cast # 553)	1	
900	K77896C	Servo Assembly, [700R4 / 4L60E] (2-4) (Cast # 554)	1	
900	K77896	Servo Assembly, [700R4 / 4L60E] (2-4) (Cast D758 # 8642093) (Corvette)	1	
901	77708	Spring, [700R4 / 4L60E] (Servo Return) 1982-95	1	8642273
901	K77970	Spring Kit, [700R4 / 4L60E] (2-4 Servo Return) (Blue) (3-Pieces)	1	Superior
902	77774	Piston, [700R4 / 4L60E] (4th Servo)	1	8642478
902	K034	Piston, [700R4 / 4L60E] (4th Servo) (Super)	1	Superior
902	77767K	Piston, [700R4 / 4L60E] (4th Servo) (Super Hold)	1	Sonnax
904	8642979	Cover, [700R4 / 4L60E] (2-4 Servo)	1	8642979
905	77772	Piston, [700R4 / 4L60E] (2nd Apply Servo) (Cast # 553)	1	8642613
905	77772B	Piston, [700R4 / 4L60E] (2nd Apply Servo) (Cast # 093) (Corvette)	1	8642079
905	K77895	Piston Kit, [700R4 / 4L60E] (2nd Apply Servo) (Corvette) (With Cover) (*Does Not Come With Rings)	1	
905	K77895A	Piston Kit, [700R4] (2nd Apply Servo) (Corvette) (Contains: # 905, 907, (2) # 927 Accumlator Pistons -TV Boost Valve & Sleeve)	1	
905	K77840	Super Servo, [700R4 / 4L60E] (2nd Apply Servo)	1	Superior
	77911-01	Sleeve, [700R4 / 4L60E] (2nd Servo)	1	Sonnax
908	77605E	Pin, [700R4 / 4L60E] (2nd Apply Servo) (Extendo) 1982-96	1	Teckpak
908	77785	Pin, [700R4 / 4L60E] (2nd Apply Servo) (1-Ring) (5.010" Long)	1	
908	77786	Pin, [700R4 / 4L60E] (2nd Apply Servo) (2-Ring) (5.060" Long)	1	
908	77787	Pin, [700R4 / 4L60E] (2nd Apply Servo) (No Ring) (5.121" Long)	1	8680501
908	77787A	Pin, [700R4 / 4L60E] (2nd Apply Servo) (3-Ring) (5.083" Long)	1	
908	77605G	Pin, [4L60E / 4L65E] (2nd Apply Servo) (Extendo) 1997-Up	1	Teckpak
908	77787-02K	Pin, [700R4 / 4L60E] (2nd Apply Servo) (Extra Long)	1	Sonnax
916	77611	Anchor Pin, [700R4 / 4L60E] (Holds Band)	1	
925	K77813	Accumulator Assembly, [700R4] (1-2 Accumulator) (.310"OD Pin) 1982-91	1	
925	K77813A	Accumulator Assembly, [4L60E] (1-2 Accumulator) (.230"OD Pin) 1992-Up	1	
926	77704B	Spring, [700R4 / 4L60E] (1-2 & 3-4 Accumulator) (Orange) (Cone Shaped) (Outer)	1-2	8663385
926	77703C	Spring, [4L60E] (1-2 & 3-4 Accumulator) (Orange) (Inner)	1-2	8685655
926	77704C	Spring, [700R4 / 4L60E] (1-2 & 3-4 Accumulator) (No Color) (Outer)	1-2	8673387
926	77703D	Spring, [4L60E] (1-2 & 3-4 Accumulator) (Pink) (Inner)	1-2	8685656
926	77704	Spring, [700R4 / 4L60E] (1-2 & 3-4 Accumulator) (Purple) (Outer)	1-2	8634163
926	77703A	Spring, [700R4 / 4L60E] (1-2 & 3-4 Accumulator) (Red) (Outer)	1-2	8634703
926	77704A	Spring, [700R4 / 4L60E] (1-2 & 3-4 Accumulator) (Green) (Outer)	1-2	8654554
926	77703E	Spring, [700R4 / 4L60E] (1-2 & 3-4 Accumulator) (No Color) (Inner)	1-2	8684431
926	77703F	Spring, [700R4 / 4L60E] (1-2 & 3-4 Accumulator) (Yellow) (Outer)	1-2	8663384
926	77703B	Spring, [700R4 / 4L60E] (1-2 & 3-4 Accumulator) (White) (Outer)	1-2	8654183
926	77704S	Spring, [700R4 / 4L60E] (1-2 Accumulator) (Hi-Performance) (5 Per Bag)	1	Sonnax
926	77704D	Spring, [4L60E] (1-2 & 3-4 Accumulator) (No Color) (Outer)	1-2	24209794
926	77704E	Spring, [4L60E] (1-2 & 3-4 Accumulator) (Blue) (Outer)	1-2	
927	77998	Piston, [700R4] (1-2 & 3-4 & Forward Accumulator) (.310"OD Pin) 1982-91 (*Also Fits [4L60E / 4L65E] 3-4 Accumulator 1992-Up)	1-3	
927	77998-03K	Piston Kit, [700-4R / 4L60E] (1-2 & 3-4 Accumulator) (With Seals & Balls) (Pinless) 82-Up	1	Sonnax
191	77998-03SK	Replacement Seals, [700R4 / 4L60E] (*For 77998-03K)	1	Sonnax
927	77998A	Piston, [4L60E] (1-2 Accumulator) (.230"OD Pin) 1992-Up	1	8684429
927	77987P	Piston, [4L60E] (Forward Accumulator) (1.770"OD) (.230"OD Pin) 1992-Up (Plastic)	1	24200126
927	77987A	Piston, [4L60E] (Forward Accumulator) (1.770"OD) (.230"OD Pin) 1992-Up (Aluminum)	1	Transgo
927	77987-01K	Piston Kit, [4L60E] (Forward Accumulator) (With Seals & Ball) (Pinless) 1982-Up	1	Sonnax
352	77987-SK	Piston Seals, [700R4 / 4L60E]	1	Sonnax

927	77998E	Piston, [4L65E] (1-2 Accumulator) (Aluminum) (No Legs, Small Hole) (.236"OD Pin)	1	Transgo
929	77813	Cover, [700R4] (1-2 Accumulator) 1982-93	1	8683543
929	77813A	Cover, [4L60E] (1-2 Accumulator) 1993-Up	1	8686084
938	8628273	Pin, [700R4] (3-4 Accumulator) (.310"OD) 1982-Up (*Also Fits [700R4] 1-2 Accumulator) (.310" OD) 1982-91	1	8628273
933	8684426	Pin, [4L60E] (1-2 & Forward Accumulator) (.230 "OD Pin) 1992-Up	1	8684426
933	K061	Pin Kit, [4L60E] (Forward Accumulator) (3 Pins) (Without Rings) 1992-Up	1	Superior
938	77999	Pin Kit, [700R4 / 4L60E] (3-4 Accumulator) (Oversize) (4-Per Kit)	1	Sonnax
938	77999-02K	Reamer Kit, [700R4 / 4L60E] (3-4 Accumulator) (Oversize) (10-Pins & Reamer) 1982-Up	1-2	Sonnax
933	77754-01K	Pin, [4L60E] (Forward Accumulator) (Oversize) (4-Per Kit) (.250"OD)	1-2	Sonnax
933	77754-02K	Reamer Kit, [4L60E] (Forward Accumulator) (Oversize) (10-Pins & Reamer)	1	Sonnax
958	35746	Yoke Tube, [700R4] (With O-Ring) 1982-84	1	6261062
958	77863	Yoke Tube, [700R4 / 4L60E] 1985-Up	1	8654063
960	77763	Piston, [700R4 / 4L60E] (4th Clutch) 1982-93	1	8642135
960	77763A	Piston, [4L60E] (4th Clutch) (With Molded Rubber) 1994-Up (*Retros to 1982)	1	24200290
963	77715	Piston Housing, [700R4 / 4L60E] (Forward Clutch)	1	8654326
964	77764	Piston, [700R4 / 4L60E] (Forward Clutch) 1982-96	1	8683513
964	77764A	Piston, [4L60E] (Forward Clutch) (With Molded Rubber) 1997-Up (*Retros to 1982)	1	24205272
966	77761	Piston, [700R4] (Reverse Input Clutch) (Steel) 1982-86	1	8667841
966	77761B	Piston, [700R4 / 4L60E] (Reverse Input Clutch) (Aluminum 3-Clutch) 1987-96	1	8663071
966	77761A	Piston, [700R4 / 4L60E] (Reverse Input Clutch) (Aluminum 4-Clutch) 1987-96	1	
967	77765	Piston, [700R4] (Low Reverse Clutch) (V-8) 1982-86	1	8642221
967	77765A	Piston, [700R4] (Low / Reverse Clutch) (V-6) 1982-91	1	8642222
967	77765B	Piston, [700R4] (Low / Reverse Clutch) (V-8) 1987-91	1	8685549
967	77765C	Piston, [4L60E] (Low / Reverse Clutch) (4.3L & V-8) 1992-Up	1	
967	77765D	Piston, [4L60E] (Low / Reverse Clutch) (*All V-6 Except 4.3L) 1992-Up	1	
969	77762	Piston, [700R4 / 4L60E] (Overrun Clutch) 1982-96	1	8642148
969	77762A	Piston, [4L60E] (Overrun Clutch) (With Molded Rubber) 1997-Up (*Retros to 1982) (*With 77736A)	1	24205273
970	77924	Release Spring, [700R4 / 4L60E] (3-4 Clutch) 1987-Up	5	8667424
970	K77924	Release Spring Set, [700R4 / 4L60E] (3-4 Clutch) (5-Per Set) 1987-Up	1	
971	77720	Retainer W/Springs, [700R4 / 4L60E] (3-4 Clutch) 1995	1	8685244
971	77720A	Retainer W/Springs, [4L60E] (3-4 Clutch) 1996-Up	1	
971	77720HD	Spring Kit, [700R4 / 4L60E] (3-4 Clutch)	1	Transgo
976	77709	Retainer W/Springs, [700R4 / 4L60E] (Reverse Input Clutch)	1	8647284
977	77735	Retainer W/Springs, [700R4 / 4L60E] (Low / Reverse Clutch)	1	8642227
979	77736	Retainer W/Springs, [700R4 / 4L60E] (Forward Clutch) 1982-96	1	8677876
979	77736A	Retainer W/Springs, [4L60E] (Forward Clutch) 1997-Up	1	24206085
	77173B	Retainer, [700R4 / 4L60E] (3-4 Clutch) (5-Tab) (Tin)	1	8642171
991	77705	Spring, [700R4 / 4L60E] (Manual Detent Spring)	1	
991	77675	Shaft, [700R4 / 4L60E] (Manual Lever) 1982-95	1	8642913
991	77675A	Shaft, [4L60E] (Manual Lever) (*All Units With PRNDL Switch) 1996-97	1	
991	77675B	Shaft, [4L60E] (Manual Lever) (5" Long) 1996-Up (*All Except Camaro / Firebird)	1	
991	77675C	Shaft, [4L60E] (Manual Lever) (4-1/4" Long) 1998 (Camaro / Firebird)	1	
992	77676	Shift Lever, [700R4] (External) (Column Shift)	1	
992	77676A	Shift Lever, [700R4] (External) (Floor Shift)	1	
992	77676B	Shift Lever, [4L60E] (Cast # 15717549) (Has Round Ball Tip) (Cable Bracket That Bolts to Pan)	1	

	77871	Manual Valve Link, [700R4] (3-1/8” Long) 1982-93	1	8654113
	77871A	Manual Valve Link, [4L60E] (2-1/8” Long) 1993-Up	1	8680731
994	77677	Park Rod Actuator, [700R4 / 4L60E] 1982-99	1	
995	K77678	Park Pawl Assembly, [700R4 / 4L60E] (Park Pawl & Spring)	1	
996	75849	Fitting, [700R4 / 4L60E] (Cooler Line) (5/16”) 1982-95	2	8637742
996	34280A	Fitting, [4L60E] (Cooler Line) (Push-In Type) 1996-Up	2	24205102
	34575	Clip, [4L60E] (Cooler Line Fitting) (Metal)	2	
997	77872	Wire Link, [700R4] (Throttle Valve Cable)	1	8642290
	77872-01	Wire Link, [700R4] (Throttle Valve) (*Allows Adjustments)	1	Sonnax
999	77679	Auxiliary Tube, [700R4] (Connects Auxiliary Valve Body to Stator) L1987-91	1	8663615


sonnax®
ZIP KIT™
THE FIRST STEP
IN CORRECTING COMMON SHIFT PROBLEMS
Simple, Drop-In Parts
install quickly & easily without special tools
Stops Hydraulic Leaks
so the valve body works the way it should
In-Depth Tech Booklet
for installation, testing & diagnostics; helps determine if further repairs are needed
Discover the newest Zip Kits at www.sonnax.com
Scan code with your smartphone.
1 Automatic Drive • P.O. Box 440 • Bellows Falls, VT 05101-0440 USA
800-843-2600 • 802-463-9722 • F: 802-463-4059 • www.sonnax.com
© Sonnax Industries, Inc.
Sonnax is an Employee-Owned Company

5L40E/5L50E

RWD 5 Speed

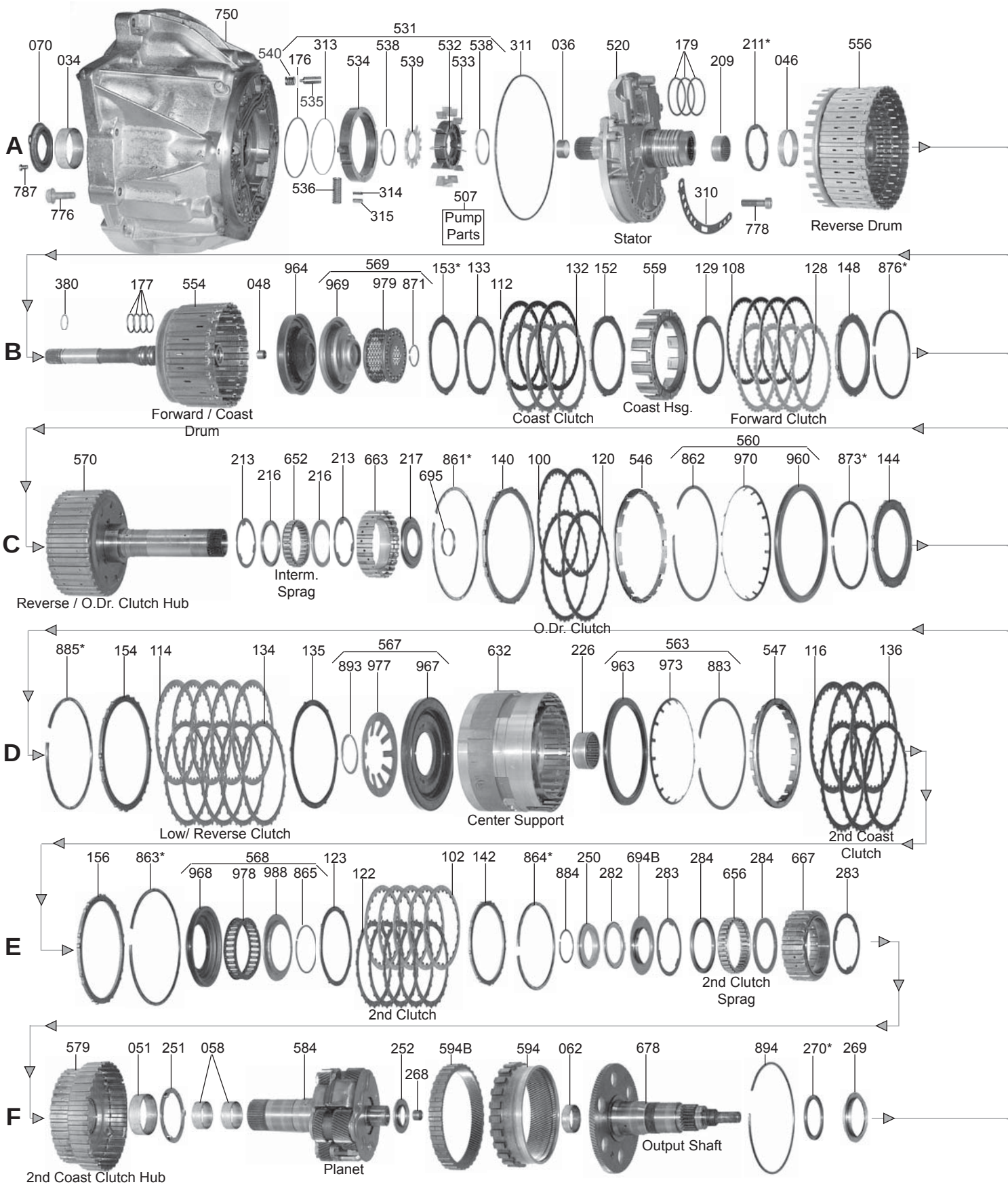

RWD 5 Speed

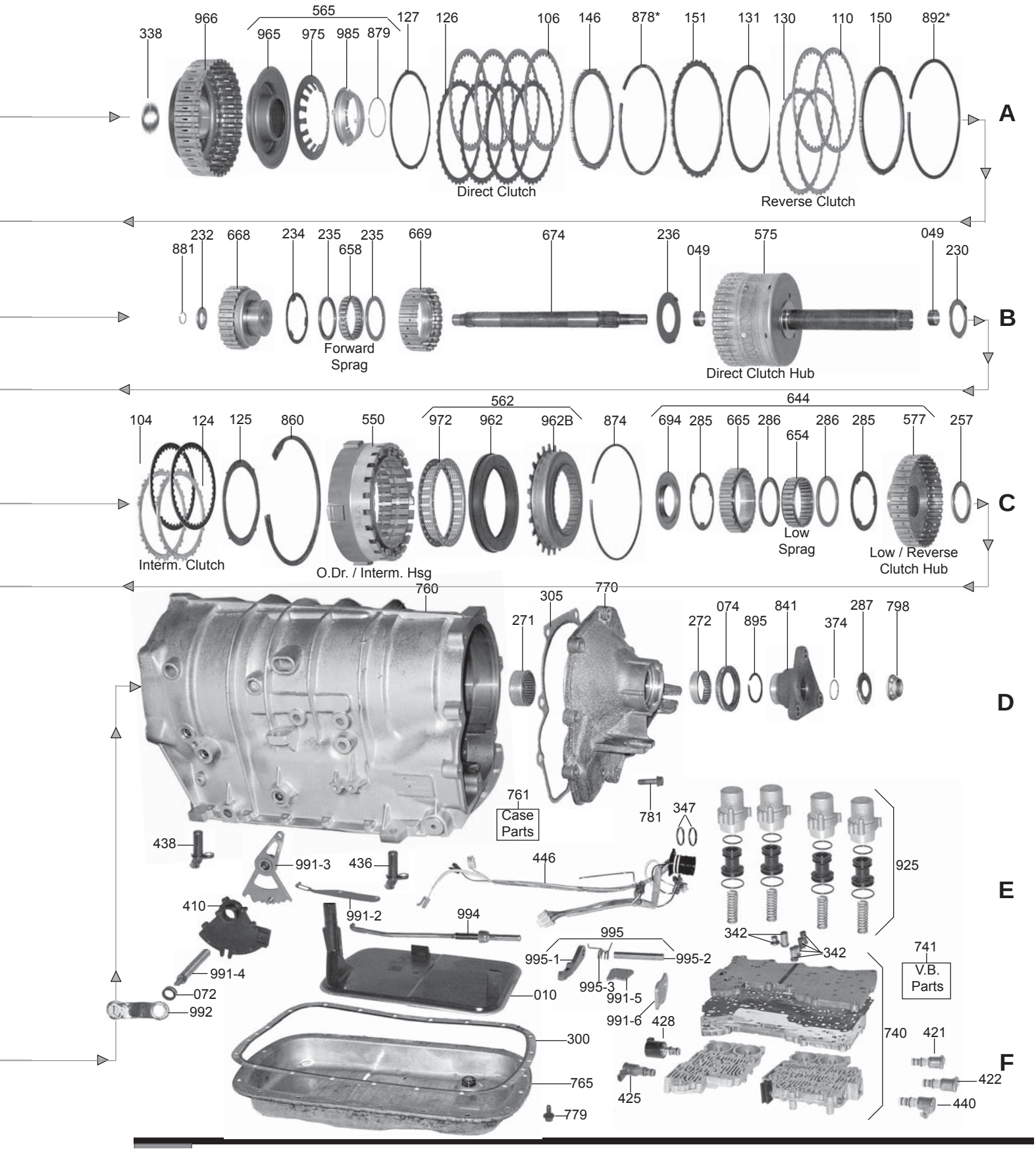
A
338
966
565
965
975
985
879
127
126
106
146
878*
151
131
130
110
150
892*
Direct Clutch
Reverse Clutch
B
881
232
668
234
235
658
235
669
674
236
049
575
049
230
Forward Sprag
Direct Clutch Hub
C
104
124
125
860
550
562
972
962
962B
874
644
694
285
665
286
654
286
285
577
257
Interm. Clutch
O.Dr. / Interm. Hsg
Low Sprag
Low / Reverse Clutch Hub
D
760
305
770
271
074
841
272
895
374
287
798
761
Case Parts
781
347
E
438
991-3
436
446
925
410
991-2
994
995
342
995-1
995-2
342
741
V.B. Parts
995-3
991-5
991-4
072
992
010
991-6
428
740
421
F
300
765
779
425
422
440

5L40E/5L50E

ILL#	PART#	DESCRIPTION	QTY	REF #
		OVERHAUL KIT		
	K55900	Overhaul Kit, [5L40E / 5L50E] (BMW / Cadillac) (Without Bonded Pistons) 2000-Up	1	
		MASTER L/STEELS KIT		
		SEE W/STEELS NOT AVAILABLE AS MASTER LESS STEEL KIT		
		MASTER W/STEELS KIT		
	DK5500	Master W/Steels Kit, [5L40E] (BMW / Cadillac) (Without Bonded Pistons) 1999-01	1	
	DK5500A	Master W/Steels Kit, [5L40E] (BMW / Cadillac) (Without Bonded Pistons) 2002-Up	1	
	DK5500B	Master W/Steels Kit, [5L50E] 2004-Up	1	
		BONDED PISTON KITS		
	K55940	Bonded Piston Kit, [5L40E] (2WD) (11-Pistons) 1999-Mid 2002	1	
	K55941	Bonded Piston Kit, [5L40E / 5L50E] (9-Pistons) Mid 2002-Up	1	
	K55942	Bonded Piston Kit, [5L40E] (2nd Clutch & Low / Reverse) 1999-Mid 2002	1	
		FILTERS		
010	55710A	Filter, [5L40E] (BMW) (Deep Pan) (With Outlet Neck Spacer And Flat Inlet) 1999-Up	1	96022598
010	55710B	Filter, [5L40E] (BMW) (Deep Pan) (With Outlet Neck Spacer) (With 1/2" Tall Inlet Shroud) 1999-Up (With 2-Plastic Knobs on Bottom to Hold Filter Up Off the Pan)	1	96023081
010	55710	Filter, [5L40E] (GM) (Shallow Pan) (No Outlet Neck Spacer and Flat Inlet) 1999-Up	1	96022597
		BUSHINGS		
	K55901	Bushing Kit, [5L40E] 2000-Up	1	
034	54253-01	Bushing, [5L40E] (Bell Housing) 2000-Up	1	
036	55002	Bushing, [5L40E] (Stator) (Front) (.895"ID) 2000-Up	1	
046	55006	Bushing, [5L40E] (Reverse Drum) (2.275"ID) 2000-Up	1	
048	55007	Bushing, [5L40E] (Forward / Coast Clutch Drum) (Rear) (.665"ID) 2000-Up	1	
049	55018	Bushing, [5L40E] (Direct Clutch Hub Shaft) (.908"ID) (Takes 2) 2000-Up	2	
051	55013	Bushing, [5L40E] (2nd Coast Clutch Hub) (2.130"ID) 2000-Up	1	
058	55024A	Bushing, [5L40E] (Planet Shaft) (Front Bushing) 2000-Up	1	
058	55024B	Bushing, [5L40E] (Planet Shaft) (Rear Bushing) 2000-Up	1	
062	55021	Bushing, [5L40E] (Output Shaft) (Front) (1.210"ID) 2000-Up	1	
		METAL CLAD SEALS		
070	55151	Seal, [4L40E / 5L40E / 5L50E] (Front Pump) (Bolt-On) (Bell Housing) (With 2-Bolt Holes) 1999-05	1	96041855
074	55157	Seal, [4L40E / 5L40E] (Extension Housing) 1999-05	1	96051805
074	55157A	Seal, [5L50E] (Extension Housing) 2004-Up	1	96042538
072	84511	Seal, [4L40E / 5L40E / 5L50E] (Manual Lever / Control Shaft) 1999-05	1	8644709
	55164	Seal, [4L40E / 5L40E / 5L50E] (Cooler Line) 1999-05	2	24221233
		FRICTION CLUTCH (ONE-SIDED FRICTIONS) INTERNAL TEETH		
100	55102	Friction, [5L40E] (Overdrive Direct) (1-Sided) (36 Internal Teeth) (.063") 2000-Up	2	
102	55107	Friction, [5L40E] (BMW) (2nd Clutch) (1-Sided) (24 Teeth Internal) (.064") (5.428"OD) 2000-Up	5	
102	55107A	Friction, [5L40E] (Cadillac) (2nd Clutch) (1-Sided) (24 Teeth Internal) (.064") (5.115"OD) 2003-Up	2	
104	55105	Friction, [5L40E] (Intermediate Clutch) (1-Sided) (24 Teeth Internal) (.065") 2000-Up	3	

106	55101	Friction, [5L40E] (Direct Clutch) (1-Sided) (36 Teeth Internal) (.063") (6.800"OD) 2000-Up (*Also Fits Low / Reverse Clutch #114) (*Also Fits 2nd Coast Clutch #116)	4-9	
108	55104	Friction, [5L40E] (Forward Clutch) (1-Sided) (24 Teeth Internal) (.063") 2000-Up	4	
110	55102	Friction, [5L40E] (Reverse Clutch) (1-Sided) (36 Teeth Internal) (.063") 2000-Up (*Also Overdrive Clutch #100)	4-9	
112	55103	Friction, [5L40E] (Coast Clutch) (1-Sided) (24 Teeth Internal) (.064") 2000-Up	5	
114	55101	Friction, [5L40E] (Low / Reverse) (1-Sided) (36 Teeth Internal) (.063") (6.925"OD) 2000-Up	5	
116	55101	Friction, [5L40E] (2nd Coast Clutch) (1-Sided) (36 Teeth Internal) (.063") (6.925"OD) 00-Up	3	
	K55100	Friction Module, [5L40E] (BMW / Cadillac) 1999-01	1	
	K55100A	Friction Module, [5L40E] (BMW / Cadillac) 2002-Up	1	
	K55100B	Friction Module, [5L50E] 2004-Up	1	
		STEEL CLUTCH (ONE-SIDED FRICTIONS) EXTERNAL TEETH		
120	55112	Friction, [5L40E] (Overdrive) (1-Sided) (36 External Teeth) (.062") 2000-Up	2	
122	55117	Friction, [5L40E] (BMW) (2nd Clutch) (1-Sided) (24 Teeth External) (.064") (5.465"OD) 2000-Up	5	
122	55117A	Friction, [5L40E] (Cadillac) (2nd Clutch) (1-Sided) (24 Teeth External) (.064") (5.154"OD) 2003-Up	5	
123	55117B	Steel, [5L40E] (BMW) (2nd Clutch) (4 Teeth) (.087") (5.455"OD) (Waved) 2000-Up	1	
123	55117C	Steel, [5L40E] (Cadillac) (2nd Clutch) (4 Teeth) (.095") (5.135"OD) (Waved) 2003-Up	1	
124	55115	Friction, [5L40E] (Intermediate Clutch) (1-Sided) (24 Teeth External) (.065") 2000-Up	3	
125	55115A	Steel, [5L40E] (Intermediate Clutch) (4 Teeth) (.070") (Waved) 2000-Up	1	
126	55111	Friction, [5L40E] (Direct) (1-Sided) (36 External Teeth) (.063") 2000-Up	4	
127	55118	Cushion, [5L40E] (Direct Clutch) (6 Teeth) (.075") (6-5/16"OD) 2000-Up	1	
128	55114	Friction, [5L40E] (Forward Clutch) (1-Sided) (24 Teeth External) (.063") 2000-Up	4	
129	55114A	Steel, [5L40E] (Forward Clutch) (6 Teeth) (.061") (Waved) 2000-Up	1	
130	55112	Friction, [5L40E] (Reverse Clutch) (1-Sided) (36 Teeth External) (.062") 2000-Up (*Also Fits Overdrive Clutch #120)	2-4	
131	55112A	Steel, [5L40E] (Reverse Clutch) (12 Teeth) (.074") (Waved) 2000-Up	1	
131	55112B	Steel, [5L40E] (Reverse Clutch) (6 Teeth) (.078") (Waved) 2000-Up	1	
132	55113	Friction, [5L40E] (Coast Clutch) (1-Sided) (12 Teeth External) (.063") 2000-Up	5	
133	55113A	Steel, [5L40E] (Coast Clutch) (4 Teeth) (.053") (Waved) 2000-Up	1	
133	55113B	Steel, [5L40E] (Coast Clutch) (6 Teeth) (.053") (Waved) 2000-Up	1	
134	55116	Friction, [5L40E] (Low / Reverse Clutch) (1-Sided) (29 Teeth External) (.063") 2000-Up	5	
135	55116A	Steel, [5L40E] (Low / Reverse Clutch) (6 Teeth) (.077") (Waved) 2000-Up	1	
136	55111A	Friction, [5L40E] (BMW) (2nd Coast Clutch) (1-Sided) (6 Teeth External) (.063") 2000-Up	3	
136	55111	Friction, [5L40E] (Cadillac) (2nd Coast Clutch) (1-Sided) (36 Teeth External) (.063") 03-Up (*Also Fits Direct Clutch #126) (BMW & Cadilliac) 2000-Up	3	
		PRESSURE PLATES		
140	55719	Pressure Plate, [5L40E] (Overdrive) (18 Teeth) (.198" Thick) (6-7/16"ID) 2000-Up	1	
142	55715	Pressure Plate, [5L40E] (BMW) (2nd Clutch) (12 Teeth) (.198" Thick) (5.460"OD) 2000-Up	1	
142	55715A	Pressure Plate, [5L40E] (Cadillac) (2nd Clutch) (12 Teeth) (.198" Thick) (5.150"OD) 03-Up	1	
144	55716	Pressure Plate, [5L40E] (Intermediate Clutch) (12 Teeth) (.198" Thick) 2000-Up	1	
146	55717	Pressure Plate, [5L40E] (Direct Clutch) (Top) (18 Teeth) (.199"Thick) (6-1/16"ID) 2000-Up (*Also Fits [5L40E] (Cadilliac) 2nd Coast Clutch #156 2003-Up)	1	
148	55718	Pressure Plate, [5L40E] (Forward Clutch) (Top) (12 Teeth) (.200" Thick) 2000-Up	1	

5L40E/5L50E

150	55719	Pressure Plate, [5L40E] (Reverse Clutch) (Top) (18 Teeth) (.198" Thick) (6-7/16"ID) 2000-Up (*Also Fits Overdrive Clutch #140)	1-2	
151	55719A	Apply Plate, [5L40E] (Reverse Clutch) (36 Teeth) (.119" Thick) (6-7/16"OD) 2000-Up	1	
152	55720	Pressure Plate, [5L40E] (Coast Clutch) (Top) (6 Teeth) (.078" Thick) (4.125"ID) 2000-Up	1	
153	55720A	Apply Plate, [5L40E] (Coast Clutch) (6 Teeth) (Selective) 2000-Up	1	
154	55721	Pressure Plate, [5L40E] (Low / Reverse Clutch) (18 Teeth) (.198" Thick) 2000-Up	1	
156	55722	Pressure Plate, [5L40E] (BMW) (2nd Coast Clutch) (6 Teeth) (.200" Thick) 2000-Up	1	
		SEALING RINGS		
	K55903	Ring Kit , [4L40E / 5L40E / 5L50E] 2000-Up	1	
176	55301	Ring, [5L40E] (Pump Outer Slide) (Teflon) 2000-Up	1	
177	55304	Ring, [5L40E] (Forward / Coast Clutch Drum) (Front one Is Solid) (Teflon) 2000-Up	1	
177	55303	Ring, [5L40E] (Forward / Coast Clutch Drum) (Rear 3-Are Scarf Cut) (Teflon) 2000-Up	3	
179	55302	Ring, [5L40E] (Stator to Reverse Drum) (Teflon) (Takes 3) 2000-Up	3	
		WASHERS & BEARINGS		
	K55907	Washer Kit, [4L40E / 5L40E / 5L50E] 2000-Up	1	
	K55907B	Bearing Kit, [4L40E / 5L40E / 5L50E] 2000-Up	1	
209	55421	Caged Needle Bearing, [5L40E] (Stator) (Rear) (Cast #HK3512B) 2000-Up	1	
211	55401	Washer, [5L40E] (Stator to Reverse Drum) (Selective) (Plastic) (With 1-Outer Tab & 3-Inner Tabs) 2000-Up	1	
213	55402	Washer, [5L40E] (Intermediate Sprag) (Both Sides) (.040" Thick) (Plastic With 3-Inner Tabs) (3.22"OD) 2000-Up	1	
217	55422	Bearing W/Races, [5L40E] (Intermediate Sprag to Low Sprag) 2000-Up	1	
226	55423	Caged Needle Bearing, [5L40E] (Center Support) (Cast #HK 5020 B) 2000-Up	1	
230	55403	Washer, [5L40E] (Direct Hub to Reverse / Overdrive Hub) (.064" Thick) (Plastic) (With 3-Tabs) 2000-Up	1	96042701
232	55424	Bearing W/Races, [5L40E] (Forward / Coast Drum to Hub) 2000-Up	1	
234	55404	Washer, [5L40E] (Forward Sprag Inner Race to Sprag) (3-Inner Tabs) (.049"Thick) (3.225"OD) 2000-Up	1	
236	55405	Washer, [5L40E] (Forward Sprag to Direct Clutch Hub) (.062" Thick) (Plastic) (With 3-Tabs) 2002-Up	1	
250	55425	Bearing W/Races, [5L40E] (Center Support to 2nd Clutch Sprag) (Thick Spacer Race on One Side) 2000-Up	1	
251	55406	Washer, [5L40E] (2nd Coast Clutch Hub to Planet) (Plastic) (With 3-Tabs) (3.638"OD) 00-Up	1	
252	55426	Bearing W/Races, [5L40E] (Planet to Output Shaft) (Stepped) 2000-Up	1	96042818
257	55427	Bearing W/Races, [5L40E] (Low / Reverse Clutch Hub to Center Support) 2000-Up	1	
268	55431	Caged Needle Bearing, [5L40E] (Inside Planet Pilot) (.780"OD) 2000-Up (Cast # NADELLA HK 1412)	1	
269	55428	Bearing W/1 Race, [5L40E] (Output Shaft to Extention Housing) (2.598"OD) 2000-Up	1	96042818
270	55437	Shim, [5L40E] (Output Shaft to Extension Housing) (Selective) (2.440"OD) 2000-Up	1	96042543
271	55429	Caged Needle Bearing, [5L40E] (Extension Housing) (Front) (Cast #HK 4520B) 2000-Up	1	
272	55429A	Caged Needle Bearing, [5L40E] (Extension Housing) (Rear) (Cast #HK 4012B) 2000-Up	1	
282	55430	Bearing W/Races, [5L40E] (#250 Bearing to 2nd Clutch Sprag) 2000-Up	1	
283	55407	Washer, [5L40E] (2nd Clutch Sprag) (Both Sides) (Plastic) (With 3-Inner Tabs) (3.638"OD) 2000-Up	2	
285	55408	Washer, [5L40E] (Low Sprag) (Both Sides) (Plastic) (With 3-Inner Tabs) (3.577"OD) 00-Up	2	
287	55409	Washer, [5L40E] (Yoke to Output Shaft Nut) 2000-Up	1	
		GASKETS & RUBBER COMPONENTS		
300	55500	Gasket, [5L40E] (Bottom Pan) (20-Bolt Holes) (Bonded) 2000-Up	1	96042862

305	55505	Gasket, [5L40E] (Extention Housing) (7-Holes) (Bonded) 2000-Up	1	96042887
310	55503	Gasket, [5L40E] (Stator to Case) (Bonded) 2000-Up	1	
311	55522	O-Ring, [5L40E] (Bell Housing to Case) 2000-Up	1	
313	65174	O-Ring, [5L40E] (Pump Outer Slide) 2000-Up	1	
	55512	Gasket, [5L40E] (Valve Body Seperator Plate to Lower Channel Plate), (Valve Body Seperator Plate to Front & Rear Lower Valve Body), (Upper Channel Plate to Lower Channel Plate) (*3-Gaskets sold in 1-Kit) 2000-Up	1	
338	55530	O-Ring, [5L40E] (Reverse Clutch Drum Piston) (Direct Housing) (Inner) 2000-Up	1	
342	55532	Lube Seals, [5L40E] (Valve Body to Overdrive/Intermediate Housing) (2-Tubes With Molded Rubber Seals) 2000-Up	2	
342	55532A	Lube Seals, [5L40E] (Valve Body to Center Support) (4-Tubes With Molded Rubber Seals) 2000-Up	4	96041778
380	55533	O-Ring, [5L40E] (Input Shaft) (Front) 2000-Up	1	
		TECHNICAL MANUALS		
	TM5L40E	Technical Manual, [4L40E / 5L40E]	1	ATSG
		ELECTRICAL COMPONENTS		
410	55947	Switch, [5L40E] (Cadillac) (PRNDL) (96020017) 2003-Up	1	96042540
421	55946	Solenoid, [5L40E] (Shift) (1-2 Shift) (All) 2000-Up	1	96022804
422	55946	Solenoid, [5L40E] (Shift) (2-3 Shift) (All) 2000-Up	1	
425	77942	Solenoid, [5L40E] (Torque Converter Clutch) 2000-Up	1	
428	33946	Solenoid, [5L40E] (EPC) (Pressure Control Solenoid) 1999-03	1	
428	33946A	Solenoid, [5L40E] (EPC) (Pressure Control Solenoid) 2004-Up	1	
436	55958	Input Sensor, [5L40E] (BMW) 2000-Up	1	
436	55958A	Input Sensor, [5L40E] (Cadillac) 2003-Up	1	
	55952	Sensor, [5L40E] (Cadillac) (TFT) (Temperature) (2-Pin) 2003-Up	1	
438	55958	Sensor, [5L40E] (BMW) (Output Speed) (96022527) 2000-Up (*Also Fits #436 Input Speed Sensor) 2000-Up	1-2	
438	55958A	Sensor, [5L40E] (Cadillac) (Output Speed) (96020037) 2003-Up (*Also Fits #436 Input Speed Sensor) 2003-Up	1-2	96041860
440	55946	Solenoid, [5L40E] (Shift) (4-5 Shift) (All) 2000-Up	1	
446	55986	Wire Harness, [5L40E] (BMW) (Internal) (20-Pin Case Connector) (With (7) 2-Wire & (1) 6-Wire Connectors) 2000-Up	1	
446	55986A	Wire Harness, [5L40E] (Cadillac) (Internal) (20 Pin Case Connector) (With (8) 2-Wire & (1) 6-Wire Connectors) 2003-Up	1	96042847
		HARD PARTS		
520	55919	Pump, [5L40E] (Stator) (BMW) (Aluminum) (Cast # 095304) (11-Bolt) 2000-Up	1	
520	55919A	Pump, [5L40E] (Stator) (Cadillac) (Aluminum) (Ink # 1268-190100) 2003-Up	1	
		PUMP COMPONENTS		
	55909-01K	Reverse Boost Valve Assembly, [5L40E] (Contains: Valve, Sleeve & Spacer) 2000-Up	1	Sonnax
531	K65927B	Rotor Kit, [5L40E] (13-Vane) (.707" Rotor) 1997-3/2004	1	
532	65927B	Rotor, [5L40E] (13-Vane) (.7070" to .7075")	1	
533	75926	Vane, [5L40E] (Takes 13)	13	8631280
534	65928A	Pump Slide, [5L40E] (.7074")	1	2421481
535	65797	Pivot Pin, [5L40E] (Pump Slide) (Spring Snap to Pin) 2000-Up	1	
536	55722	Spring, [5L40E] (Pump Outer Slide) (.645"OD) 2000-Up	1	
538	65925S	Ring, [5L40E] (Pump Vane Solid Steel) "Hardened"	2	24201144
539	65929B	Rotor Guide, [5L40E] (Pump) (13-Vane)	1	24205410
540	65798	Spring, [5L40E] (Pump Slide Pivot Pin)	1	

5L40E/5L50E

		HARD PARTS (Continued)		
546	55775A	Apply Ring, [5L40E] (Overdrive Clutch) (Aluminum) (.636" Thick) 2000-Up	1	
547	55775B	Apply Ring, [5L40E] (BMW) (2nd Coast Clutch) (Aluminum) (.430" Thick) 1999-Up	1	
547	55775C	Apply Ring, [5L40E] (Cadillac) (2nd Coast Clutch) (Aluminum) (.555" Thick) 2003-Up	1	
550	55835	Housing, [5L40E] (BMW) (Overdrive & Intermediate Clutch) (3-Clutch Overdrive) 2000-Up	1	
550	55835A	Housing, [5L40E] (Cadillac) (Overdrive & Intermediate Clutch) (2-Clutch Overdrive) 2003-Up	1	96042808
554	55831	Drum W/Shaft, [5L40E] (BMW) (Forward / Coast Clutch) (9-1/8" Long Shaft) 2000-Up	1	
554	55831A	Drum W/Shaft, [5L40E] (Cadillac) (Forward / Coast Clutch) (8-15/16" Long Shaft) 2003-Up	1	96042815
556	55830	Drum, [5L40E] (Reverse Clutch) (Stamped Steel) (With 31 Teeth Reluctor) 2000-Up	1	96042814
559	55836	Housing, [5L40E] (BMW) (Coast Clutch) (Aluminum) (1.380" Thick) 2000-Up	1	
559	55836A	Housing, [5L40E] (Cadillac) (Coast Clutch) (Aluminum) (1.265" Thick) 2003-Up	1	
560	K55923	Piston Kit, [5L40E] (Overdrive Clutch) (Bonded) 2000-Up	1	
562	K55926	Piston Kit, [5L40E] (Intermediate Clutch) (Bonded) 2000-Up	1	
563	K55923	Piston Kit, [5L40E] (BMW) (2nd Coast Clutch) (Bonded) (.070" Thick) 1999-01	1	
563	K55923A	Piston Kit, [5L40E] (Cadilliac) (2nd Coast Clutch) (Bonded) (.305" Thick) 2002-Up	1	
565	K55922	Piston Kit, [5L40E] (Direct Clutch) (Bonded With Check Ball) 2000-Up	1	
567	K55927A	Piston Kit, [5L40E] (Low / Reverse Clutch) (Bonded) 2000-Up	1	
568	K55928A	Piston Kit, [5L40E] (2nd Clutch) (Bonded) 2000-02	1	
568	K55928B	Piston Kit, [5L40E] (2nd Clutch) (Bonded) 2003-Up	1	
569	K55921	Piston Kit, [5L40E] (Coast Clutch) (Bonded) 2000-Up	1	
570	55839	Hub W/Shaft, [5L40E] (Reverse / Overdrive Clutch) (36 Teeth Hub) 2000-Up	1	
575	55832	Hub W/Shaft, [5L40E] (BMW) (Direct Clutch) (Rear Bushing Down 1-1/16" From Shaft End) 2000-Up	1	
575	55832A	Hub W/Shaft, [5L40E] (Cadillac) (Direct Clutch) (Rear Bushing Down 3/4" From Shaft End) 2003-Up	1	96042700
577	55833	Hub, [5L40E] (Low / Reverse Clutch) (With Low Sprag Inner Race) 2000-Up	1	
579	55838	Hub, [5L40E] (BMW) (2nd Coast Clutch) (2.515" Tall) 2000-Up	1	
579	55838A	Hub, [5L40E] (Cadillac) (2nd Coast Clutch) (2.575" Tall) 2003-Up	1	
584	55747	Planet, [5L40E] (BMW) (1-Groove on Small Gears) (Housing Is Cast Iron & Stamped Steel) 2000-Up	1	
584	55747A	Planet, [5L40E] (Cadillac) (Has No Groove on Small Gear) (Housing Is Stamped Steel) 2003-Up	1	96042817
594	55748	Ring Gear, [5L40E] (BMW) (Planet) (106 Teeth) (Left Angle) (24-Outer Park Lugs) (1-Groove on Lugs) 2000-Up	1	
594	55748A	Ring Gear, [5L40E] (BMW) (Planet) (107 Teeth) (Right Angle) (36-Outer Lugs) (No Groove on Overdrive) 2000-Up	1	
594	55748B	Ring Gear, [5L40E] (Cadillac) (Planet) (110 Teeth) (Right Angle) (36-Outer Lugs) (1-Groove on Overdrive) 2003-Up	1	
594	55748C	Ring Gear, [5L40E] (Cadillac) (Planet) (114 Teeth) (Left Angle) (24-Outer Park Lugs) (No Groove on Parking Lugs) 2003-Up	1	
632	55845	Center Support, [5L40E] (BMW) (6 Teeth) (2nd Coast Steels) 2000-Up	1	
632	55845A	Center Support, [5L40E] (Cadillac) (36 Teeth) (2nd Coast Steels) 2003-Up	1	96042816
		SPRAGS & ONE WAY CLUTCHES		
652	55725	Sprag, (Intermediate) 2000-Up	1	
654	55727	Sprag W/End Washers, [5L40E] (BMW) (Low) (26-Lugs) (Cage 1/2 Plastic-1/2 Metal) 00-Up	1	
654	55727A	Sprag W/End Washers, [5L40E] (Cadillac) (Low) (26-Lugs) (Cage is all Metal) 2003-Up	1	
656	55726	Sprag W/End Washers, [5L40E] (BMW) (2nd Clutch) (28-Lugs) (Cage is 1/2 Plastic & 1/2 Metal) 2000-Up (*Can Use 55726A)	1	

656	55726A	Sprag W/End Washers, [5L40E] (Cadillac) (2nd Clutch) (32-Lugs) (Cage is all Metal) 03-Up (*Can Use 55726)	1	
658	55725	Sprag W/End Washers, [5L40E] (BMW) (Forward) (26-Lugs) 2000-Up (Cage is 1/2 Plastic & 1/2 Metal) (*Also Fits Intermediate Sprag) (*Can Use 55725A)	1-2	
658	55725A	Sprag W/End Washers, [5L40E] (Cadillac) (Forward) (26-Lugs) 2003-Up (Cage is all Metal) (*Also Fits Intermediate Sprag) (*Can Use 55725)	1-2	
663	55821	Outer Race, [5L40E] (Intermediate Sprag) (With 24 Teeth Hub) 2000-Up	1	
665	55822	Outer Race, [5L40E] (Low Sprag) (28-Lugs) 2000-Up	1	
667	55823	Outer Race W/Hub, [5L40E] (2nd Clutch Sprag) (With 24 Teeth 2nd Clutch Hub) 2000-Up	1	
668	55840	Inner Sprag Race W/Hub, [5L40E] (Forward Sprag) (24 Teeth Hub) 2000-Up	1	
669	55825	Outer Race/Hub, [5L40E] (Forward Sprag) (24 Teeth Hub) 2000-Up	1	
		HARD PARTS (Continued)		
674	55733	Shaft, [5L40E] (BMW) (Input Sun Gear) (11-1/2" Long) (Rear Bushing Surface for Bushing #049 is 1-11/16" Long) 2000-Up	1	
674	55733A	Shaft, [5L40E] (Cadillac) (Input Sun Gear) (11-1/2" Long) (Rear Bushing Surface for Bushing #049 is 1-9/16" Long) 2003-Up	1	
678	55737A	Output Shaft, [5L40E] (BMW) (6-13/16" Long) (106 Teeth Ring Gear) (Bolt-on Yoke) 00-Up	1	
678	55737	Output Shaft, [5L40E] (Cadillac) (6-13/16" Long) (114 Teeth Ring Gear) (Bolt-on Yoke) 2003-Up	1	96042813
694	55734	Retainer, [5L40E] (Holds Low Sprag to Low / Reverse Clutch Hub) (Stepped) (Crimped-on) 2000-Up	1	
694	55735	Retainer, [5L40E] (2nd Clutch Sprag) (Tin) (.040" Thick) 2000-Up	1	
695	55436	Spacer, [5L40E] (Intermediate Sprag to Low Sprag) (.160" Thick) (1.686"ID) (1.750"OD) 2000-Up	1	
		VALVE BODY COMPONENTS		
	55211-04K	Valve & Sleeve Kit, [5L40E] (TCC Regulator) (Contains: Valve, Sleeve, Spring, Solenoid Protector, and 2-Retain Clips) **(*Requires Reamer F-55211-TL4 & VB-FIX)**	1	Sonnax
	F-55211-TL4	Reamer, Jig & Guide Pin (*For 55211-04K)	1	Sonnax
	5L4-ACT-VL	Actuator Feed Limit Valve Repair, [5L40E] (And Pressure Regulator Valve Repair) (Repairs 3-Transmissions) (Contains: Pressure Valve, Spring, & Seat, Limit Valve, 3-Springs and Reamer) (*Also With Forward & Coast Clutch Piston Seal Protectors)	1	Transgo
	5L4-ACT-VL5	Refills, [*For 5L4-ACT VL] (Repairs 5-Transmissions) (*Less Tools)	1	Transgo
	55211-01K	Valve & Sleeve Kit, [5L40E] (AFL) (Actuator Feed Limit) (Contains Valve, Sleeve, Spring & Retaining Clip) **(*Requires Reamer F-55211-TL & VB-FIX)**	1	Sonnax
	F-55211-TL	Reamers, Jig & Guide Pin (*For 55211-01K)	1	Sonnax
	55211-08K	Valve & Sleeve Kit, [5L40E] (Pressure Regulator) (Contains: Valve, Sleeve, & Spring Pin) **(*Use Tool # 55211-TL8)**	1	Sonnax
	55211-TL8	Reamer, (*For 55211-08K)	1	Sonnax
		VALVE BODIES (REBUILT)		
740	GM-4670	Valve Body, [5L40E] (Cadillac, BMW) 2000-Up	1	
		VALVE BODIES		
740	55754A	Valve Body, [5L40E] (Cadillac) (5-Switch With 4-Accumulators) 2003-Up	1	
		HARD PARTS (Continued)		
750	55703	Bell Housing, [5L40E] (BMW) (5" Top Bolts) (Starter at 11:00) (Cast # 96023586) 2000-Up	1	
750	55703A	Bell Housing, [5L40E] (Cadillac) (5-1/2" Top Bolts) (Starter at 1:00) (Square at 6:00) (Cast # 96022419) 2003-Up	1	96042812
760	55251A	Case, [5L40E] (BMW) (*Uses a 10-3/8" Linkage Shaft) (# 991-4) 2000-Up	1	
760	55251	Case, [5L40E] (Cadillac) (*Uses a 3-3/4" Linkage Shaft) (# 991-4) 2003-Up	1	
765	57801	Pan, [5L40E] (BMW) (Bottom) (20-Bolt) (1-5/8" at Deep End) 2000-Up	1	

5L40E/5L50E

765	57801A	Pan, [5L40E] (Cadillac) (Bottom) (20-Bolt) (2" at Deep End) 2003-Up	1	96042546
770	55915	Extension Housing, [5L40E] (BMW) (2-Threaded Mounting Holes Below Rear Seal) 00-Up	1	
770	55915A	Extension Housing, [5L40E] (Cadillac) (With 2-Slotted Mounting Holes Below Rear Seal & 2-Threaded Holes Below Gasket Surface)	1	
776	K55879	Bolt Set, [5L40E] (Bell Housing to Case) (7-Pieces) (*Also Fits Extension Housing to Case) 2000-Up	1	
798	55841	Nut, [5L40E] (Output Shaft Yoke) 2000-Up	1	96041805
841	55824	Yoke, [5L40E] (Output Shaft) (3-Bolt) (1.770"OD Seal Surface) 2000-Up	1	
	K55928	Snap Ring Kit, [5L40E] 2000-Up	1	
860	55600	Snap Ring, [5L40E] (Holds Overdrive / Intermediate Housing in Case) (Beveled) (.146" Thick) (8-3/8" OD With Eyelets) 2000-Up	1	
861	55601	Snap Ring, [5L40E] (Holds Overdrive Pressure Plate in - Selective) 2000-Up (*Also [5L40E] Holds Reverse Clutch Pressure Plate In #892) 2000-Up	1	
862	55602	Snap Ring, [5L40E] (Holds Overdrive Clutch Return Spring in) 2000-Up	1	
863	55603	Snap Ring, [5L40E] (Holds 2nd Coast Clutch Pressure Plate In) (Selective) (7-5/16"OD) 2000-Up	1	
864	55604	Snap Ring, [5L40E] (Holds 2nd Clutch Pressure Plate In) 2000-Up (*Also Holds Intermediate Clutch Pressure Plate In) (Selective #873) 2000-Up	1	
864	55604A	Snap Ring, [5L40E] (Holds 2nd Clutch Pressure Plate In) (Cadillac) (*Also Holds Forward Clutch Pressure Plate In #876)	1	
865	55605	Snap Ring, [5L40E] (Holds 2nd Clutch Spring Retainer In) 2000-Up	1	
871	55606	Snap Ring, [5L40E] (Holds Coast Clutch Piston Retainer In) 2000-Up	1	
874	55607	Snap Ring, [5L40E] (Holds Intermediate Piston Housing to the Overdrive & Intermediate Clutch Housing) 2000-Up	1	
878	55608	Snap Ring, [5L40E] (Holds Direct Clutch Pressure Plate In) (Selective) 2000-Up (*Also [5L40E] Holds Low / Reverse Clutch Pressure Plate In #885) 2000-Up	1-2	
879	55609	Snap Ring, [5L40E] (Holds Direct Clutch Retainer In) 2000-Up	1	
881	55610	Snap Ring, [5L40E] (Holds Forward Sprag Inner Race to Shaft) 2000-Up	1	
884	55611	Snap Ring, [5L40E] (Holds Bearing #250 to Planet) 2000-Up	1	
893	55612	Snap Ring, [5L40E] (Holds Low / Reverse Clutch Return Spring In) 2000-Up	1	
894	55613	Snap Ring, [5L40E] (Holds Ring Gear to Output Shaft) 2000-Up	1	
895	55614	Snap Ring, [5L40E] (Yoke Spacer) (.067" Thick) (1.664" OD) 2000-Up	1	
	K55940	Bonded Piston Kit, [4L40E / 5L40E / 5L50E] (2WD) (11-Pistons) 1999-Mid 2002	1	
	K55941	Bonded Piston Kit, [4L40E / 5L40E / 5L50E] (9-Pistons) Mid 2002-Up	1	
	K55942	Bonded Piston Kit, [4L40E / 5L40E /5L50E] (2nd Clutch & Low / Reverse) 1999-Mid 2002	1	
960	55923	Piston, [5L40E] (Overdrive Clutch) (Bonded) (.273" Thick) 2000-Up	1	
962	55926	Piston, [5L40E] (Intermediate Clutch) (Bonded) (.725" Thick) 2000-Up	1	
962	55732	Piston Housing, [5L40E] (Intermediate Clutch) (Steel) (24-Outer Lugs) 2000-Up	1	
963	55924	Piston, [5L40E] (2nd Coast Clutch) (Bonded) (2.70" Thick) 1999-01	1	
963	55923	Piston, [5L40E] (2nd Coast Clutch) (Bonded) (.305" Thick) 2002-Up	1	
964	55920	Piston, [5L40E] (Forward Clutch) (Bonded) (5.145"OD) 2000-Up	1	
965	55922	Piston, [5L40E] (Direct Clutch) (Bonded With Check Ball) 2000-Up	1	
966	55925	Piston, [5L40E] (Reverse Clutch) 1999-Up	1	
966	55731	Direct Clutch Housing, [5L40E] (BMW) (4-Clutch) (Stamped Steel) 2000-Up	1-2	
966	55730	Direct Clutch Housing, [5L40E] (Cadillac) (4-Clutch) (Stamp Steel) (2.395"Tall) 2003-Up	1-2	
967	55927	Piston, [5L40E] (Low / Reverse Clutch) (Bonded) 1999	1	
967	55927A	Piston, [5L40E] (Low / Reverse Clutch) (Bonded) 2000-Up	1	
968	55928	Piston, [5L40E] (2nd Clutch) (Bonded) 1999	1	

968	55928A	Piston, [5L40E] (2nd Clutch) (Bonded) 2000-02	1	
968	55928B	Piston, [5L40E] (2nd Clutch) (Bonded) 2003-Up	1	
969	55921	Piston, [5L40E] (Coast Clutch) (Bonded With Check Ball) (4.775”OD) 2000-Up	1	
970	55940	Spring, [5L40E] (Overdrive Clutch Return) (.032” Thick) 2000-Up	1	
972	55970	Spring, [5L40E] (Intermediate Clutch Return) (32-Springs) 2000-Up	1	
973	55941	Spring, [5L40E] (BMW) (2nd Coast Clutch Return) (7”OD) 2000-Up	1	
973	55941A	Spring, [5L40E] (Cadillac) (2nd Coast Clutch Return) (6-13/16”OD) 2003-Up	1	
975	55942	Spring, [5L40E] (Direct Clutch Return) (16-Fingers) (.069”) 2000-Up	1	
977	55943	Spring, [5L40E] (Low / Reverse Clutch Return) (.075” Thick) 2000-Up	1	
978	55971	Spring, [5L40E] (BMW) (2nd Clutch Return) (.792” Thick) (3.970”OD) (With Built-In Retainer) 2000-Up	1	
978	55971A	Spring, [5L40E] (Cadillac) (2nd Clutch Return) (.730” Thick) (3.800”OD) (Tin Retainer #988) 2003-Up	1	
979	55972	Springs W/Retainer, [5L40E] (Coast Clutch Return) 2000-Up	1	
985	55930	Retainer, [5L40E] (Direct Clutch Return Spring) (4-OD Tabs) 2000-Up	1	
988	55931	Retainer, [5L40E] (Cadillac) (2nd Clutch Spring) (Tin) 2003-Up	1	
991	55675A	Manual Shaft, [5L40E] (BMW) (10-3/4” Long) 2000-Up	1	
991	55687	Spring, [5L40E] (Cadillac) (Detent) (Rooster Comb) (6-1/4”) 2003-Up	1	96042712
991	55684	Rooster Comb, [5L40E] (Cadillac) 2003-Up	1	96042819
991	55675	Manual Shaft, [5L40E] (Cadillac) (3-3/4” Long) 2003-Up	1	96042544
992	55675B	Shift Lever, [5L40E] (Cadillac) (External) (3” Long) 2003-Up	1	
994	55677	Park Rod Actuator, [5L40E] (Cadillac) (9-3/4” Long) 2003-Up	1	
995	K55678	Park Pawl Assembly, [5L40E] (5-Pieces) 2000-Up	1	96042820

6L45/6L50/6L80/6L90

RWD 6 Speed

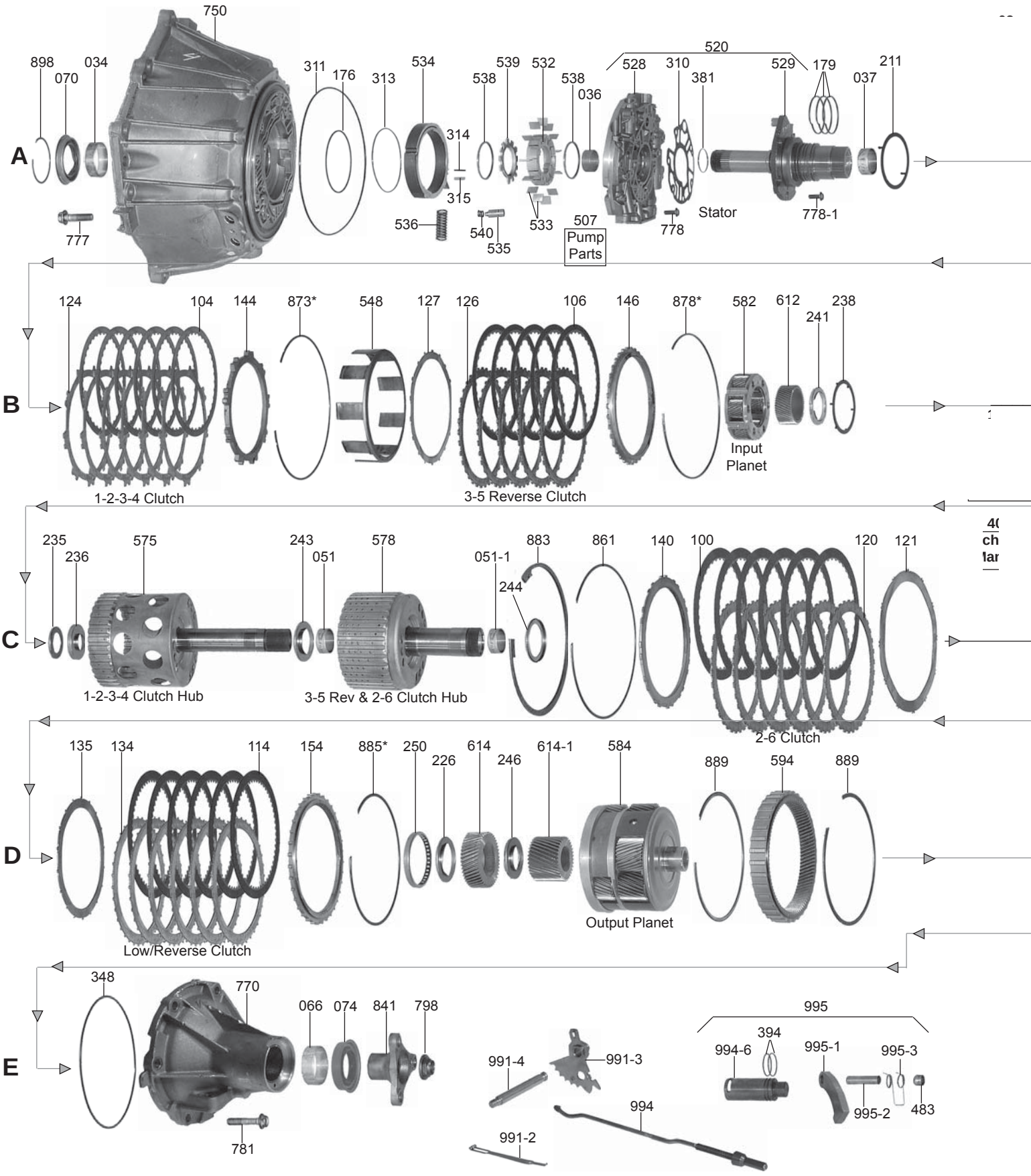

RWD 6 Speed

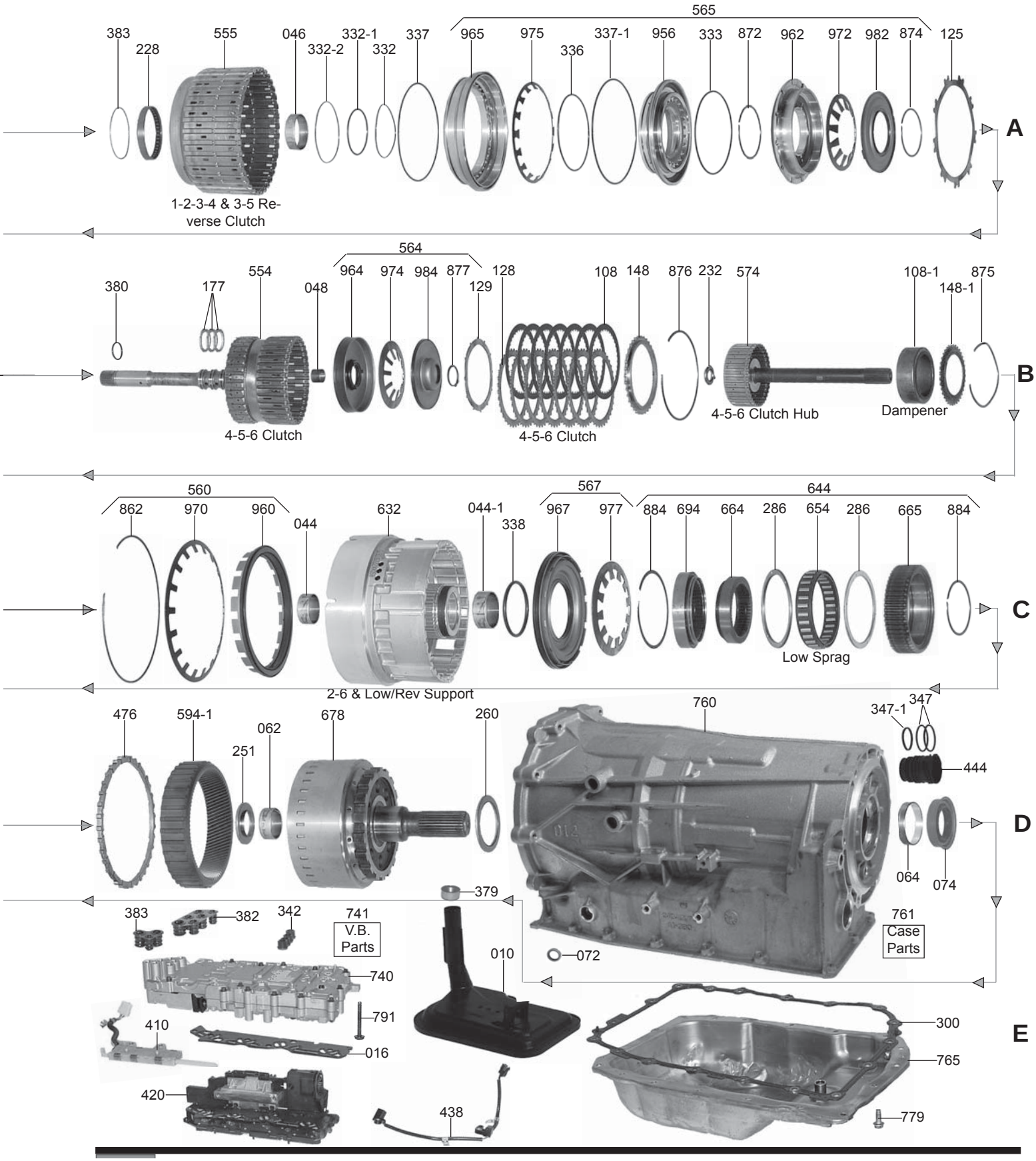
565
383
228
555
046
332-2
332-1
332
337
965
975
336
337-1
956
333
872
962
972
982
874
125
A
1-2-3-4 & 3-5 Reverse Clutch
564
380
177
554
048
964
974
984
877
129
128
108
148
876
232
574
108-1
148-1
875
B
4-5-6 Clutch
4-5-6 Clutch
4-5-6 Clutch Hub
Dampener
560
862
970
960
044
632
044-1
338
567
967
977
644
884
694
664
286
654
286
665
884
C
Low Sprag
2-6 & Low/Rev Support
476
594-1
251
062
678
260
760
347-1
347
444
D
064
074
379
383
382
342
741
V.B. Parts
761
Case Parts
010
072
740
791
410
016
420
438
300
765
779
E

6L45/6L50/6L80/6L90

ILL#	PART#	DESCRIPTION	QTY	REF #
		OVERHAUL KITS		
	K135900P	Overhaul Kit, [6L45 / 6L50] (With Pistons) 2007-Up	1	
	K135900	Overhaul Kit, [6L45 / 6L50] (Without Pistons) 2007-Up	1	
	K135900AP	Overhaul Kit, [6L80] (With Pistons) 2006-Up	1	
	K135900A	Overhaul Kit, [6L80] (Without Pistons) 2006-Up	1	
	K135900CP	Overhaul Kit, [6L90] (With Pistons) 2007-Up	1	
	K135900C	Overhaul Kit, [6L90] (Without Pistons) 2007-Up	1	
		MASTER L/STEELS KIT		
	DK13500P-S	Master L/Steels Kit, [6L45 / 6L50] (With Pistons) 2007-Up	1	
	DK13500-S	Master L/Steels Kit, [6L45 / 6L50] (Without Pistons) 2007-Up	1	
	DK13500AP-S	Master L/Steels Kit, [6L80] (With Pistons) 2006-Up (*Car Application)	1	
	DK13500A-S	Master L/Steels Kit, [6L80] (Without Pistons) 2006-Up (*Car Application)	1	
	DK13500BP-S	Master L/Steels Kit, [6L80] (With Pistons) 2006-Up (*Truck Application)	1	
	DK13500B-S	Master L/Steels Kit, [6L80] (Without Pistons) 2006-Up (*Truck Application)	1	
	DK13500CP-S	Master L/Steels Kit, [6L90] (With Pistons) 2007-Up	1	
	DK13500C-S	Master L/Steels Kit, [6L90] (Without Pistons] 2007-Up	1	
		MASTER W/STEELS KIT		
	DK13500P	Master W/Steels Kit, [6L45 / 6L50] (With Pistons) 2007-Up	1	
	DK13500	Master W/Steels Kit, [6L45 / 6L50] (Without Pistons) 2007-Up	1	
	DK13500AP	Master W/Steels Kit, [6L80] (With Pistons) 2006-Up (*Car Application)	1	
	DK13500A	Master W/Steels Kit, [6L80] (Without Pistons) 2006-Up (*Car Application)	1	
	DK13500BP	Master W/Steels Kit, [6L80] (With Pistons) 2006-Up (*Truck Application)	1	
	DK13500B	Master W/Steels Kit, [6L80] (Without Pistons) 2006-Up (*Truck Application)	1	
	DK13500CP	Master W/Steels Kit, [6L90] (With Pistons) 2007-Up	1	
	DK13500C	Master W/Steels Kit, [6L90] (Without Pistons) 2007-Up	1	
		FILTERS		
010	135710	Filter, [6L45] 2007-Up	1	
010	135711	Filter, [6L50] 2007-Up	1	
010	135710A	Filter, [6L80 / 6L90] 2006-Up	1	
010	135710C	Filter, [6L90] 2007-Up	1	
		BUSHINGS		
	K135901	Bushing Kit, [6L45 / 6L50] 2007-Up	1	
	K135901A	Bushing Kit, [6L80 / 6L90] 2006-Up	1	
034	135001	Bushing, [6L50 / 6L80 / 6L90] (Bell Housing) (Pump Body) (Teflon Coated) (.785") (1.995"OD) (1.850"ID)	1	
036	135002	Bushing, [6L50] (Stator) (Front) (.495"Wide) (1.033"OD) (.905"ID) (Babbit) 2007-Up	1	
036	135002A	Bushing, [6L80 / 6L90] (Stator) (Front) (.540"Wide) (1.245"OD) (1.115"ID) (Babbit) 2006-Up	1	
037	135003	Bushing, [6L50] (Stator) (Rear) (1.200"ID) 2007-Up	1	
037	135003A	Bushing, [6L80 / 6L90] (Stator) (Rear) (1.480"ID) 2006-Up	1	
044	135006A	Bushing, [6L50 / 6L80 / 6L90] (2-6 & Low / Reverse Support) (Front) (.415") (1.025"OD) (1.890"ID) (Babbit)	1	

044	135007	Bushing, [6L50] (2-6 & Low / Reverse Support) (Rear) (.450") (1.890"OD) (1.750"ID) (Babbit) 2007-Up	1	
044	135007A	Bushing, [6L80 / 6L90] (2-6 & Low / Reverse Support) (Rear) (.520") (2.030"OD) (1.895"ID) (Babbit) 2006-Up	1	
046	135008A	Bushing, [6L50 / 6L80 / 6L90] (1-2-3-4 & 3-5 Reverse Drum) (Rear) (.505"Wide) (2.190"ID) (Babbit)	1	
048	135009A	Bushing, [6L50 / 6L80 / 6L90] (4-5-6 Clutch Drum) (Rear) (.690"ID) (Babbit) 2006-Up	1	
051	135011	Bushing, [6L50 / 5L90] (3-5 Reverse & 2-6 Clutch Hub) (Front) (1.475"ID) (With Oil Pockets) (Babbit) 2007-Up	1	
051	135010	Bushing, [6L50] (3-5 Reverse & 2-6 Clutch Hub) (Rear) (1.358"ID) (2-Grooves) (Babbit) 2007-Up	1	
051	135011A	Bushing, [6L80] (3-5 Reverse & 2-6 Clutch Hub) (Front) (1.475"ID) (Smooth) (Babbit) 2006-Up	1	
051	135010B	Bushing, [6L80 / 6L90] (3-5 Reverse & 2-6 Clutch Hub) (Rear) (1.465"ID) (2-Grooves) (Babbit) 2006-Up	1	
062	135021	Bushing, [6L50] (Output Shaft) (1.200"ID) (Babbit) 2007-Up	1	
062	135021A	Bushing, [6L80 / 6L90] (Output Shaft) (1.430"ID) (Babbit) 2006-Up	1	
064	135012A	Bushing, [6L80 / 6L90] (Case) (Rear) (2.200"OD) (2.075"ID) (Teflon Coated) (Split) 2006-Up	1	
066	135020C	Bushing, [6L90] (Extension Housing) (2WD) (2.030"OD) (1.888"ID) 2007-Up	1	
		METAL CLAD SEALS		
070	135151	Seal, [6L50 / 6L80 / 6L90] (Front) (.380" Thick) (2.995"OD) 2006-Up	1	
072	38511	Seal, [6L50 / 6L80 / 6L90] (Manual Lever) 2006-Up	1	
074	135157	Seal, [6L50] (2WD) (Extension Housing) (2.430"OD) (1.730"ID) 2007-Up	1	
074	135157A	Seal, [6L80] (2WD) (Extension Housing) (2.690"OD) 2006-Up	1	
074	135157C	Seal, [6L90] (2WD) (Extension Housing) (3.005"OD) (2.000"ID)	1	
074	135160	Seal, [6L80 / 6L90] (4WD) (Adapter Housing)	1	
		FRICTIONS & 1-SIDED INTERNAL TOOTH FRICTION		
100	135104	Friction, [6L50] (2-6 Clutch) (.098") (36 Teeth Internal) (7-1/4"OD) (1-Sided Friction) 2007-Up	5	
100	135104A	Friction, [6L80 / 6L90] (2-6 Clutch) (.071") (36 Teeth) (7-3/4"OD) (Grooved) 2007-Up	6	
104	135101	Friction, [6L50] (1-2-3-4 Clutch) (.065") (36 Teeth) (6-3/4"OD) 2007-Up	5	
104	135101A	Friction, [6L80 / 6L90] (1-2-3-4 Clutch) (.065") (36 Teeth) (7-1/4"OD) {6L80-5ea / 6L90-6ea} 06-Up	5-6	
106	135102	Friction, [6L50] (3-5 Reverse Clutch) (.073") (36 Teeth) (7-1/8"OD) 2007-Up	4	
106	135102A	Friction, [6L80 / 6L90] (3-5 Reverse Clutch) (.073") (36 Teeth) (7-11/16"OD) {6L80-4ea / 6L90- 5ea} 2006-Up	4-5	
108	135103	Friction, [6L50] (4-5-6 Clutch) (.079") (36 Internal Teeth) (1-Sided) (4.945"OD) 2007-Up	5	
108	135103D	Dampener Friction, [6L50] (4-5-6 Clutch) (1.020"Thick) (3.696"OD) (2.835"ID) (Cast # 24230475) 2007-Up	1	
108	135103A	Friction, [6L80 / 6L90] (4-5-6 Clutch) (.063") (36 Teeth) (5.095"OD) {6L80-6ea / 6L90-7ea} 06-Up	6-7	
108	135103C	Dampener Friction, [6L80 / 6L90] (4-5-6 Clutch) (.885"Thick) (3.815"OD) (2.835"ID) (Cast # 24230368) 2006-Up	1	
114	135109	Friction, [6L50] (Low / Reverse Clutch) (.064") (54 Teeth) (7"OD) (.360"Wide Friction Lining) 2007-Up	6	
114	135109A	Friction, [6L80 / 6L90] (Low / Reverse Clutch (.062") (54 Teeth) (7"OD) (.460"Wide Friction Lining) 2007-Up (*Car Application)	6	
114	135109B	Friction, [6L80 / 6L90] (Low / Reverse Clutch) (.064") (54 Teeth) (7"OD) (.460"Wide Lining) {6L80- 5ea / 6L90-6ea} (*Truck Application)	5-6	
	K135100A	Friction Module, [6L80] 2006-Up (*Car Application)	1	
	K135100B	Friction Module, [6L80] 2006-Up (*Truck Application)	1	
		STEELS & 1-SIDED EXTERNAL TOOTH FRICTION		
120	135105	Friction, [6L50] (2-6 Clutch) (.084") (24 External Teeth) (6-3/8"ID) (1-Sided Friction) 2007-Up	5	

120	135113A	Steel, [6L80 / 6L90] (2-6 Clutch) (.087") (24 Teeth) (6-5/8"ID) {6L80-5ea / 6L90-6ea} 2006-Up	5-6	
121	135116	Steel, [6L50] (2-6 Clutch) (.060") (12 Teeth) (6-3/8"ID) (Waved) 2007-Up	1	
121	135116A	Steel, [6L80 / 6L90] (2-6 Clutch) (.060") (12 Teeth) (6-5/8"ID) (Waved) 2006-Up	1	
124	135110	Steel, [6L50] (1-2-3-4 Clutch) (.068") (9 Teeth) (6-1/8"ID) 2007-Up	5	
124	135110A	Steel, [6L80 / 6L90] (1-2-3-4 Clutch) (.068") (9 Teeth) (6-3/8"ID) {6L80-5ea / 6L90-6ea} 2006-Up	5-6	
125	135117	Steel, [6L50] (1-2-3-4 Clutch) (.067") (9 Teeth) (6-1/8"ID) (Wavy) 2007-Up	1	
125	135117A	Steel, [6L80] (1-2-3-4 Clutch) (.053") (9 Teeth) (6-3/8"ID) (Wavy) 2006-Up	1	
125	135117C	Steel, [6L90] (1-2-3-4 Clutch) (.053") (9 Wide & 18 Narrow Teeth) (6-3/8"ID) (Wavy) 2007-Up	1	
126	135111	Steel, [6L50] (3-5 Reverse Clutch) (.098") (36 Teeth) (6-3/8"ID) 2007-Up	4	
126	135111A	Steel, [6L80 / 6L90] (3-5 Reverse Clutch) (.106") (36 Teeth) (6-3/4"ID) {6L80-4ea / 6L90-5ea} 2006-Up	4-5	
127	135118	Steel, [6L50] (3-5 Reverse Clutch) (.054") (6 Teeth) (6-3/8"ID) (Wavy) 2007-Up	1	
127	135118A	Steel, [6L80] (3-5 Reverse Clutch) (.054") (12 Teeth) (6-3/4"ID) (Wavy) 2006-Up	1	
127	135118C	Steel, [6L90] (3-5 Reverse Clutch) (.054") (18 Teeth) (6-3/4"ID) (Wavy) 2007-Up (*Can Use 135112B)	1	
128	135107	Friction, [6L50] (4-5-6 Clutch) (.079") (36 External Teeth) (1-Sided) (4.130"ID) 2007-Up	5	
128	135112A	Steel, [6L80 / 6L90] (4-5-6 Clutch) (.087") (36 Teeth) (4.255"ID) {6L80-6ea / 6L90-7ea} 2006-Up	6-7	
129	135119	Steel, [6L50] (4-5-6 Clutch) (.075") (12 Teeth) (4.135"ID) (Wavy) 2007-Up	1	
129	135119A	Steel, [6L80 / 6L90] (4-5-6 Clutch) (.063") (12 Teeth) (4.250"ID) (Wavy) 2006-Up	1	
134	135114	Steel, [6L50] (Low / Reverse Clutch) (.068") (24 Teeth) (6-3/16"ID) 2007-Up	6	
134	135114A	Steel, [6L80 / 6L90] (Low / Reverse Clutch) (.068") (36 Teeth) (6"ID) {6L80-5ea / 6L90-6ea} 06-Up	5-6	
135	135120	Steel, [6L50] (Low / Reverse Clutch) (.068") (8 Teeth) (6-3/16"ID) (Waved) 2007-Up	1	
135	135120A	Steel, [6L80 / 6L90] (Low / Reverse Clutch) (.085") (18 Teeth) (6"ID) (Waved) 2006-Up	1	
	K135110A	Steel Module, [6L80] 2006-Up	1	
		PRESSURE PLATES		
140	135715	Pressure Plate, [6L50] (2-6 Clutch) (.195") (24 Teeth) (6-3/8"ID) (Stepped) 2007-Up	1	
140	135715A	Pressure Plate, [6L80 / 6L90] (2-6 Clutch) (.120") (24 Teeth) (6-5/8"OD) (Stepped) 2006-Up	1	
144	135716	Pressure Plate, [6L50] (1-2-3-4 Clutch) (Top) (.280") (9 Teeth) (6-1/8"ID) 2007-Up	1	
144	135716A	Pressure Plate, [6L80 / 6L90] (1-2-3-4 Clutch) (.315") (9 Teeth) (6-3/8"ID) 2006-Up	1	
146	135717	Pressure Plate, [6L50] (3-5 Reverse Clutch) (.323") (36 Teeth) (6-3/8"ID) 2007-Up	1	
146	135717A	Pressure Plate, [6L80 / 6L90] (3-5 Reverse Clutch) (.430") (36 Teeth) (6-3/4"ID) 2006-Up	1	
148	135718	Pressure Plate, [6L50] (4-5-6 Clutch) (.198") (Stepped) (36 Teeth) (4.133"ID) 2007-Up	1	
148	135718A	Pressure Plate/Retainer, [6L50] (4-5-6 Clutch) (.150"Thick) (36 Teeth) (2.605"ID) 2007-Up	1	
148	135718B	Pressure Plate, [6L80 / 6L90] (4-5-6 Clutch) (.157") (Stepped) (36 Teeth) (4.255"ID) 2006-Up	1	
148	135718C	Pressure Plate/Retainer, [6L80 / 6L90] (4-5-6 Clutch) (.300"Thick) (36 Teeth) (2.605"ID) 2006-Up	1	
154	135719	Pressure Plate, [6L50] (Low / Reverse Clutch) (.312") (24 Teeth) (6-3/16"ID) 2007-Up	1	
154	135719A	Pressure Plate, [6L80 / 6L90] (Low / Reverse Clutch) (.230") (36 Teeth) (6"ID) (Stepped) 2006-Up	1	
		SEALING RINGS		
	K135903	Ring Kit, [6L45 / 6L50] 2007-Up	1	
	K135903A	Ring Kit, [6L80 / 6L90] 2006-Up	1	
176	135301	Ring, [6L50 / 6L80 / 6L90] (Outer Slide) (.074"Thick) (4.240"OD) (Teflon) 2006-Up	1	
177	135302	Ring, [6L50] (4-5-6 Clutch Drum Input Shaft) (1.155"OD) (Solid) (Teflon) 2007-Up	3	
177	135302A	Ring, [6L80 / 6L90] (4-5-6 Clutch Drum Input Shaft) (1.385"OD) (Solid) (Teflon) 2006-Up	3	

179	135303V	Ring, [6L50] (Stator) (.104"Thick) (With 2-Inside Diameter Ears) (Vespel) 2007-Up	3	
179	135303AV	Ring, [6L80 / 6L90] (Stator) (.096"Thick) (No Ears) (Vespel) 2006-Up	3	
		WASHERS & BEARINGS		
211	135401A	Washer, [6L50 / 6L80 / 6L90] (Stator to 1-2-3-4 & 3-5 Reverse Clutch Drum) (.060") (3.855"OD) (3.270"ID) (With 2-Split Tabs) (Plastic) 2006-Up	1	
226	135415	Bearing W/Races, [6L50] (2-6 & Low / Reverse Support to Front Output Planet Sun Gear) (.141"Thick) (2.520"OD) (1.740"ID) 2007-Up	1	
226	135415A	Bearing W/Races, [6L80 / 6L90] (2-6 & Low / Reverse Support to Front Output Planet Sun Gear) (.141"Thick) (2.735"OD) (1.880"ID) 2006-Up	1	
228	135416A	Caged Needle Bearing, [6L50 / 6L80 / 6L90] (1-2-3-4 & 3-5 Reverse Drum) (Front) (42-Needles) (3.405"OD) (3.25"ID)	1	
232	135417A	Bearing W/Races, [6L50 / 6L80 / 6L90] (4-5-6 Clutch Drum to Hub) (.140"Thick) (1.330"OD) (.690"ID) (With 3-Ears) 2006-Up	1	
235	135418A	Race, [6L50 / 6L80 / 6L90] (4-5-6 Clutch Hub to 1-2-3-4 Clutch Hub) (Cupped) (2.265"OD) (1.385"ID) 2006-Up	1	
236	135419A	Bearing W/Race, [6L50 / 6L80 / 6L90] (4-5-6 Clutch Hub to 1-2-3-4 Clutch Hub) (2.465"OD) (1.100"ID) 2006-Up	1	
238	135402A	Washer, [6L50 / 6L80] (Input Planet to 4-5-6 Clutch Drum) (.062") (3.540"OD) (2.985"ID) (4-Tab) (2-Tabs Split)	1	
238	135402B	Washer, [6L90] (Input Planet to 4-5-6 Clutch Drum) (.062") (3.540"OD) (2.985"ID) (6-Tab) (2-Tabs Split) 2007-Up	1	
241	135420A	Bearing W/Races, [6L50 / 6L80 / 6L90] (Input Sun Gear to 4-5-6 Clutch Drum) (.190"Thick) (2.592"OD) (1.860"ID)	1	
243	135421A	Bearing W/Races, [6L50 / 6L80 / 6L90] (1-2-3-4 Clutch Hub to 3-5 Reverse Clutch Hub) (.320") (2.505"OD) (1.545"ID)	1	
244	135422A	Bearing W/Races, [6L50 / 6L80 / 6L90] (3-5 Reverse & 2-6 Clutch Hub to 2-6 & Low / Reverse Support) (.250"Thick) (2.830"OD) (2.050"ID) 2006-Up	1	
246	135423	Bearng W/Races, [6L50] (Front Output Sun Gear to Rear Output Sun Gear) (.160") (2.185"OD) (1.305"ID)	1	
246	135423A	Bearing W/Races, [6L80 / 6L90] (Front Output Sun Gear to Rear Output Sun Gear) (.220") (1.480"OD) (1.430"ID)	1	
250	135424	Caged Needle Bearing, [6L50] (Output Planet) (Front) (.335") (2.680"OD) (32-Needles) (Cast # 24225777)	1	
250	135424A	Caged Needle Bearing, [6L80 / 6L90] (Output Planet) (Front) (.335") (3.200"OD) (37-Needles) (Cast # 24224853)	1	
251	135425	Bearing W/Races, [6L50] (Output Planet to Output Shaft) (.197") (2.220"OD) (1.265"ID) 2007-Up	1	
251	135425A	Bearing W/Races, [6L80 / 6L90] (Output Planet to Output Shaft) (.197") (2.490"OD) (1.515"ID) 2006-Up	1	
260	135426A	Bearing W/Races, [6L50 / 6L80 / 6L90] (Output Shaft to Case) (.152"Thick) (3.365"OD) (2.500"ID) 2006-Up	1	
	135427	Caged Needle Bearing, [6L50] (Case to Output Shaft) (.810"Wide) (2.040"OD) (Cast # DB-603-81)	1	
	135428	Caged Needle Bearing, [6L50] (Extension Housing) (2WD Bolt-on Yoke) (43-Needles) (2.050"OD) (Cast # FC69886 INA)	1	
		GASKETS & RUBBER COMPONENTS		
300	135500	Gasket, [6L50] (Pan) (17-Bolt) (16-3/4"Long) (Bonded Rubber) 2007-Up	1	
300	135500A	Gasket, [6L80] (Pan) (18-Bolt) (16-3/4"Long) (Bonded Rubber) 2006-Up	1	
300	135500C	Gasket, [6L90] (Pan) (18-Bolt) (18-1/8"Long) (Bonded Rubber) 2007-Up	1	
311	135516	O-Ring, [6L50] (Bell Housing Pump Body to Case) (9-1/2"OD) 2007-Up	1	
311	135516A	O-Ring, [6L80 / 6L90] (Bell Housing Pump Body to Case) (10-1/2"OD) 2006-Up	1	
313	135170A	O-Ring, [6L50 / 6L80 / 6L90] (Outer Slide) (.095"Thick) (4.240"OD) 2006-Up	1	
314	135170B	Seal, [6L80 / 6L90] (Pump Slide) (Rubber) 2006-Up	1	
315	135170C	Seal, [6L50 / 6L80 / 6L90] (Pump Slide) (Teflon) 2006-Up	1	

	135525	Gasket, [6L50] (Valve Body) (Bonded to Spacer Plate) 2007-Up	1	
	135525A	Gasket, [6L80 / 6L90] (Valve Body) (Bonded to Valve Body Plate) 2006-Up	1	
342	135562A	Boot Seal, [6L50 / 6L80 / 6L90] (Valve Body to 2-6 & Low / Reverse Support) (4-Inline Rubber Boots) 2006-Up	1	
348	135271	Lathe Cut Seal, [6L50] (Extension Housing to Case) (5.695"OD) 2007-Up	1	
348	135271A	Lathe Cut Seal, [6L80 / 6L90] (Extension Housing to Case) (6-9/16"OD) 2006-Up	1	
380	135511	O-Ring, [6L50] (Input Shaft) 2007-Up	1	
380	135511A	O-Ring, [6L80 / 6L90] (Input Shaft) 2006-Up	1	
		TECHNICAL MANUALS		
	TM6L80	Technical Manual, [6L80]	1	ATSG
		ELECTRICAL COMPONENTS		
410	135991A	Neutral Safety Switch, [6L50 / 6L80 / 6L90] (6-Wire Green Connector) (6" Long Wire Harness) 2006-Up	1	
420	135649A	Solenoid Assembly, [6L50 / 6L80 / 6L90] (8-Enclosed Solenoids) (16-Pin Connector) 2006-Up	1	
438	135954A	Sensor, [6L50 / 6L80 / 6L90] (Input & Output Speed) (3-Wire Connector) 2006-Up	1	
444	135983A	Case Connector, [6L50 / 6L80 / 6L90] (Black Plastic) (1.920" Long) (*Uses 3 / O-Rings) 2006-Up	1	
		MISCELLANEOUS COMPONENTS		
476	135441	Spacer, [6L50] (Output Planet Ring Gear) (.275" Thick) (5-5/16"ID) 2007-Up	1	
476	135441A	Spacer, [6L80 / 6L90] (Output Planet Ring Gear) (.250" Thick) (6-1/2"ID) 2006-Up	1	
		HARD PARTS		
520	135915	Stator, [6L50] (Pump) (8-7/8" Tall) (27-Splines) (Aluminum Ring Lands) 2007-Up	1	
520	135915A	Stator, [6L80 / 6L90] (Pump) (9-1/8" Tall) (36-Splines) (Steel Ring Lands) 2006-Up	1	
		PUMP COMPONENTS		
532	135927A	Rotor, [6L50 / 6L80 / 6L90] (Pump) (13-Vane) (.708" Thick) (3.415"OD) (1.832"ID) 2006-Up	1	
533	135926A	Vane, [6L50 / 6L80 / 6L90] (Pump) (.079" Thick) (.706" Tall) (.534"Wide) 2006-Up	13	
534	135928A	Outer Slide, [6L50 / 6L80 / 6L90] (Pump) (.708" Thick) (3.695"ID) 2006-Up	1	
535	135923A	Pin, [6L50 / 6L80 / 6L90] (Pump Slide Pivot Pin) (Spring # 540 Locks Onto This Pin) 2006-Up	1	
536	135922A	Spring, [6L50 / 6L80 / 6L90] (Outer Pump Slide) (.675"OD) (1.900" Long) 2006-Up	1	
538	135910A	Ring, [6L50 / 6L80 / 6L90] (Pump Vane) (.102" Thick) (2.625"OD) (2.355"ID) 2006-Up	2	
539	135929A	Rotor Guide, [6L50 / 6L80 / 6L90] (Pump) (13-Vane) (12-Openings) (1.845"ID) 2006-Up	1	
540	135921A	Spring, [6L50 /6L80 /6L90] (Pump Slide Pivot Spring) (Locks to Pin) (.317" Long) (2.75"OD) 2006-Up	1	
		HARD PARTS (CONTINUED)		
548	135775	Apply Ring, [6L50] (3-5 Reverse Clutch) (1.815" Thick) (7-1/8"OD) (Cast # 225748) 2007-Up	1	
548	135775A	Apply Ring, [6L80] (3-5 Reverse Clutch) (1.840" Thick) (7-5/8"OD) (Cast # 24633) 2006-Up	1	
548	135775C	Apply Ring, [6L90] (3-5 Reverse Clutch) (2.000" Thick) (7-5/8"OD) (Cast # 26735) 2007-Up	1	
554	135732	Drum, [6L50] (4-5-6 Clutch W/Shaft) (5-Clutch) (13-5/8" Long) (5.405"OD) (3.960" Wide) (89 Teeth Ring Gear)	1	
554	135732A	Drum, [6L80] (4-5-6 Clutch W/Shaft) (6-Clutch) (13-5/8" Long) (5.640"OD) (3.750" Wide) (93 Teeth Ring Gear)	1	
554	135732C	Drum, [6L90] (4-5-6 Clutch W/Shaft) (7-Clutch) (13-3/4" Long) (5.640"OD) (3.810" Wide) (93 Teeth Ring Gear)	1	
555	135733	Drum, [6L50] (1-2-3-4 & 3-5 Reverse Clutch) (7-3/4"OD) 2007-Up	1	
555	135733A	Drum, [6L80] (1-2-3-4 & 3-5 Reverse Clutch) (8-5/16"OD) (4.555" Tall) 2006-Up	1	
555	135733C	Drum, [6L90] (1-2-3-4 & 3-5 Reverse Clutch) (8-5/16"OD) (4.930" Tall) 2007-Up	1	

574	135741	Hub W/Shaft, [6L50] (4-5-6 Clutch) (9" Long) (4.020"OD) (.855"OD Shaft) 2007-Up	1	
574	135741A	Hub W/Shaft, [6L80 / 6L90] (4-5-6 Clutch) (9-1/8" Long) (4.175"OD) (.950"OD Shaft) 2006-Up	1	
575	135742	Hub W/Hollow Shaft, [6L50] (1-2-3-4 Clutch) (10-3/8" Tall) (6"OD) 2007-Up	1	
575	135742A	Hub W/Hollow Shaft, [6L80 / 6L90] (1-2-3-4 Clutch) (11" Tall) (6-3/16"OD) 2006-Up	1	
578	135743	Hub W/Hollow Shaft, [6L50] (3-5 Reverse & 2-6 Clutch) (7-5/8" Tall) (6-3/16"OD) 2007-Up	1	
578	135743A	Hub W/Hollow Shaft, [6L80 / 6L90] (3-5 Reverse & 2-6 Clutch) (8" Tall) (6-1/2"OD) 2006-Up	1	
582	135747	Planet, [6L50] (Input) (4 Gear) (Steel) (20 Teeth Pinions) (4.130"OD) 2007-Up	1	
582	135747A	Planet, [6L80] (Input) (4 Gear) (Steel) (22 Teeth Pinions) (4.480"OD) 2006-Up	1	
582	135747C	Planet, [6L90] (Input) (6 Gear) (Steel) (22 Teeth Pinions) (4.480"OD) 2007-Up	1	
584	135731	Planet, [6L50] (Output) (4.740" Thick Through Center) (5.040"OD) (34-Outer Lugs) 2007-Up	1	
584	135731A	Planet, [6L80] (Output) (4.675" Thick Through Center) (6-5/16"OD) (No Outer Lugs) 2006-Up	1	
584	135731C	Planet, [6L90] (Output) (5.195" Thick Through Center) (6-5/16"OD) (No Outer Lugs) 2007-Up	1	
594	135758	Ring Gear, [6L50] (Output Planet) (Front) (97 Teeth) (.885" Thick) 2007-Up	1	
594	135758D	Ring Gear, [6L50] (Output Planet) (Rear) (97 Teeth) (1.450" Thick) 2007-Up	1	
594	135758A	Ring Gear, [6L80] (Output Planet) (Front) (92 Teeth) (.830" Thick) 2006-Up	1	
594	135758AA	Ring Gear, [6L80] (Output Planet) (Rear) (92 Teeth) (1.260" Thick) 2006-Up	1	
594	135758C	Ring Gear, [6L90] (Output Planet) (Front) (92 Teeth) (.945" Thick) 2007-Up	1	
594	135758CA	Ring Gear, [6L90] (Output Planet) (Rear) (92 Teeth) (1.600" Thick) 2007-Up	1	
612	135750	Sun Gear, [6L50] (Input Planet) (49 Teeth) (1.025" Thick) (2.450"OD) 2007-Up	1	
612	135750A	Sun Gear, [6L80 / 6L90] (Input Planet) (50 Teeth) (1.045" Thick) (2.540"OD) 2006-Up	1	
614	135748	Sun Gear, [6L50] (Output Planet) (Front) (47 Teeth) (1-Wide & 1-Narrow Groove) (2.570"OD) 2007-Up	1	
614	135748D	Sun Gear, [6L50] (Output Planet) (Rear) (37 Teeth) (2-Narrow Grooves) (2.050"OD) 2007-Up	1	
614	135748A	Sun Gear, [6L80 / 6L90] (Output Planet) (Front) (46 Teeth) (1-Wide Groove) (3.115"OD) 2006-Up	1	
614	135748AA	Sun Gear, [6L80] (Output Planet) (Rear) (35 Teeth) (1-Narrow Groove) (1.275" Thick) (2.500"OD) 2006-Up	1	
614	135748C	Sun Gear, [6L90] (Output Planet) (Rear) (35 Teeth) (2-Narrow Groove) (1.720" Thick) (2.500"OD) 2007-Up	1	
632	135825	Support, [6L50] (2-6 & Low / Reverse) (6-Clutch Low / Reverse) (5.555" Tall at Edge) (Aluminum) 2007-Up	1	
632	135825A	Support, [6L80] (2-6 & Low / Reverse) (5-Clutch Low / Reverse) (5.035" Tall at Edge) (Aluminum) 2006-Up	1	
632	135825C	Support, [6L90] (2-6 & Low / Reverse) (6-Clutch Low / Reverse) (5.315" Tall at Edge) (Aluminum) 2007-Up	1	
644	135727	Sprag Assembly, [6L50] (Low) (30-Element) 2007-Up	1	
644	135727A	Sprag Assembly, [6L80] (Low) (38-Element) 2006-Up	1	
644	135727C	Sprag Assembly, [6L90] (Low) (30-Element) 2007-Up	1	
678	135858	Output Shaft, [6L50] (2WD) (11" Overall Length) (6-1/4"OD Shell) 2007-Up	1	
678	135858A	Output Shaft, [6L80] (2WD) (15-1/8" Overall Length) (7-1/2"OD Shell) 2006-Up	1	
678	135858AA	Output Shaft, [6L80] (Corvette) (11-1/4" Overall) (5-3/4" Splines) (7-1/2"OD Shell) 06-Up	1	
678	135858C	Output Shaft, [6L90] (4X4) (9-1/4" Overall Length) (7-1/2"OD Shell) 2007-Up	1	
		VALVE BODIES		
740	135754	Valve Body, [6L50] 2007-Up	1	
740	135754A	Valve Body, [6L80 / 6L90] 2006-Up	1	
		VALVE BODY COMPONENTS		

741	135924A	Check Ball, [6L50 / 6L80 / 6L90] (Valve Body) (.250"OD White Plastic) 2006-Up	7	
		HARD PARTS (CONTINUED)		
750	135703	Bell Housing, [6L50] (Pump Body) (5-1/8" Top Bolts) (Cast # 24242678) (*With Rotor Kit) 2007-Up	1	
750	135703D	Bell Housing, [6L50] (Pump Body) (Cast # 24226870) (*With Rotor Kit) 2007-Up	1	
750	135703A	Bell Housing, [6L80] (Corvette) (Rear Half) (Pump Body) (2-5/8"Thick) (Cast # 24236119) (*With Rotor Kit) 2006-Up	1	
750	135703AA	Bell Housing, [6L80] (Corvette) (Front Half) (Cast # 24236121) 2006-Up	1	
750	135703C	Bell Housing, [6L90] (Chevy V-8) (Pump Body) (Cast # 24239892) (*With Rotor Kit) 2007-Up	1	
760	135701	Case, [6L50] (17-Pan Bolts) (16-3/4" From Bell to Extension Housing) (Has Linkage Seal on Each Side)	1	
760	135701A	Case, [6L80] (18-Pan Bolts) (16-5/8" From Bell to Extension Housing) 2006-Up	1	
760	135701C	Case, [6L90] (18-Pan Bolts) (17-3/4" From Bell to Extension Housing) 2007-Up	1	
765	135801	Pan, [6L50] (17-Bolt) (With Bottom Drain Plug) 2007-Up	1	
765	135801A	Pan, [6L80] (18-Bolt) (With Bottom Drain Plug) 2006-Up	1	
765	135801C	Pan, [6L90] (18-Bolt) (No Drain Plug) 2007-Up	1	
770	135702AA	Extension Housing, [6L80] (4X4) (8-Bolts to Transfer Case) (Aluminum) (1-5/8" Thick) (Cast # 24226019) 2006-Up	1	
770	135702A	Extension Housing, [6L80] (2WD) (5-7/8" Tall) (2-Bolt Mount) (2.690"OD Rear Seal) 2006-Up	1	
798	135081	Nut, [6L50] (Yoke to Output Shaft) (30mm) 2007-Up	1	
841	135902	Yoke, [6L50] (Drive Shaft) (3-Hole) (1.670"OD) (2.190" Tall) 2007-Up	1	
	K135928	Kit, Snap Ring, [6L50]	1	
	K135928A	Kit, Snap Ring, [6L80 / 6L90]	1	
956	135852	Piston/Housing, [6L50] (1-2-3-4 Clutch) (1.590" Thick) (6-5/8"OD) (3-1/8"ID) (Aluminum) 2007-Up	1	
956	135852A	Piston/Housing, [6L80 / 6L90] (1-2-3-4 Clutch) (1.508" Thick) (7-1/8"OD) (3-1/8"ID) (Aluminum) 2006-Up	1	
960	135923	Piston, [6L50] (2-6 Clutch) (.830" Thick) (7-1/4"OD) (6-3/16"ID) (Bonded) (20-Notches) 2007-Up	1	
960	135923A	Piston, [6L80 / 6L90] (2-6 Clutch) (.875" Thick) (7-15/16"OD) (6-1/2"ID) (Bonded) (18-Notch) 2006-Up	1	
	K135940	Piston Kit, [6L80 / 6L90] (Bonded) (5-Pieces) 2006-Up	1	
962	135764	Piston, [6L50] (1-2-3-4 Clutch) (1.400" Thick) (6-5/8"OD) (3.030"ID) (Aluminum) (Cast # 24241073) 2007-Up	1	
962	135764A	Piston, [6L80 / 6L90] (1-2-3-4 Clutch) (1.415" Thick) (7-1/8"OD) (3.030"ID) (Aluminum) (Cast # 24238700) 2006-Up	1	
964	135922	Piston, [6L50] (4-5-6 Clutch) (.965" Thick) (4.600"OD) (1.335"ID) (Bonded) 2007-Up	1	
964	135922A	Piston, [6L80 / 6L90] (4-5-6 Clutch) (.805" Thick) (4.960"OD) (1.445"ID) (Bonded) 2006-Up	1	
965	135766	Piston, [6L50] (3-5 Reverse Clutch) (1.400" Tall) (7-1/4"OD) (5.150"ID) (Cast # 24238561) 07-Up	1	
965	135766A	Piston, [6L80 / 6L90] (3-5 Reverse Clutch) (1.500" Tall) (7-3/4"OD) (5.600"ID) (Cast # 24238697) 2006-Up	1	
967	135924	Piston, [6L50] (Low / Reverse Clutch) (.605" Thick) (7"OD) (4-5/8"ID) (Bonded) (8-Notch) 2007-Up	1	
967	135924A	Piston, [6L80 / 6L90] (Low / Reverse Clutch) (.705" Thick) (7"OD) (3-3/8"ID) (Bonded) (12-Notch) 2006-Up	1	
970	135872	Spring, [6L50] (2-6 Clutch Return) (.053" Thick) (7-1/4"OD) (20-Fingers) 2007-Up	1	
970	135872A	Spring, [6L80 / 6L90] (2-6 Clutch Return) (.062" Thick) (7-15/16"OD) (18-Fingers) 2006-Up	1	
972	135873	Spring, [6L50] (1-2-3-4 Clutch Return) (.061" Thick) (5.210"OD) (12-Fingers) 2007-Up	1	
972	135873A	Spring, [6L80 / 6L90] (1-2-3-4 Clutch Return) (.061" Thick) (5.405"OD) (12-Fingers) 2006-Up	1	
974	135874	Spring, [6L50] (4-5-6 Clutch Return) (.068" Thick) (4.335"OD) (10-Fingers) 2007-Up	1	
974	135874A	Spring, [6L80 / 6L90] (4-5-6 Clutch Return) (.075" Thick) (4.710"OD) (10-Fingers) 2006-Up	1	

975	135875	Spring, [6L50] (3-5 Reverse Clutch) (6-3/8”OD) (16-Fingers) 2007-Up	1	
975	135875A	Spring, [6L80 / 6L90] (3-5 Reverse Clutch) (6-13/16”OD) (16-Fingers) 2006-Up	1	
977	135876	Spring, [6L50] (Low /Reverse Clutch Return) (.062” Thick) (5.652”OD) (16-Fingers) 2007-Up	1	
977	135876A	Spring, [6L80 / 6L90] (Low / Reverse Clutch Return) (.069” Thick) (5.335”OD) (12-Finger) 06-Up	1	
982	135920	Retainer/Piston, [6L50] (1-2-3-4 Clutch Spring) (Bonded) (5.305”OD) (2.705”ID) 2007-Up	1	
982	135920A	Retainer/Piston, [6L80 / 6L90] (1-2-3-4 Clutch Spring) (Bonded) (5.435”OD) (2.705”ID) 2006-Up	1	
984	135921	Retainer/Piston, [6L50] (4-5-6 Clutch Return Spring) (Bonded) (.880” Thick) (4.365”OD) (1.100”ID)	1	
984	135921A	Retainer/Piston, [6L80 / 6L90] (4-5-6 Clutch Return Spring) (Bonded) (.810” Thick) (4.760”OD) (1.200”ID)	1	
991	135687A	Detent Spring, [6L50 / 6L80 / 6L90] (Rooster Comb) (6-1/4” Long) 2006-Up	1	
991	135684A	Rooster Comb, [6L50 / 6L80 / 6L90] 2006-Up	1	
991	135675	Manual Shaft, [6L50] (10-3/16” Long) 2007-Up	1	
991	165375A	Manual Shaft, [6L80 / 6L90] (3-7/8” Long) 2006-Up	1	
994	135677	Park Rod Actuator, [6L50] (12-1/2” Long) 2007-Up	1	
994	135677A	Park Rod Actuator, [6L80] (12-3/4” Long) 2006-Up	1	
994	135677C	Park Rod Actuator, [6L90] (14” Long) 2007-Up	1	
995	K135678	Park Pawl Assembly, [6L50 / 6L80] (.350” Thick Park Pawl) 2006-Up	1	
995	K135678A	Park Pawl Assembly, [6L90] (.435” Thick Park Pawl) 2007-Up	1	

6T70/75 (GM) / 6F50/55 (FORD)

FWD 6 Speed

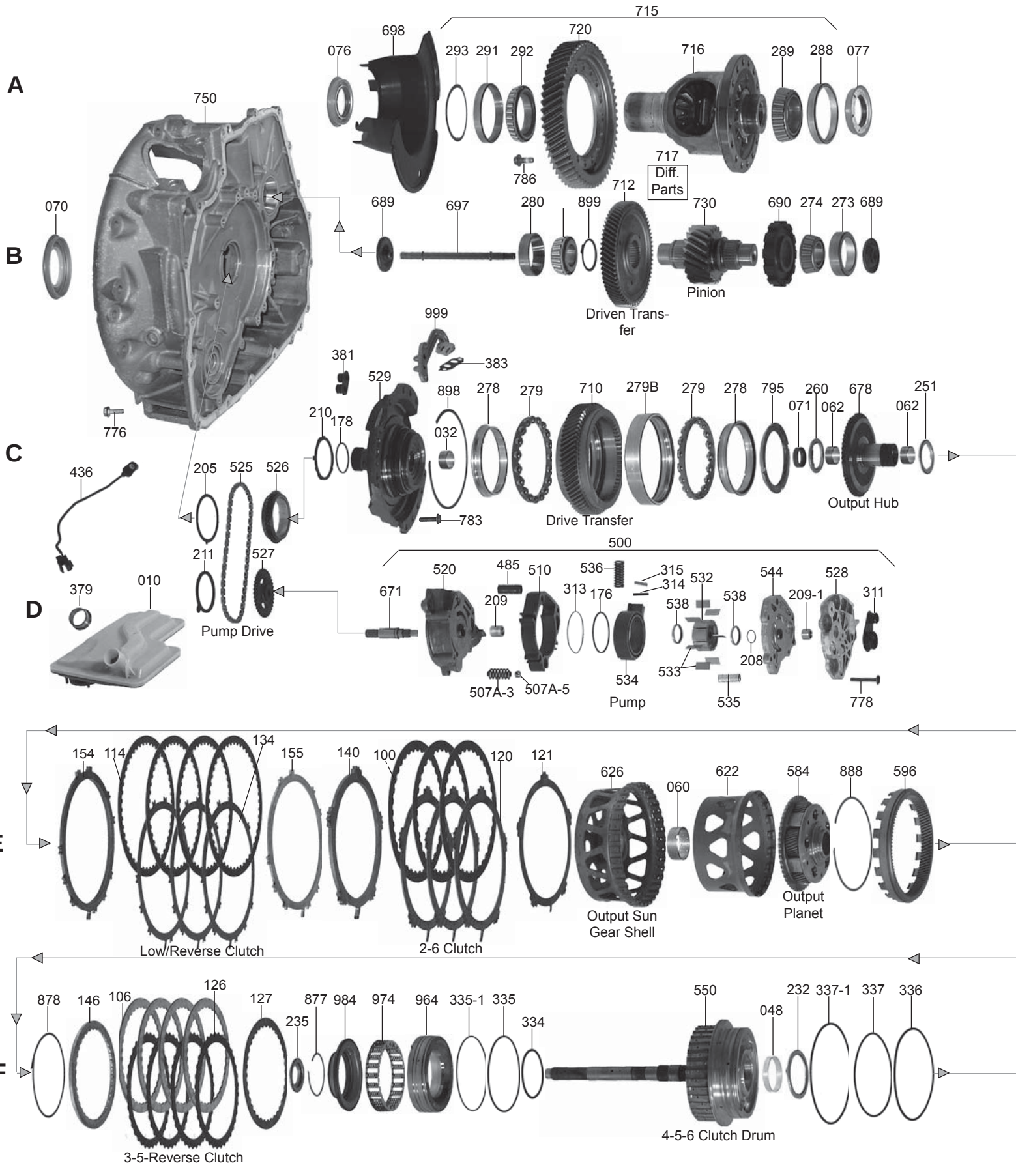

6T70/75 (GM) / 6F50/55 (FORD)

FWD 6 Speed

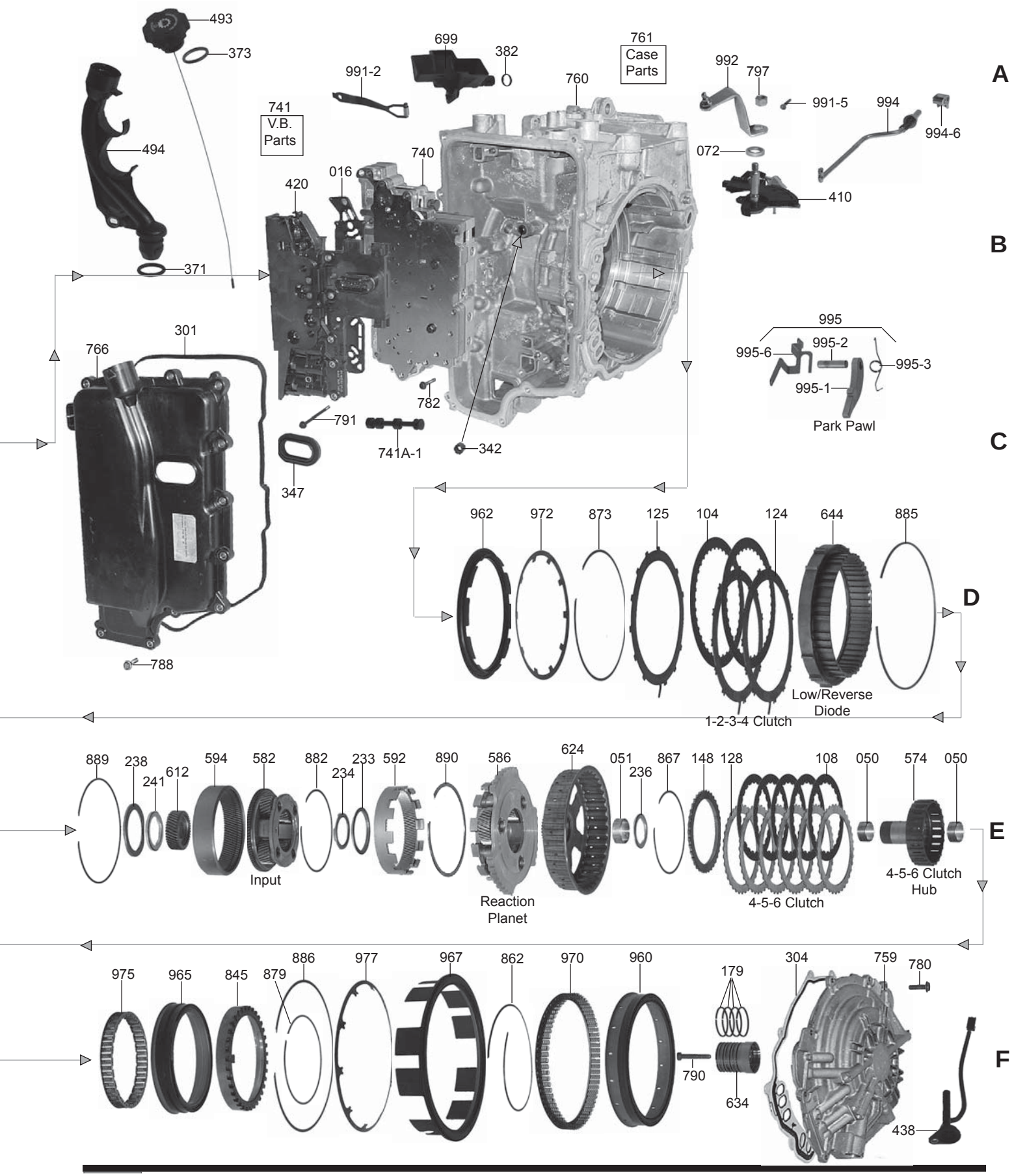

6T70/75 (GM) / 6F50/55 (FORD)

ILL#	PART#	DESCRIPTION	QTY	REF #
		OVERHAUL KITS		
	K115900P	Overhaul Kit, [6F50 / 6F55] (Ford) (With Pistons) (6-Speed) (FWD) 2007-Up	1	
	K115900AP	Overhaul Kit, [6T70 / 6T75] (GM) (With Pistons) (6-Speed) (FWD) 2007-Up	1	
	K115900	Overhaul Kit, [6F50 / 6F55] (Ford) (Without Pistons) (6-Speed) (FWD) 2007-Up	1	
	K115900A	Overhaul Kit, [6T70 / 6T75] (GM) (Without Pistons) (6-Speed) (FWD) 2007-Up	1	
		MASTER L/STEEL KITS		
	DK11500P-S	Master L/Steels Kit, [6F50 / 6F55] (Ford) (With Pistons) (6-Speed) 2007-Up	1	
	DK11500AP-S	Master L/Steels Kit, [6T70 / 6T75] (GM) (With Pistons) (6-Speed) 2007-Up	1	
	DK11500-S	Master L/Steels Kit, [6F50 / 6F55] (Ford) (Without Pistons) (6-Speed) 2007-Up	1	
	DK11500A-S	Master L/Steels Kit, [6T70 / 6T75] (GM) (Without Pistons) (6-Speed) 2007-Up	1	
	DK11500HE-S	Master L/Steels Kit, [6F55] (Ford) (Without Pistons) (Hi-Energy Frictions) 2009-Up	1	
		MASTER W/STEEL KITS		
	DK11500P	Master W/Steels Kit, [6F50 / 6F55] (Ford) (With Pistons) (6-Speed) 2007-Up	1	
	DK11500AP	Master W/Steels Kit, [6T70 / 6T75] (GM) (With Pistons) (6-Speed) 2007-Up	1	
	DK11500	Master W/Steels Kit, [6F50 / 6F55] (Ford) (Without Pistons) (6-Speed) 2007-Up	1	
	DK11500A	Master W/Steels Kit, [6T70 / 6T75] (GM) (Without Pistons) (6-Speed) 2007-Up	1	
	DK11500HE	Master W/Steels Kit, [6F55] (Ford) (Without Pistons) (Hi-Energy Frictions) 2009-Up	1	
		FILTERS		
010	115710	Filter, [6F50 / 6F55 / 6T70 / 6T75] (5/8" Tall Oval Pick-Up) 2007-Up	1	
016	115711	Filter Plate, [6F50 / 6F55] (Solenoid Assembly to Valve Body) (Plastic Beaded) 2007-Up	1	
		BUSHINGS		
	K115901	Bushing Kit, [6F50 / 6F55] 2007-Up	1	
032	115001	Bushing, [6F50 / 6F55] (Converter Reactor) (Rear) (.870"ID) (1.000"OD) (.745" Long) 2007-Up	1	
048	115012	Bushing, [6F50 / 6F55] (4-5-6 Clutch Drum) (Rear) (.450" Wide) (1.970"OD) (1.830"ID) 2007-Up	1	
050	115013	Bushing, [6F50 / 6F55] (4-5-6 Clutch Hub) (.400" Wide) (1.125"OD) (1.005"ID) 2007-Up	2	
051	115017	Bushing, [6F50 / 6F55] (Reaction Sun Gear & Shell) (.670" Wide) (1.510"OD) (1.380"ID) 2007-Up	1	
060	115019	Bushing, [6F50 / 6F55] (Output Sun Gear & Shel) (.745" Wide) (1.545"OD) (1.425"ID) 2007-Up	1	
062	115023	Bushing, [6F50 / 6F55] (Output Hub) (.320" Wide) (.985"OD) (.870"ID) 2007-Up	2	
		METAL CLAD SEALS		
070	115151	Seal, [6F50 / 6F55] (Front) (Converter) (2.845"OD) 2007-Up	1	
071	115152	Seal, [6F50 / 6F55] (Converter Reactor) (Rear) (Inner) (.302" Thick) (1.185"OD) 2007-Up	1	
072	115155	Seal, [6F50 / 6F55] (Shift Lever) (.350" Thick) (.755"OD) (.467"ID) (Rubber) 2007-Up	1	
077	115154	Seal, [6F50 / 6F55] (Axle) (Case Side) (.540" Thick) (2.945"OD) (Left Side) 2007-Up	1	
076	115153	Seal, [6F50 / 6F55] (Axle) (Converter Side) (Right Side) 2007-Up	1	
		FRICTION CLUTCH		
100	115101	Friction, [6F50 / 6F55] (2-6 Clutch) (.064") (36 Teeth) (8-1/4"OD) 2007-Up	3	
104	115103	Friction, [6F50 / 6F55] (1-2-3-4 Clutch) (.065") (36 Teeth) (8-1/4"OD) 2007-Up	2	
106	115105	Friction, [6F50 / 6F55] (3-5-Reverse Clutch) (.063") (36 Outer Teeth) (5.630"ID) 2007-Up	4	

108	115107	Friction, [6F50 / 6F55] (4-5-6 Clutch) (.063") (24 Teeth) (4.760"OD) 2007-Up	6	
114	115109	Friction, [6F50 / 6F55] (Low / Reverse Clutch) (.065") (48 Teeth) (8-5/8"OD) 2007-Up	4	
	K115100	Friction Module, [6F50 / 6F55] 2007-Up	1	
	K115100A	Friction Module, [6T70 / 6T75] 2007-Up	1	
	K115100HE	Friction Module, [6F55] (Hi-Energy Frictions) 2009-Up	1	
		STEEL CLUTCH		
120	115110	Steel, [6F50 / 6F55] (2-6 Clutch) (.115") (6 Teeth) (7-3/16"ID) 2007-Up	3	
121	115116	Steel, [6F50 / 6F55] (2-6 Clutch) (.045") (6 Teeth) (Waved) (7-1/4"ID) 2007-Up	1	
124	115111	Steel, [6F50 / 6F55] (1-2-3-4 Clutch) (.085") (13 Teeth) (6-15/16"ID) 2007-Up	2	
125	115117	Steel, [6F50 / 6F55] (1-2-3-4 Clutch) (Waved) (.065") (13 Teeth) (6-15/16"ID) 2007-Up	1	
126	115112	Steel, [6F50 / 6F55] (3-5-Reverse Clutch) (.115") (36 Inner Teeth) (6-9/16"OD) 2007-Up	4	
127	115118	Steel, [6F50 / 6F55] (3-5-Reverse Clutch) (.030") (36 Inner Teeth) (Waved) (6-9/16"OD) 2007-Up	1	
128	115113	Steel, [6F50 / 6F55] (4-5-6 Clutch) (.115") (36 Teeth) (3.925"ID) 2007-Up	6	
134	115114	Steel, [6F50 / 6F55] (Low / Reverse Clutch) (.070") (11 Teeth) (7-3/4"ID) 2007-Up	3	
	K115110	Steel Module, [6F50 / 6F55] 2007-Up	1	
		CLUTCH PRESSURE PLATES		
140	115715	Pressure Plate, [6F50 / 6F55] (2-6 Clutch) (.260") (6 Teeth) (7-3/16"ID) 2007-Up	1	
146	115716	Pressure Plate, [6F50 / 6F55] (3-5-Reverse Clutch) (.125") (36 Teeth Internal) (Stepped) (6-9/16"OD) 2007-Up	1	
148	115717	Pressure Plate, [6F50 / 6F55] (4-5-6 Clutch) (.155") (36 Teeth) (Stepped) (3.925"ID) 2007-Up	1	
154	115718	Pressure Plate, [6F50 / 6F55] (Low / Reverse Clutch) (.196") (11 Teeth) (Stepped) (7-3/4"ID) (Cast # 7T4P-7D408-AC)	1	
155	115719	Apply Plate, [6F50 / 6F55] (Low / Reverse Clutch) (.153") (11 Teeth) (7-3/4"ID) (Cast # 7T4P-7G486-AA) 2007-Up	1	
		OIL SEALING RINGS		
	K115903	Ring Kit, [6F50 / 6F55] 2007-Up	1	
176	115301	Ring, [6F50 / 6F55] (Pump Slide) (.076" Thick) (2.543"OD) 2007-Up	1	
178	115302	Ring, [6F50 / 6F55] (Converter Reactor Shaft) (.078" Thick) (Solid, Teflon) 2007-Up	1	
179	115303	Ring, [6F50 / 6F55] (3-5-Reverse & 4-5-6 Clutch) (.093" Thick) (1.835"OD) (Solid, Teflon) 2007-Up	4	
		WASHERS & BEARINGS		
205	115401	Washer, [6F50 / 6F55] (Bell Housing to Pump Drive Sprocket) (1-Outer Tab) (.063" Thick) (2.485"OD) (2.135"ID) (Black Plastic) 2007-Up	1	
	115445	Shim, [6F50 / 6F55] (Pump Shaft to Pump Plate) (.037" Thick) (.733"OD) (.586"ID) 2007-Up	1	
209	115415	Caged Needle Bearing, [6F50 / 6F55] (Pump Shaft to Cover) (With Seal) (.820"OD) (.583"ID) (Cast # F-554549)	1	
209	115415A	Caged Needle Bearing, [6F50 / 6F55] (Pump Shaft to Plate) (.425" Thick) (.605"OD) (.308"ID)	1	
210	115402	Washer, [6F50 / 6F55] (Bell Housing to Converter Reactor Shaft) (4-Tabs) (3-Slots) (.097") (2.130"ID) (Plastic)	1	
211	115403	Washer, [6F50 / 6F55] (Bell Housing to Driven Pump Sprocket) (1-Outer Tab) (.117" Thick) (2.240"OD) (1.890"ID) (Black Plastic) 2007-Up	1	
232	115416	Bearing W/Races, [6F50 / 6F55] (4-5-6 Clutch Drum to Rear Cover) (.126") (2.863"OD) (2.215"ID) 2007-Up	1	
233	115417	Bearing W/Races, [6F50 / 6F55] (Input Planet to Reaction Planet) (.112") (2.900"OD) (2.380"ID) 2007-Up	1	
234	115418	Bearing W/Races, [6F50] (Input Sun Gear to Reaction Planet) (.175") (2.310"OD) (1.638"ID) 2007-Up	1	

6T70/75 (GM) / 6F50/55 (FORD)

235	115419	Bearing W/Races, [6F50 / 6F55] (4-5-6 Clutch Hub to Drum) (.131") (2.030"OD) (1.098"ID) 2007-Up	1	
236	115422	Bearing W/Races, [6F50 / 6F55] (Reaction Sun Gear Shell to 4-5-6 Clutch Hub) 2007-Up	1	
238	115420	Bearing W/Races, [6F50 / 6F55] (Output Planet to Input Planet) (.180") (3.340"OD) (2.530"ID) 2007-Up	1	
241	115421	Bearing W/Races, [6F50 / 6F55] (Output Planet to Input Sun Gear) (.115") (2.195"OD) (1.660"ID) 2007-Up	1	
251	115422	Bearing W/Races, [6F50 / 6F55] (Output Hub to Output Sun Gear Shell) 2007-Up	1	
260	115422	Bearing W/Races, [6F50 / 6F55] (Converter Reactor to Output Hub) (.125") (2.035"OD) (1.468"ID) 2007-Up	1	
273	115978	Cup Race, [6F50 / 6F55] (Pinion to Case) 2007-Up	1	
274	115977	Cone Bearing, [6F50 / 6F55] (Pinion to Case) 2007-Up	1	
278	115446	Inner Race, [6F50 / 6F55] (Drive Transfer Gear to Converter Reactor) (.590" Thick) (4.295"OD) (3.740"ID)	2	
279	115423	Ball Bearing, [6F50 / 6F55] (Drive Transfer Gear to Converter Reactor) (19-Balls) (Plastic Cage)(4.905"ID) 2007-Up	2	
279	115447	Outer Race, [6F50 / 6F55] (Goes In Transfer Drive Gear) (Double Sided) (.925" Thick) (5.315"OD) 2007-Up	1	
280	115978	Cup Race, [6F50 / 6F55] (Pinion to Bell Housing) (Cast # HTF 322/329) (.707" Thick) (2.559"OD) 2007-Up	2	
281	115977	Cone Bearing, [6F50 / 6F55] (Pinion to Bell Housing) (17-Rollers) (Cast # HTF 322/329) (.891" Thick) (1.262" ID) 2007-Up	2	
288	115978A	Cup Race, [6F50 / 6F55] (Differential to Case) (Cast # NP 417060) (.724" Thick) (.545"OD) 2007-Up	1	
289	115977A	Cone Bearing, [6F50 / 6F55] (Differential to Case) (22-Rollers) (Cast # NP 327312) (.913") (2.162"ID) 2007-Up	1	
291	115978B	Cup Race, [6F50 / 6F55] (Differential Bearing to Bell Housing) (Cast # NP26679 P900 555R) (.490") (3.545"OD) 2007-Up	1	
292	115977B	Cone Bearing, [6F50 / 6F55] (Differential to Bell Housing) (28-Rollers) (Cast # NP 266799) (.672") (2.350"ID) 2007-Up	1	
293	115448	Shim, [6F50 / 6F55] (Differential Cup Race to Bell Housing) (.028" Thick) (3.530"OD) (3.075"ID) 2007-Up	1	
		GASKETS & RUBBER COMPONENTS		
301	115500	Gasket, [6F50 / 6F55 / 6T70 / 6T75] (Side Pan) (Molded Rubber) 2007-Up	1	
304	115502	Gasket, [6F50 / 6F55] (Rear Cover) (Metal, Beaded) 2007-Up	1	
311	115274	Seal, [6F50 / 6F55] (Pump Assembly to Case) (Twin Boots on Oval Base) (.460" Tall) (2.420" Long) (1.285" Wide) 2007-Up	1	
313	115170	O-Ring, [6F50 /6F55] (Pump Slide) (Under Ring # 176) 2007-Up	1	
314	115170A	Seal, [6F50 / 6F55] (Pump Slide) (Rubber) (.102"OD) (.863" Long) 2007-Up	1	
315	115170B	Seal, [6F50 / 6F55] (Pump Slide) (Teflon) (.093" Thick) (.863" Long) 2007-Up	1	
342	115527	Boot, [6F50 / 6F55] (Valve Body to Case) (Round Fluted) (.495" Tall) (.510"OD) (.325"ID) 2007-Up	1	
347	115521	Boot, [6F50 / 6F55] (Solenoid Assembly to Side Pan) (Orange) 2007-Up	1	
371	115291	O-Ring, [6F50 / 6F55] (Filler Tube) (.205" Thick) (1.545"OD) 2007-Up	1	
373	115292	O-Ring, [6F50 / 6F55] (Dipstick) (.190" Thick) (1.500"OD) 2007-Up	1	
379	115509	Seal, [6F50 / 6F55] (Filter to Pump) (1.270"OD) (.974"ID) 2007-Up	1	
381	115274	Seal, [6F50 / 6F55] (Converter Reactor to Case) (Twin Boots on Oval Base) (.460" Tall) (1.350" Long) (.750" Wide) 2007-Up	1	
383	115522	Gasket, [6F50 / 6F55] (Converter Reactor to Tube Set) (Metal) (4-Holes) 2007-Up	1	
	K115900-3	Gasket Kit, [6F50 / 6F55] (Valve Body) 2007-Up	1	
	K115900A-3	Gasket Kit, [6T70 / 6T75] (Valve Body) 2007-Up	1	

6T70/75 (GM) / 6F50/55 (FORD)

		ELECTRICAL COMPONENTS		
410	115992	Switch, [6F50 / 6F55] (PRNDL) (6-Wire Connector) (4" Wire Harness) (2-1/2" Shaft With Rooster Comb) (Cast # 7T4P-7H557-AG) 2007-Up	1	
410	115992A	Switch, [6T70 / 6T65] (PRNDL) (6-Wire Connector) (13-1/2" Wire Harness) (2-1/2" Shaft With Rooster Comb) 2007-Up	1	
420	115949	Solenoid Assembly, [6F50 / 6F55] (18-Pin Connector) (Cast # 7T4P-7Z369-AE) 2007-Up	1	
420	115949A	Solenoid Assembly, [6T70 / 6T75] 2007-Up	1	
436	115958	Sensor, [6F50 / 6F55] (Output Speed) (3-Prong Connector & Wire Harness 12-1/2" Long) 2007-Up	1	8A8Z-7M101A
436	115958A	Sensor, [6T70 / 6T75] (Output Speed) (2-Prong Connector With Wire Harness) 2007-Up	1	
438	115954	Sensor, [6F50 / 6F55] (Input Speed) (3-Prong Connector & Wire Harness 11-3/4" Long) 07-Up	1	8A8Z-7H103A
438	115954A	Sensor, [6T70 / 6T75] (Input Speed) (2-Prong Connector With Wire Harness) 2007-Up	1	
		MISC COMPONENTS		
493	115599	Dipstick, [6F50 / 6F55] (24-3/4" Long Round Cable Type) 2007-Up	1	
494	115599A	Filler Tube, [6F50 / 6F55] (Plastic) (11" Tall) 2007-Up	1	
		HARD PARTS		
500	115912	Pump Assembly, [6F50 / 6F55] (7-Vane) (Cast # 062780355) 2007-Up	1	
525	115885	Chain, [6F50 / 6F55] (Pump Drive) (42-Links) (84-Pins) (.240" Thick at Pins) 2007-Up	1	
526	115818	Sprocket, [6F50 / 6F55] (Pump Drive) (With 2-ID Flats For Converter Hub) (37 Teeth) (.602") (2.058"ID) 2007-Up	1	
527	115811	Sprocket, [6F50 / 6F55] (Pump Driven) (With 14-ID Splines For Shaft) (37 Teeth) (.595" Thick) (2.847"OD)	1	
529	115825	Converter Reactor, [6F50 / 6F55] (Bolts to Bell Housing) (*Also Called the Drive Transfer Gear Support)	1	
532	115927	Rotor, [6F50 / 6F55] (Pump) (7-Vane) (.865" Thick) (1.800"OD) (14-Spline) 2007-Up	1	
533	115926	Vane, [6F50 / 6F55] (Pump) (.078" Thick) (.865" Long) (.466" Wide) 2007-Up	7	
534	115928	Slide, [6F50 / 6F55] (Pump Outer) (.868" Thick) (2.120"OD) 2007-Up	1	
535	115923	Pivot Pin, [6F50 / 6F55] (Pump Slide) (.312"OD) (1.112" Long) 2007-Up	1	
536	115922	Spring, [6F50 / 6F55] (Pump Slide) 2007-Up	1	
538	115910	Ring, [6F50 / 6F55] (Pump Vane) (.106" Thick) (1.185"OD) (.955"ID) 2007-Up	2	
550	115732	Drum W/Shaft, [6F50 / 6F55] (4-5-6 Clutch) (6 Clutch) (12-11/16" Tall) (From the Splined Area of Drum to Top of Snap Ring Groove is .234") 2007-Up	1	
550	115732A	Drum W/Shaft, [6T70 / 6T75] (4-5-6 Clutch) (From the Splined Area to Top of Snap Ring Groove is .180") 2007-Up	1	
574	115741	Hub, [6F50 / 6F55] (4-5-6 Clutch) (1.740" Tall) (1.385"OD) 2007-Up	1	
582	115747	Planet. [6F50 / 6F55] (Input) (4 Gear) (Steel) (24 Teeth Pinions) 2007-Up	1	
584	115731	Planet, [6F50 / 6F55] (Output) (5 Gear) (Steel) (29 Teeth Pinions) (54-Lugs) 2007-Up	1	
586	115749	Planet, [6F50 / 6F55] (Reaction) (3 Gear) (Steel) (32 Teeth Pinions) (12-Lugs) 2007-Up	1	
592	115757	Ring Gear, [6F50 / 6F55] (Input Planet) (99 Teeth) (12-Lugs) (1.225") (5.475"OD) (Locks onto React Planet)	1	
594	115758	Ring Gear, [6F50 / 6F55] (Output Planet) (99 Teeth) (1.355" Thick) (5.470"OD) (Locks onto Input Planet)	1	
596	115759	Ring Gear, [6F50 / 6F55] (Reaction Planet) (98 Teeth) (18-Lugs) (1.090") (6-9/16"OD) (Locks onto Output Shell)	1	
612	115750	Sun Gear, [6F50 / 6F55] (Input Planet) (41 Teeth) (.750" Thick) (2.320"OD) 2007-Up	1	
622	115764	Shell, [6F50 / 6F55] (Output Planet) (6-3/8"OD) (12-Triangle Holes In OD) (18-Wide Lugs Inside Big End)	1	
624	115756	Sun Gear & Shell, [6F50 / 6F55] (Reaction) (34 Teeth) (2.135"OD Sun Gear) (36 Teeth Clutch Hub) (7-9/16"OD) 2007-Up	1	

6T70/75 (GM) / 6F50/55 (FORD)

626	115755	Sun Gear & Shell, [6F50 / 6F55] (Output) (41 Teeth Sun Gear) (36 Teeth Clutch Hub) (6-3/4"OD) (16-Triangle Holes In OD)	1	
634	115917	Ring Tower, [6F50 / 6F55] (4-5-6 Clutch) (Bolts to Ring Cover) (4-Ring) (3-Bolt) (2.067" Long) 2007-Up	1	
644	115727	Diode, [6F50 / 6F55] (Low / Reverse) (10-Lugs) (36 Teeth Clutch Hub) (1.730" Thick) 2007-Up	1	
671	115874	Shaft, [6F50 / 6F55] (Pump) (3.150" Long) (14-Splines on Each End) 2007-Up	1	
678	115742	Hub, [6F50 / 6F55] (Output) (48 Teeth) (2.400" Tall) (1.425"OD Neck) 2007-Up	1	
689	115628	Seal, [6F50 / 6F55] (Pinion Shaft Lube Tube) (Both Sides) (.595" Thick) (2.040"OD) 2007-Up	2	
690	115824	Park Gear, [6F50 / 6F55] (12-Lugs) (.627" Wide at Lugs) (3.960"OD) 2007-Up	1	
697	115679A	Lube Tube, [6F50 / 6F55] (Pinion Shaft) (7" Long) 2007-Up	1	
698	115843	Oil Baffle, [6F50 / 6F55] (Differential) (1-Bolt to Bell) (Black Plastic) (Cast # 7F4P-7F409-AB) 2007-Up	1	
699	115844	Oil Baffle, [6F50 / 6F55] (Differential) (2-Bolt to Case) (With Check Ball) 2007-Up	1	
710	115194	Gear, [6F50 /6F55] (Drive Transfer) (69 Teeth) (1.490" Thick) (.988" Wide) (6-9/16"OD) (5.310"ID) 2007-Up	1	
712	115195	Transfer Gear, [6F50 / 6F55] (Driven) (68 Teeth) (.896" Thick) (6-1/2"OD) 2007-Up	1	
715	115181A	Differential Housing, [6F50 / 6F55] (FWD) (59 Teeth) (1-Groove) (16-Bolt Ring Gear) 2007-Up	1	
715	115181AA	Differential Housing, [6F50 / 6F55] (FWD) (59 Teeth) (2-Grooves) (16-Bolt Ring Gear) 07-Up	1	
715	115181AB	Differential Housing, [6F50 / 6F55] (FWD) (61 Teeth) (2-Grooves) (16-Bolt Ring Gear) 07-Up	1	
715	115181AC	Differential Housing, [6F50 / 6F55] (FWD) (61 Teeth) (3-Grooves) (16-Bolt Ring Gear) 07-Up	1	
715	115181B	Differential Assembly, [6F50 / 6F55] (4x4) (59 Teeth) (1-Groove) (16-Bolt Ring Gear) (2.320"OD Neck on Bell Housing Side)	1	
715	115181BA	Differential Assembly, [6F50 / 6F55] (4x4) (59 Teeth) (2-Grooves) (16-Bolt Ring Gear) (2.320"OD Neck on Bell Housing) 2007-Up	1	
715	115181BB	Differential Assembly, [6F50 / 6F55] (4x4) (61 Teeth) (2-Grooves) (16-Bolt Ring Gear) (2.320"OD Neck on Bell Housing Side) 2007-Up	1	
715	115181BC	Differential Assembly, [6F50 / 6F55] (4x4) (61 Teeth) (3-Grooves) (16-Bolt Ring Gear) (2.320"OD Neck on Bell Housing Side) 2007-Up	1	
716	115180	Differential Housing, [6F50 / 6F55] (FWD) (6-3/8" Tall)	1	
716	115180A	Differential Housing, [6F50 / 6F55] (4X4) (7-3/4" Tall) (16-Bolt) (2.320"OD of Neck on Bell Housing Side)	1	
720	115190	Ring Gear, [6F50 / 6F55] (59 Teeth) (1-Groove) (16-Bolt) 2007-Up	1	
730	115196	Pinion Gear, [6F50 / 6F55] (21 Teeth) (1-Groove) (1.445" Wide at Gear) (5.700" Long) 07-Up	1	
		VALVE BODIES		
740	115754	Valve Body, [6F50 / 6F55] (Cast # 7T4P-7H195-AF) 2007-Up	1	
750	115703	Bell Housing, [6F50 / 6F55] (AWD) (Cast # RF7T4P-7976-BD) (2-3/4" Top Bolts) (2.870"OD Axle Seal Hole) (9-Holes for Transfer Case)	1	
759	115702	Rear Cover, [6F50 / 6F55] (8-Bolt) (Cast # RF8A8P-7B332-AA) 2007-Up	1	
760	115701	Case, [6F50 / 6F55] (Ford) (Cast # RF7T4P-7006-BE) (14-Pan Bolts) (18-Threaded Holes to Bell) (4-Threaded Bosses on Top) 2007-Up	1	
766	115801	Pan, [6F50 / 6F55] (Side) (14-Bolt) (Plastic) 2007-Up	1	
795	115081	Nut, [6F50 / 6F55] (Holds Drive Transfer Gear to Converter Reactor) (Stepped With 4-Notches) (.275" Thick) (4.255"OD) (3.270"ID) 2007-Up	1	
797	115082	Nut, [6F50 / 6F55] (External Linkage) (Holds Shift Lever on) 2007-Up	1	
845	115852	Piston Housing, [6F50 / 6F55] (3-5-Reverse Clutch) (Steel) (36-Outer Lugs) (1-Inner Lug) (.805") (6-5/16"OD)	1	
	K115928	Kit, Snap Ring, [6F50 / 6F55] 2007-Up	1	
960	115762	Piston, [6F50 / 6F55] (2-6 Clutch) (Bonded) (1.250" Tall) (8-1/8"OD) (6-7/8"ID) 2007-Up	1	
962	115763	Piston, [6F50 / 6F55] (1-2-3-4 Clutch) (Bonded) (.640" Thick) (8"OD) (6-3/4"ID) 2007-Up	1	

964	115764	Piston, [6F50 / 6F55] (4-5-6 Clutch) (Aluminum) (1.125” Thick) (4.585”OD) (2.735”ID) 07-Up	1	
965	115765	Piston, [6F50 / 6F55] (3-5-Reverse Clutch) (Bonded) (1.150” Thick) (6-5/16”OD) (5.130”ID) 2007-Up	1	
967	115766	Piston, [6F50 / 6F55] (Low / Reverse Clutch) (Bonded) (1.815” Thick) (9-3/8”OD) 2007-Up	1	
970	115970	Spring /Retainer, [6F50 / 6F55] (2-6 Clutch Return) (72-Springs) (7”OD) 2007-Up	1	
972	115940	Spring, [6F50 / 6F55] (1-2-3-4 Clutch Return) (10-Lugs) (.064” Thick) (8-1/4”OD) 2007-Up	1	
974	115971	Spring, [6F50 / 6F55] (4-5-6 Clutch Return) (22-Springs) (.775” Thick) (4.120”OD) (3.445”ID) 2007-Up	1	
975	115972	Spring /Retainer, [6F50 / 6F55] (3-5-Reverse Clutch Return) (50-Springs) (.750” Thick) (5.855”OD)	1	
977	115941	Spring, [6F50 / 6F55] (Low / Reverse Clutch Return) (.063” Thick) (9-3/8”OD) 2007-Up	1	
984	115862	Retainer/Piston, [6F50 / 6F55] (4-5-6 Clutch) (Bonded) (.845” Thick) (4.315”OD) (2.610”ID) 2007-Up	1	
991	115687	Detent Spring, [6F50 / 6F55] (Valve Body) (1-Bolt) (.950” Wide) (4.340” Long) 2007-Up	1	
991	115675A	Nail, [6F50 / 6F55] (Holds PRNDL Switch In Case) (1-1/4” Long) 2007-Up	1	
992	115675	Shift Lever, [6F50 / 6F55] (External) (“L” Shaped) (.902” Wide) (Has a .277”OD Ball) 2007-Up	1	
994	115677	Park Rod Actuator, [6F50 / 6F55] (11-1/2” Long) 2007-Up	1	
994	115677A	Guide, [6F50 / 6F55] (Park Rod Actuator) (Held In Case By 2-Pins) 2007-Up	1	
995	K115678	Park Pawl Assembly, [6F50 / 6F55] (3-Pieces) 2007-Up	1	
995	115677B	Bracket, [6F50 / 6F55] (Park Rod) (2-Bolt to Case) (Cast #7T4P-7D419-AC) 2007-Up	1	
999	K115679	Tube Set, [6F50 / 6F55] (Converter Reactor) (4-Bolt) (6” Long) 2007-Up	1	

ALLISON 1000/2000/2400

RWD 5 Speed

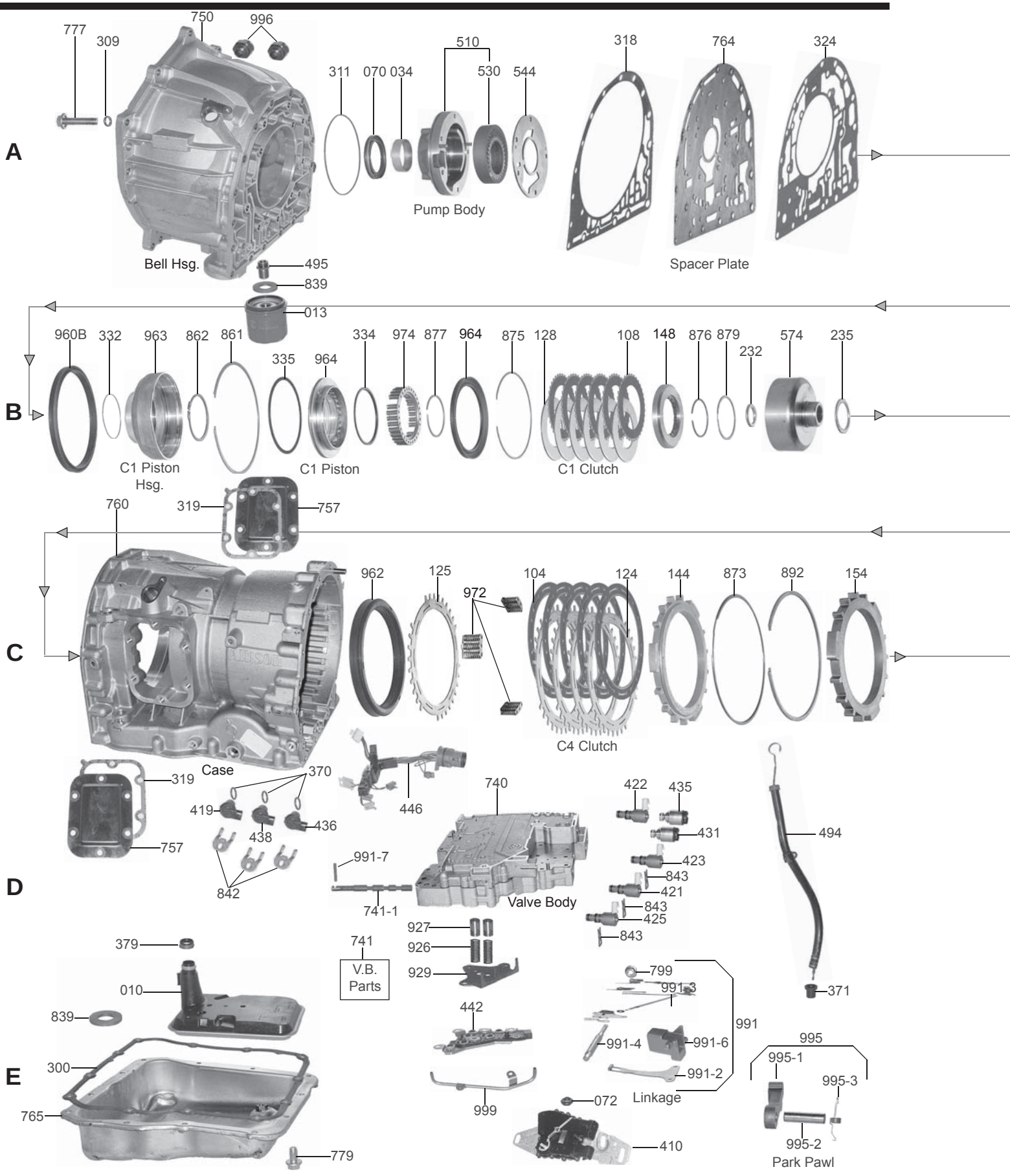

ALLISON 1000/2000/2400

RWD 5 Speed

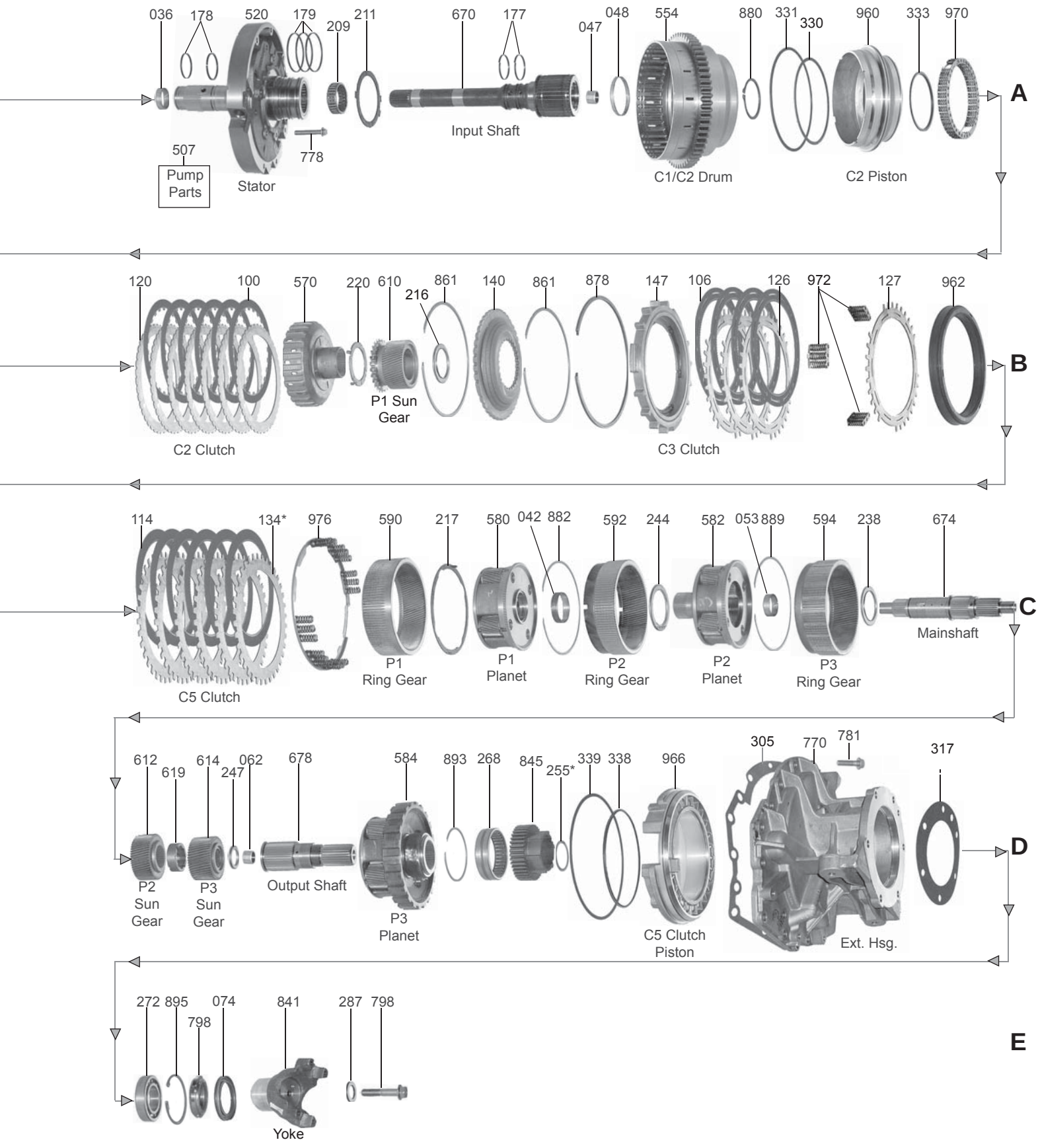

ALLISON 1000/2000/2400

ILL#	PART#	DESCRIPTION	QTY	REF #
		OVERHAUL KITS		
	K37900	Overhaul Kit, [1000 / 2000 / 2400] (Allison) (Without Bonded Pistons) 2000-05 (5-Speed)	1	
	K37900A	Overhaul Kit, [1000 / 2000 / 2400] (Allison) (Without Bonded Pistons) 2006-Up (6-Speed)	1	
	K37900P	Overhaul Kit, [1000 / 2000 / 2400] (Allison) (With Bonded Pistons) 2000-05 (5-Speed)	1	
	K37900AP	Overhaul Kit, [1000 / 2000 / 2400] (Allison) (With Bonded Pistons) 2006-Up (6-Speed)	1	
		MASTER L/STEEL KIT		
	DK3700-S	Master L/Steels Kit, [1000 / 2000 / 2400] (Allison) (Without Bonded Pistons) 2000-05 (5-Speed)	1	
	DK3700A-S	Master L/Steels Kit, [1000 / 2000 / 2400] (Allison) (Without Bonded Pistons) 2006-Up (6-Speed)	1	
	DK3700P-S	Master L/Steels Kit, [1000 / 2000 / 2400] (Allison) (With Molded Pistons) 2000-05 (5-Speed)	1	
	DK3700AP-S	Master L/Steels Kit, [1000 / 2000 / 2400] (Allison) (With Bonded Pistons) 2006-Up (6-Speed)	1	
		MASTER W/STEEL KIT		
	DK3700	Master W/Steels Kit, [1000 / 2000 / 2400] (Allison) (Without Bonded Pistons) 2000-05 (5-Speed)	1	
	DK3700A	Master W/Steels Kit, [1000 / 2000 / 2400] (Allison) (Without Bonded Pistons) 2006-Up (6-Speed)	1	
	DK3700P	Master W/Steels Kit, [1000 / 2000 / 2400] (Allison) (With Molded Pistons) 2000-05 (5-Speed)	1	
	DK3700AP	Master W/Steels Kit, [1000 / 2000 / 2400] (Allison) (With Bonded Pistons) 2006-Up (6-Speed)	1	
		FILTER		
010	37711	Filter, [1000 / 2000] (Allison) (2WD) & (4x4) (Shallow Pan) (Black) 2000-Up	1	29537965
010	37710	Filter, [1000 / 2000] (Allison) (Deep Pan) (White) 2000-Up	1	29537966
		FILTER KIT		
	FK37710	Filter Kit, [1000 / 2000] (Allison) (2WD) & (4x4) (Shallow Pan) (Black) 2000-Up	1	
	FK37711	Filter Kit, [1000 / 2000] (Allison) (Deep Pan) (White) 2000-Up	1	
		MISC. FILTERS		
013	37712	Filter, [1000] (Allison) (Spin-on) (External) 2000-Up	1	29531007
		BUSHINGS		
	K37901	Bushing Kit, [1000 / 2000] (Allison) 2000-Up	1	
034	37005	Bushing, [1000 / 2000] (Allison) (Pump Body) 2000-Up	1	29536703
036	37006	Bushing, [1000 / 2000] (Allison) (Stator) (Front) 2000-Up	1	
042	37010	Bushing, [1000 / 2000] (Allison) (P1-Planet) (1.990”ID) 2000-Up	1	
047	37007	Bushing, [1000 / 2000] (Allison) (Input Shaft) (Rear) (.790”ID) 2000-Up	1	
048	37009	Bushing, [1000 / 2000] (Allison) (C1 / C2-Drum) 2000-Up	1	
053	37002A	Bushing, [1000 / 2000] (Allison) (P2-Planet) (1.440”ID) 2000-Up	1	
062	37004A	Bushing, [1000 / 2000] (Allison) (Output Shaft Pilot) (.793”ID) 2000-Up	1	
		METAL CLAD SEALS		
070	37151	Seal, [1000 / 2000] (Allison) (Front) (Pump) 2000-Up	1	29536299
072	38511	Seal, [1000 / 2000] (Allison) (Manual Lever) 2000-Up	1	8623056
074	11850	Seal, [1000 / 2000] (Allison) (Rear) (2WD) & (4x4) 2000-Up	1	29536379
		FRICTION CLUTCH		
100	37102	Friction, [1000 / 2000] (Allison) (C2-Clutch) (.097”) (24 Teeth) 2000-Up	6	29530313

100	K37102Z	Friction/Steel Kit, [1000 / 2000] (Allison) (C2-Clutch) ("Z" Pak) 2000-Up	1	
100	K37102HP	Friction/Steel Kit, [1000 / 2000] (Allison) (C2-Clutch) (.069") (Hi-Performance Red) (Kolene Steel Plates) 2000-05	1	
100	K37102AHP	Friction/Steel Kit, [1000 / 2000] (Allison) (C2-Clutch) (.069") (Hi-Performance Red) (Kolene Steel Plates) 2006-Up	1	
104	37103	Friction, [1000 / 2000] (Allison) (C4-Clutch) (.103") (117 Teeth) (8-11/16"OD) (Has 11-Slots In the Lining) 2000-Up (*Also Fits C3-Clutch #106)	4-9	29531049
104	K37104HP	Friction/Steel Kit, [1000 / 2000] (Allison) (C4-Clutch) (.084") (Hi-Performance Red) (Kolene Steel Plates) 2000-05	1	
104	K37104AHP	Friction/Steel Kit, [1000 / 2000] (Allison) (C4-Clutch) (.084") (Hi-Performance Red) (Kolene Steel Plates) 2006-Up	1	
106	37103	Friction, [1000 / 2000] (Allison) (C3-Clutch) (.097") 2000-Up	4	29531049
106	K37103HP	Friction/Steel Kit, [1000 / 2000] (Allison) (C4-Clutch) (.084") (Hi-Performance Red) (Kolene Steel Plates) 2000-05	1	
106	K37103AHP	Friction/Steels Kit, [1000 / 2000] (Allison) (C4-Clutch) (.084") (Hi-Performance Red) (Kolene Steel Plates) 2006-Up	1	
108	37101	Friction, [1000 / 2000] (Allison) (C1-Clutch) (.098") (36 External Teeth) 2000-Up	6	29530312
108	K37101HP	Friction/Steels Kit, [1000 / 2000] (Allison) (C1-Clutch) (.067") (Hi-Performance Red) (Kolene Steel Plates) 2000-05	1	
108	K37101AHP	Friction/Steels Kit, [1000 / 2000] (Allison) (C1-Clutch) (.067") (Hi-Performance Red) (Kolene Steel Plates) 2006-Up	1	
114	37105	Friction, [1000 / 2000] (Allison) (C5-Clutch) (.105") (115 Teeth) (8-11/16"OD) 2000-Up	6	29537393
114	K37105HP	Friction/Steels Kit, [1000 / 2000] (Allison) (C5-Clutch) (.071") (High Energy) (Kolene Steel Plates) 2000-Up	1	
	K37100	Friction Module, [1000 / 2000] (Allison) 2000-Up	1	
		STEEL CLUTCH		
120	37112	Steel, [1000 / 2000] (Allison) (C2-Clutch) (.067") (42 Teeth) 2000-Up	7	29530315
120	37112A	Steel, [1000 / 2000] (Allison) (C2-Clutch) (.086") (42 Teeth) 2000-Up	7	
124	37113	Steel, [1000 / 2000] (C4-Clutch) (.098") (*Flat) (27 Teeth) (7-1/8"ID) (Has 11-Slots In Flat Surface) 2000-Up (*Also Fits [1000 / 2000] Allison C3-Clutch #126)	3-7	29531048
125	37122	Steel, [1000 / 2000] (C4-Clutch) (Front) (*Waved) (.125") (27 Narrow Teeth & 3 Wide Teeth) (11-Slots in the Flat Surface) (7-1/8"ID) (1st Design) (Return Springs #972 Snap on the Wide Teeth)	1-2	
125	37122A	Steel, [1000 / 2000] (C4-Clutch) (Front) (.125") (27 Narrow Teeth & 3 Wide Teeth) (14-Slots in the Flat Surface) (7-1/8"ID) (2nd Design) (Return Springs #972 Snap on the Wide Teeth)	1-2	29532192
126	37113	Steel, [1000 / 2000] (Allison) (C3-Clutch) (.098") (27 Teeth) 2000-Up	3	29531048
127		Steel, (*Use 37122 or 37122A)		
128	37111	Steel, [1000 / 2000] (Allison) (C1-Clutch) (.086") (34 Teeth) (Internal Teeth) 2000-Up	6	29530314
134	37116	Steel, [1000 / 2000] (Allison) (C5-Clutch) (.078") (36 Teeth) 2000-Up	6	
134	37115	Steel, [1000 / 2000] (Allison) (C5-Clutch) (.098") (36 Teeth) 2000-Up	6	
134	37115A	Steel, [1000 / 2000] (Allison) (C5-Clutch) (.102") (36 Teeth) 2000-Up	6	
134	37115B	Steel, [1000 / 2000] (Allison) (C5-Clutch) (.108") (36 Teeth) 2000-Up	6	
134	37117	Steel, [1000 / 2000] (Allison) (C5-Clutch) (.118") (36 Teeth) 2000-Up	6	
		CLUTCH PRESSURE PLATES		
140	37131	Pressure Plate, [1000 / 2000] (C2-Clutch) (.253" Thick at Edge) (39 Teeth 3 are Wider) (26-Inner Splines)	1	29531094
144	37132	Pressure Plate, [1000 / 2000] (Allison) (C4-Clutch) (.615" Thick) (12 Narrow Teeth & 3 Wide Teeth)	1	29535640
	37133	Pressure Plate, [1000 / 2000] (Allison) (C3-Clutch) (Bottom) 2000-Up	1	
147	37133A	Pressure Plate, [1000 / 2000] (C3-Clutch) (Top) (.690") (12 Narrow Teeth & 3 Wide Teeth)	1	29535648
148	37130	Pressure Plate, [1000 / 2000] (C1-Clutch) (5.60mm) (17 Internal Teeth) (4.725"OD) 2000-Up	1	29542420
148	37130A	Pressure Plate, [1000 / 2000] (C1-Clutch) (5.90mm) (17 Internal Teeth) (4.725"OD) 2000-Up	1	29542421

ALLISON 1000/2000/2400

148	37130B	Pressure Plate, [1000 / 2000] (C1-Clutch) (6.30mm) (17 Internal Teeth) (4.725”OD) 2000-Up	1	29542422
148	37130C	Pressure Plate, [1000 / 2000] (C1-Clutch) (6.80mm) (17 Internal Teeth) (4.725”OD) 2000-Up	1	29542423
148	37130D	Pressure Plate, [1000 / 2000] (C1-Clutch) (7.30mm) (17 Internal Teeth) (4.725”OD) 2000-Up	1	29542424
154	37134	Pressure Plate, [1000 / 2000] (C5-Clutch) (.707”) (12 Narrow Teeth & 3 Wide Teeth) 00-Up	1	29531058
		VALVE BODY KITS		
	K37908	Shift Kit / Reprogramming, [1000 / 2000 / 2400] (Allison SK) (Heavy Duty) 2001-04 (5-Speed	1	Transgo
	K37908J	Shift Kit, [1000 / 2000 / 2400] (Allison JR.) (*Inscreases Torque Capacity) 2005-06 (6-Speed)	1	Transgo
		OIL SEALING RINGS		
	K37903	Ring Kit, [1000 / 2000] (Allison) (Vespel) 2000-Up	1	
177	37303	Ring, [1000 / 2000] (Allison) (Input Shaft) (Vespel) 2000-Up	2	29536405
178	37300	Ring, [1000 / 2000] (Allison) (Stator Shaft) (Front) (Vespel) 2000-Up	1	
178	37301	Ring, [1000 / 2000] (Allison) (Stator Shaf) (Center) (Vespel) 2000-Up	1	
179	37302	Ring, [1000 / 2000] (Allison) (Stator to C1 / C2-Drum) (Rear) (Vespel) 2000-Up	3	29538940
		WASHERS & BEARINGS		
209	37450	Caged Needle Bearing, [1000 / 2000] (Allison) (Stator Shaft) (Rear) 2000-Up	1	29531013
211	37400	Washer, [1000 / 2000] (Allison) (Stator to C1 / C2-Drum) (3-Tab) (Plastic) 2000-Up	1	29531035
216	37453	Bearing W/Races, [1000 / 2000] (P1-Sun Gear to P1-Planet) (.131” Thick) (2.839”OD) (2.060”ID) 2000-Up (*Also Fits P2-Planet to P2-Sun Gear)	1-2	29531095
217	37402	Washer, [1000 / 2000] (P1-Planet Ring Gear to P2-Planet Ring Gear) (2-Tab Plastic) (6-11/16”OD) 2000-Up	1	29536862
220	37401	Washer, [1000 / 2000] (C2-Clutch Hub to P1-Sun Gear) (.064” Thick) (2.285”ID) (1st Design) 2000-Up	1	
220	37401A	Washer, [1000 / 2000] (C2-Clutch Hub to P1-Sun Gear) (.107” Thick) (3.095”OD) (2.285”ID) (2nd Design) (3.305”OD at Tabs) 2000-Up	1	
220	37401B	Washer, [1000 / 2000] (C2-Clutch Hub to P1-Sun Gear) (.107” Thick) (3.105”OD) (2.285”ID) (3rd Design) (3.425”OD at Tabs) 2000-Up	1	29537515
232	37451	Bearing W/Races, [1000 / 2000] (Input Shaft to C1-Clutch Hub) (1st Design) (1.705”OD) 2000-Up (*Also Fits P3-Sun Gear to Output Shaft)	1-2	29531089
232	37451A	Bearing W/Races, [1000 / 2000] (Input Shaft to C1-Clutch Hub) (2nd Design) (2.120”OD)	1-2	29539501
235	37452	Bearing W/Races, [1000 / 2000] (C1-Clutch Hub to C2-Clutch Hub) (.140” Thick) (2.598”OD) (1.916”ID)	1	29533190
238	37453	Bearing W/Races, [1000 / 2000] (Allison) (P2-Planet to P2-Sun Gear) 2000-Up	1	29531095
244	37454	Bearing W/Races, [1000 / 2000] (P1-Planet to P2-Planet) (.150” Thick) (3.393”OD) (2.490”ID)	1	29531106
247	37451	Bearing W/Races, [1000 / 2000] (Allison) (P3-Sun Gear to Output Shaft) 2000-Up	1	29531089
255	37404	Washer, [1000 / 2000] (Allison) (Output Shaft to Bearing #272) (.275mm) 2000-Up	1	29536850
255	37404A	Washer, [1000 / 2000] (Allison) (Output Shaft to Bearing #272) (.500mm) 2000-Up	1	29536850
255	37404B	Washer, [1000 / 2000] (Allison) (Output Shaft to Bearing #272) (.725mm) 2000-Up	1	29536850
255	37404C	Washer, [1000 / 2000] (Allison) (Output Shaft to Bearing #272) (.955mm) 2000-Up	1	29536850
255	37404D	Washer, [1000 / 2000] (Allison) (Output Shaft to Bearing #272) (1.200mm) 2000-Up	1	29536850
255	37404E	Washer, [1000 / 2000] (Allison) (Output Shaft to Bearing #272) (1.425mm) 2000-Up	1	29536850
255	37404F	Washer, [1000 / 2000] (Allison) (Output Shaft to Bearing #272) (1.650mm) 2000-Up	1	29536850
268	37457	Caged Needle Bearing, [1000 / 2000] (Sits In Extension Housing) (.980” Thick) (3.740”OD) (Cast # INA NK8025)	1	29531151
272	37458	Ball Bearing, [1000 / 2000] (Extension Housing to Output Shaft) (.747” Thick) (3.348”OD) (1.770”ID) (Cast # 6209C350)	1	23047970
287	37746	Washer/Seal, [1000 / 2000] (Allison) (Output Shaft Yoke (2WD) to Bolt) (1.065”OD) 2000-Up	1	29536848
		GASKETS & RUBBER COMPONENTS		
300	37500	Gasket, [1000 / 2000] (Allison) (Bottom Pan) (Molded Rubber) 2001-Up	1	29536526
305	37527	Gasket, [1000 / 2000] (Allison) (Extension Housing) 2000-Up	1	29536941

309	37268	O-Ring, [1000 / 2000] (Allison) (Bell Housing Bolt) (Takes 10) 2000-Up	10	
309	37268B	Washer, [1000 / 2000] (Allison) (Pump Body) (*Brass Update)	10	
311	37877	O-Ring, [1000 / 2000] (Allison) (Pump Body) 2000-Up	1	29537620
317	100129	Gasket, [1000 / 2000] (Allison) (Extension Housing to Transfer Case) 2000-Up	1	
318	37532	Gasket, [1000 / 2000] (Allison) (Bell Housing to Spacer Plate) 2000-Up	1	29536478
319	37509	Gasket, [1000 / 2000] (Allison) (PTO Cover to Case) 2000-Up	2	29531325
324	37533	Gasket, [1000 / 2000] (Allison) (Spacer Plate to Case) 2000-Up	1	29541030
330	37542	Lip Seal, [1000 / 2000] (Allison) (C2-Piston) (Outer) (Small) 2000-Up	1	29542808
331	37542A	Lip Seal, [1000 / 2000] (Allison) (C2-Piston) (Outer) (Large) 2000-Up	1	29542809
332	37541	Lip Seal, [1000 / 2000] (Allison) (C1-Piston Housing) 2000-Up	1	29542812
333	37542B	Lip Seal, [1000 / 2000] (Allison) (C2-Piston) (Inner) 2000-Up	1	29542812
334	37541A	Lip Seal, [1000 / 2000] (Allison) (C1-Piston) (Inner) 2000-Up	1	29531293
335	37541B	Lip Seal, [1000 / 2000] (Allison) (C1-Piston) (Outer) 2000-Up	1	29542809
338	37545	Lip Seal, [1000 / 2000] (Allison) (C5-Piston) (Inner) 2000-Up	1	29536859
339	37545A	Lip Seal, [1000 / 2000] (Allison) (C5-Piston) (Outer) 2000-Up	1	29534894
370	13583A	O-Ring, [1000 / 2000] (Allison) (Speed Sensor) 2000-Up	3	
371	3292	Seal, [1000 / 2000] (Allison) (Dipstick Tube) 2000-Up	1	
379	96503A	Seal, [1000 / 2000] (Allison) (Filter) 2000-Up	1	29535601
	37532	Seal, [1000 / 2000] (Allison) (Drain Plug) 2000-Up	1	
		TECHNICAL MANUALS		
	TM1000/2000	Technical Manual, [1000 / 2000] (Allison) (5-Speed) 2000-Up	1	ATSG
		ELECTRICAL COMPONENTS		
410	77947	Switch, [1000 / /2000] (Allison) (MPLS / PRNDL) (4 & 7-Pin Connectors) (Black Plastic) 2000-02	1	24229422
410	37988	Switch, [1000 / 2000] (MPLS / PRNDL) (2-Connectors) 2001-02 (Brown Plastic) **(*Replaces 77947)**	1	29540479
410	37988A	Switch, [1000 / 2000] (MPLS / PRNDL) (1-Connector) 2003-05	1	29541852
410	37988B	Switch, [1000 / 2000] (Internal Mode) (IMS) 2006-Up (6-Speed)	1	29542692
419	37954	Sensor, [1000 / 2000] (Allison) (Engine Speed) 2000-Up	1	29536408
421	77926	Solenoid, [1000 / 2000] (Allison) (Shift “D”) 2000-Up (*Also Fits “C” & “E” Shift Solenoids)	1-3	29536833
422	77926	Solenoid, [1000 / 2000] (Allison) (Shift “C”) 2000-Up	1	29536833
423	77926	Solenoid, [1000 / 2000] (Allison) (Shift “E”) 2000-Up	1	29536833
425	77942	Solenoid, [1000 / 2000] (Allison) (TCC) (F-Trim) 2000-Up	1	8683187
425	77942	Solenoid, [1000 / 2000] (Allison) (TCC) (Red Connector) (G-Trim) 2004-05	1	
425	37942	Solanoid, [1000 / 2000] (Allison) (TCC PCS) 2006-Up (6-Speed)	1	29541898
431	37959	Solenoid, [1000 / 2000] (Allison) (B-Trim) (.665”OD Snout) 2000-05	1	29533075
431	37959A	Solenoid, [1000 / 2000] (Allison) (B-Trim) (Brown Connector) 2006-Up (6-Speed)	1	
435	37958	Solenoid, [1000 / 2000] (Allison) (A-Trim) (.645”OD Snout) 2000-05	1	29533074
435	37958A	Solenoid, [1000 / 2000] (Allison) (A-Trim) (Black Connector) 2006-Up (6-Speed)	1	
436	37954	Sensor, [1000 / 2000] (Allison) (Output Speed) 2000-Up	1	29536408
438	37954	Sensor, (Turbine Shift Speed) 2000-Up (*Also Fits Engine or Input & Output Speed Sensor)	1-3	29536408
442	37943	Switch, [1000 / 2000] (Allison) (Manifold Pressure) **(*Replaces 33943)**	1	29542585
445	K77971	Repair Kit, (External Wire Harness) (7 & 4-Pin Neutral Safety Connector) (With Wires & Shrink Tubes)	1	88987185
446	37955	Wire Harness, [1000 / 2000] (Allison) (Internal) (6-Solenoids) 2000-03	1	29541371
446	37955R	Repair Kit, [1000 / 2000] (Allison) (Internal Wire Harness) (20-Pin Gray Connector)	1	Rostra
446	37955A	Wire Harness, [1000 / 2000] (Allison) (Internal) (7-Solenoids) 2004-05 (5-Speed)	1	29539792
446	37955B	Wire Harness, [1000 / 2000] (Allison) (Internal) (7-Solenoids) 2006-Up (6-Speed)	1	29543336

ALLISON 1000/2000/2400

494	37999S	Vented Dipstick, [1000 / 2000] (Allison) (Prevents Fluid From Going Out Vent) 2001-04	1	
495	37710T	Pick-Up Tube, [1000] (Allison)	1	
495	37712T	Adapter Tube, (Spin-on Filter to Bell Housing or Cooler Manifold) (1-1/14" Long) 2000-Up	1	29536298
		PUMP COMPONENTS		
507	37000-01K	Springs, [1000 / 2000] (Lube Regulator & Converter Relief Valve Springs) (2-Springs) 00-03	1	Sonnax
507	A1-LU-BST	Lock-Up Boost Valve Kit, [1000 / 2000] (Includes: Valve, Ball, Spring & End Plug) 2004-06	1	Transgo
507	37000-05K	Valve, [1000 / 2000] (Allison) (C1-Clutch Fill & Exhaust Rate Valve With Teflon Seal)	1	Sonnax
		HARD PARTS		
510	37202	Pump Body W/Gears, [1000 / 2000] (With 31 Inner Teeth on Pump Gear) 2000-05	1	29541145
510	37202A	Pump Body W/Gears, [1000 / 2000] (With 22 Inner Teeth on Pump Gear) 2006-Up	1	
520	37203	Stator, [1000 / 2000] (Allison) (Cast # 29536681) (1st Design) 2000-Up	1	
520	37203A	Stator, [1000 / 2000] (Allison) (Cast # 29542795) (2nd Design) 2000-Up	1	
530	K37201	Pump Gears, [1000 / 2000] (Allison) (.980" Thick) 2000-Up	1	
544	37204	Pump Plate, [1000 / 2000] (Allison) (1st Design)	1	29539583
544	37204A	Pump Plate, [1000 / 2000] (Allison) (2nd Design)	1	29539583
554	37898A	Drum, [1000 / 2000] (Allison) (C1 / C2-Clutch) (With 64 Teeth PTO Gear) 2000-Up	1	29542802
554	37898	Drum, [1000 / 2000] (Allison) (C1 / C2-Clutch) (Non PTO Type) 2000-Up	1	
570	37323	Hub, [1000 / 2000] (Allison) (C2-Clutch) (24 Teeth Outer) (3.325"Tall) (2.220"OD Nose) (1st Design) (.355" Washer Tab Holes)	1	29536962
570	37323A	Hub, [1000 / 2000] (Allison) (C2-Clutch) (24 Teeth Outer) (3.325"Tall) (2.260"OD Nose) (2nd Design) (.540" Washer Tab Holes)	1	
574	37322	Hub, [1000 / 2000] (Allison) (C1-Clutch) (Outer) (3.100" Tall) (1st Design) (Has Shoulder Where Bearing Rides)	1	
574	37322A	Hub, [1000 / 2000] (Allison) (C1-Clutch) (Outer) (3.100" Tall) (2nd Design) (No Shoulder Where Bearing Rides)	1	29539505
580	37821	Planet, [1000 / 2000] (Allison) (P1-Planet) (4 Gear) (No Groove) (*Uses a 61 Teeth Sun Gear #610) 2000-Up	1	29541704
582	37875	Planet, [1000 / 2000] (Allison) (P2-Planet) (4 Gear) (2-5/16" Long Neck) 2000-Up	1	29539510
584	37880	Planet, [1000 / 2000] (Allison) (P3-Planet) (4 Gear) (1-Groove) (With 22-Parking Lugs) (27 Teeth Pinions) 2000-Up	1	29540500
584	37880A	Planet, [1000 / 2000] (Allison) (P3-Planet) (4 Gear) (22-Parking Lugs) (29 Teeth Pinions) (Cast # 9503) 2000-Up	1	
584	37880B	Planet, [1000 / 2000] (Allison) (P3-Planet) (4 Gear) (22-Parking Lugs) (31 Teeth Pinions) (Cast # 1220 or 1226) 2000-Up	1	
590	37713	Ring Gear, [1000 / 2000] (P1-Planet) (111 Teeth) (117-Outer Clutch Splines) 2000-Up	1	29541008
592	37730	Ring Gear, [1000 / 2000] (P2-Planet) (111 Teeth) (117-Outer Clutch Splines) (2-Notches For #217 Washer) 2000-Up	1	29541707
594	37853	Ring Gear, [1000 / 2000] (Allison) (P3-Planet) (103 Teeth) (92-Outer Clutch Splines) 00-Up (*Fits 37880 Planet)	1	29539499
594	37853A	Ring Gear, [1000 / 2000] (Allison) (P3-Planet) (111 Teeth) (92-Outer Clutch Splines) 00-Up (*Fits 37880A Planet)	1	
594	37853B	Ring Gear, [1000 / 2000] (Allison) (P3-Planet) 2000-Up (*Fits 37880B Planet)	1	
610	37824	Sun Gear, [1000 / 2000] (P1-Planet) (Front) (61 Teeth) (26-Lugs) (1st Design) (Flat Where #220 Washer Rides)	1	
610	37824A	Sun Gear, [1000 / 2000] (P1-Planet) (Front) (61 Teeth) (26-Lugs) (2nd Design) (Recessed Where #220 Washer Rides) (3.150"OD)	1	
610	37824B	Sun Gear, [1000 / 2000] (P1-Planet) (Front) (61 Teeth) (26-Lugs) (3rd Design) (Recessed Where #220 Washer Rides) (3.250"OD)	1	29537433
612	37813	Sun Gear, [1000 / 2000] (Allison) (P2-Planet) (57 Teeth) (1st Design) (1.630 Thick)	1	
612	37813A	Sun Gear, [1000 / 2000] (Allison) (P2-Planet) (57 Teeth) (2nd Design) (1.495" Thick)	1	
614	37872	Sun Gear, [1000 / 2000] (Allison) (P3-Planet) (49 Teeth) (1.828" Thick) 2000-Up	1	29541701
614	37872A	Sun Gear, [1000 / 2000] (Allison) (P3-Planet) (53 Teeth) 2000-Up (*Fits 37880A Planet)	1	

619	37944	Spacer, [1000 / 2000] (Allison) (P2-Sun Gear to P3-Sun Gear) (1st Design) (.669" Thick)	1	
619	37944A	Spacer, [1000 / 2000] (Allison) (P2-Sun Gear to P3-Sun Gear) (2nd Design) (.826" Thick)	1	29541728
670	37801	Input Shaft, [1000 / 2000] (13-5/8" Long) (1st Design) (*Uses Bearing # 37451) (1.705"OD)	1	
670	37801A	Input Shaft, [1000 / 2000] (13-5/8" Long) (2nd Design) (*Uses Bearing #37451A) (2.120"OD)	1	29539506
674	37851	Mainshaft, [1000 / 2000] (Allison) (10-1/8" Long) (.790"OD) (Pilot on Both Ends) 2000-Up	1	29536984
678	37867	Output Shaft, [1000 / 2000] (Allison) (2WD) (7-5/16" Long) (*Uses a Slide-on Type Yoke) 2000-Up	1	
678	37867A	Output Shaft, [1000 / 2000] (Allison) (2WD) (*Uses a Bolt-on Type Yoke) 2000-Up	1	
678	37867B	Output Shaft, [1000 / 2000] (Allison) (4x4) (6-5/8" Long) (Threaded on the Outside Diameter)	1	
		VALVE BODIES (REBUILT)		
740	GM-4650	Valve Body, [1000 / 2000] (Allison) (6-Solenoids) 2000-E2004	1	
740	GM-4651	Valve Body, [1000 / 2000] (Allison) (7-Solenoids) L2004-05	1	
		VALVE BODIES		
740	37994	Valve Body, [1000 / 2000] (Allison) (6-Solenoids) 2000-E2004	1	
740	37994A	Valve Body, [1000 / 2000] (Allison) (7-Solenoids) L2004-05	1	
740	37994B	Valve Body, [1000 / 2000] (Allison) 2006-Up (6-Speed)	1	
		VALVE BODY COMPONENTS		
741	37683	Manual Valve, [1000 / 2000] (Allison) 2000-Up	1	
741	37000-03	End Sleeve, [1000 / 2000] (Allison) (F-Trim Valve)	1	Sonnax
741	37000-02	Spring, [1000 / 2000] (Allison) (E-Shift Valve)	1	Sonnax
	37000-02BST	Bore Sizing Tool, [1000 / 2000] (Allison) (*For 37000-02)	1	Sonnax
		HARD PARTS (Continued)		
750	37912	Bell Housing, [1000 / 2000] (Round Bell 6-1/2" Thick) (12-Bolt Cooler Manifold & 2 / 4-Bolt Mount Bosses)	1	
750	37912A	Bell Housing, [1000 / 2000] (Round Bell 6-1/2" Thick) (12-Bolt Cooler Manifold & No 4-Bolt Mount Bosses)	1	
750	37912B	Bell Housing, [1000 / 2000] (Round Bell 6-1/2" Thick) (No 12-Bolt Cooler Manifold) (Cast # 29536610)	1	
750	37912C	Bell Housing, [1000 / 2000] (Chevy Bell 8-3/4" Thick) (No 12-Bolt Cooler Manifold) (Cast # 29537591)	1	29540491
757	37702	PTO Cover, [1000 / 2000] (Allison) (6-Bolt) 2000-Up	2	6774322
760	37913	Case, [1000 / 2000] (Allison) (With PTO) 2000-Up	1	29536606
764	37205	Spacer Plate, [1000 /2000] (Allison) (Bell Housing to Case) (1st Design) 2000-Up	1	29541148
764	37205A	Spacer Plate, [1000 / 2000] (Allison) (Bell Housing to Case) (2nd Design)	1	
765	37701	Pan, [1000 / 2000] (Allison) (Bottom) (Shallow With Drain Plug) 2000-Up	1	29536524
770	37915C	Extension Housing, [1000 / 2000] (Allison) (2WD) (6-3/8" Long) (With 4-Bolt Flange) 00-Up	1	
770	37915	Extension Housing, [1000 / 2000] (Allison) (2WD) (5-3/8" Long) (Slip-In Yoke) 2000-Up	1	
770	37915A	Extension Housing, [1000 / 2000] (Allison) (4x4) (1st Design) (Aluminum) 2000-9/23/04	1	
770	37915B	Extension Housing, [1000 / 2000] (Allison) (4x4) (2nd Design) (Aluminum) 9/24/2004-Up	1	29542109
798	37841B	Bolt, [1000 / 2000] (Allison) (2WD) (Yoke to Output Shaft) 2000-Up	1	29536847
798	37841A	Nut, [1000 / 2000] (Output Shaft) (4x4) (With 4-Notches on the Outside Diameter) 2000-Up	1	29531231
799	37841	Nut, [1000 / 2000] (Allison) (Output Shaft) (2WD) (Bolt-on Type)	1	
841	37799	Yoke, [1000 / 2000] (Allison) (Output Shaft) (2WD) 2000-Up	1	15004046
845	37990	Reluctor, [1000 / 2000] (Allison) (2WD) (Output) (40 Teeth) (1.980" Thick) 2000-Up	1	29536591
845	37990A	Spacer, [1000 / 2000] (Allison) (4x4) 2000-Up	1	29541013
	K37928	Kit, Snap Ring, [1000 / 2000 / 2400] 1999-Up	1	
926	37704	Spring, [1000 / 2000] (Allison) (Accumulator) 2000-Up	1-2	
927	37998	Piston, [1000 / 2000] (Allison) (Accumulator) 2000-Up	1-2	

ALLISON 1000/2000/2400

929	37813	Cover, [1000 / 2000] (Allison) (Accumulator) 2000-Up	1	
960	37806	Piston, [1000 / 2000] (Allison) (C2-Clutch) (Aluminum) (Cast # 29536100) (2.850" Thick) 2000-03	1	29542807
960	37856	Balance Piston, [1000 / 2000] (Allison) (C2-Clutch) (Bonded) 2000-Up (.550" Thick) (7-7/8"OD)	1	29536105
962	37857	Piston, [1000 / 2000] (C3 & C4-Clutch) (Bonded) (.840" Thick) (8-3/4"OD) (7-3/16"ID) 00-Up	2	29543321
963	37807	Piston Housing, [1000 / 2000] (Allison) (C1-Clutch) (6-3/8"OD) 2000-Up (Cast # 29536106 or 29537992)	1	29542811
964	37808	Piston, [1000 / 2000] (Allison) (C1-Clutch) (Aluminum) (Cast # 29536109) (5.925"OD) 00-Up	1	29543239
964	37855	Balance Piston, [1000 / 2000] (Allison) (C1-Clutch) (Bonded) (.410" Thick) (6.035"OD) 2000-Up	1	29537993
966	37809	Piston, [1000 / 2000] (Allison) (C5-Clutch) (Aluminum) (2.165" Thick) (10"OD) (4.550"ID) 2000-Up	1	29536211
970	37977	Springs W/Retainer, [1000 / 2000] (C2-Clutch Return) (32-Springs) (5.775"OD) (2-Notches) 2000-Up	1	29542810
972	37981	Springs W/Retain, [1000 / 2000] (C3 & C4-Clutch Return) (1st Design) (*Used With 11-Slot Steel) (3-Sets of 3-Springs)	2	29542191
972	37981A	Springs W/Retain, [1000 / 2000] (C3 & C4-Clutch Return) (2nd Design) (*Used With 14-Slot Steel) (3-Sets of 3-Springs)	2	
974	37978	Springs W/Retainer, [1000 / 2000] (Allison) (C1-Clutch Return) (28-Springs) (4.322"OD) 2000-Up	1	29542814
976	37980	Springs W/Retainer, [1000 / 2000] (Allison) (C5-Clutch Return) (18-Springs) (9-3/4"OD) (1-Tab) 2000-Up	1	29531134
991	K37676	Linkage Assembly, [1000 / 2000] (Internal) (1st Design) (Gold Color Manual Shaft With Hollow Roll Pin) (7-Pieces)	1	
991	37675	Manual Shaft, [1000 / 2000] (Allison) (1st Design) (Gold Color)	1	
991	37617	Roll Pin, [1000 / 2000] (Allison) (Linkage) (1st Design) (Hollow)	1	
991	K37676A	Linkage Assembly, [1000 / 2000] (Internal) (2nd Design) (Black Manual Shaft With Solid Roll Pin) (7-Pieces)	1	
991	37675A	Manual Shaft, [1000 / 2000] (Allison) (2nd Design) (Black)	1	
991	37617A	Roll Pin, [1000 / 2000] (Allison) (Linkage) (2nd Design) (Solid)	1	
995	K37678	Park Pawl Assembly, [1000 / 2000] (Allison) (.709"OD Pin) (3-Pieces)	1	
996	37280	Fitting, [1000 / 2000] (Allison) (Cooler Line) (Push-In) (5/8" Line) 2000-03	2	
996	37280A	Fitting, [1000 / 2000] (Allison) (Cooler Line) (Push-in) (3/4" Line) 2003-Up	2	
999	37679	Oil Tube, [1000 / 2000] (Allison) (Valve Body) (7-7/8" Long)	1	

The Customers Who Buy Our Electronic Transmission Parts Think of Us as The

Import Parts Specialists.

Rostra Performance Class

SOLENOIDS



Solenoids, Sensors, Modulators, Harnesses, and more
for Honda, Toyota, Mazda, Volkswagen, Aisin Warner and more.

Rostra

Bringing OE parts to the aftermarket

Made in the USA

ALLISON AT540/543/545

RWD 4 Speed

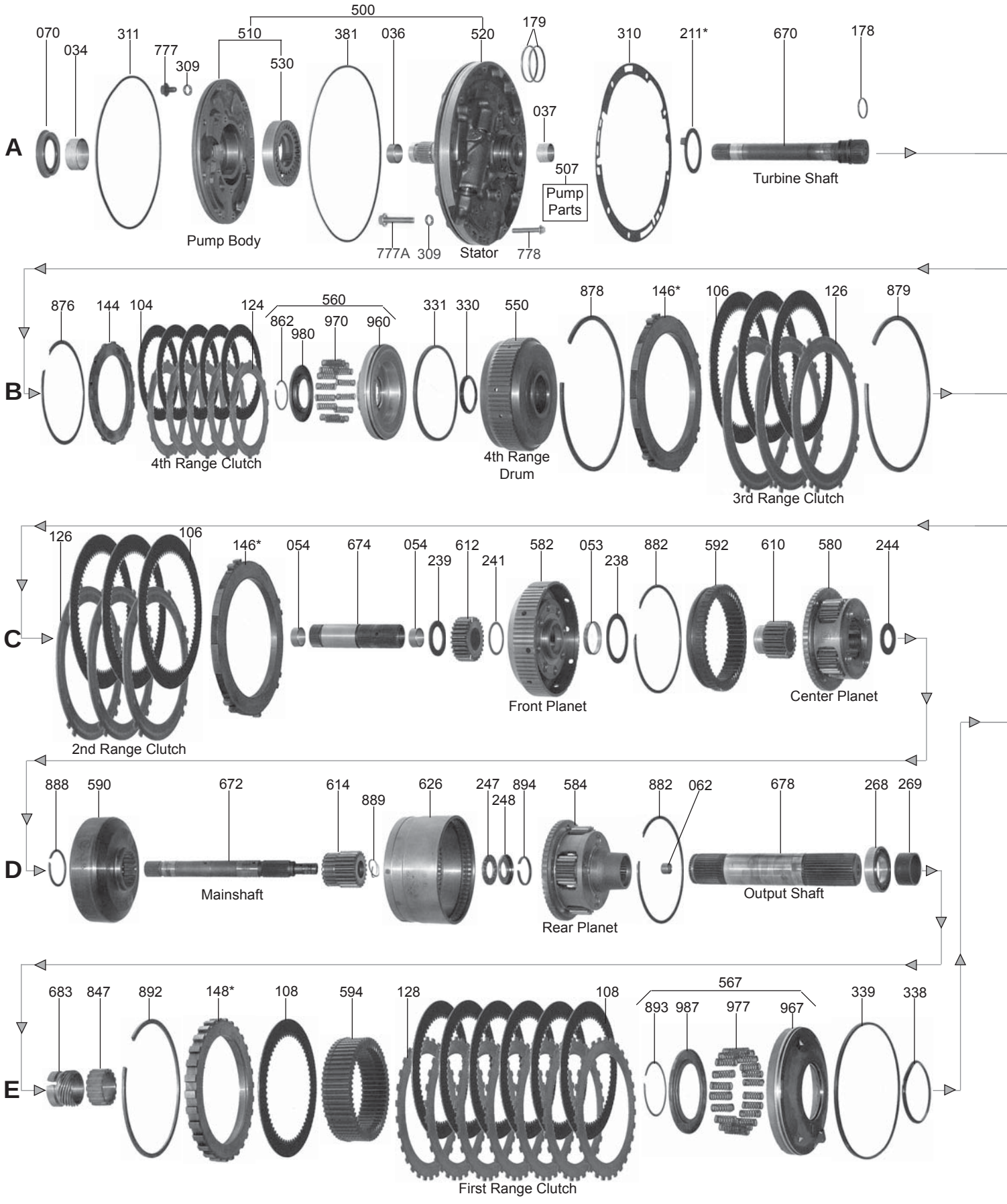

ALLISON AT540/543/545

RWD 4 Speed

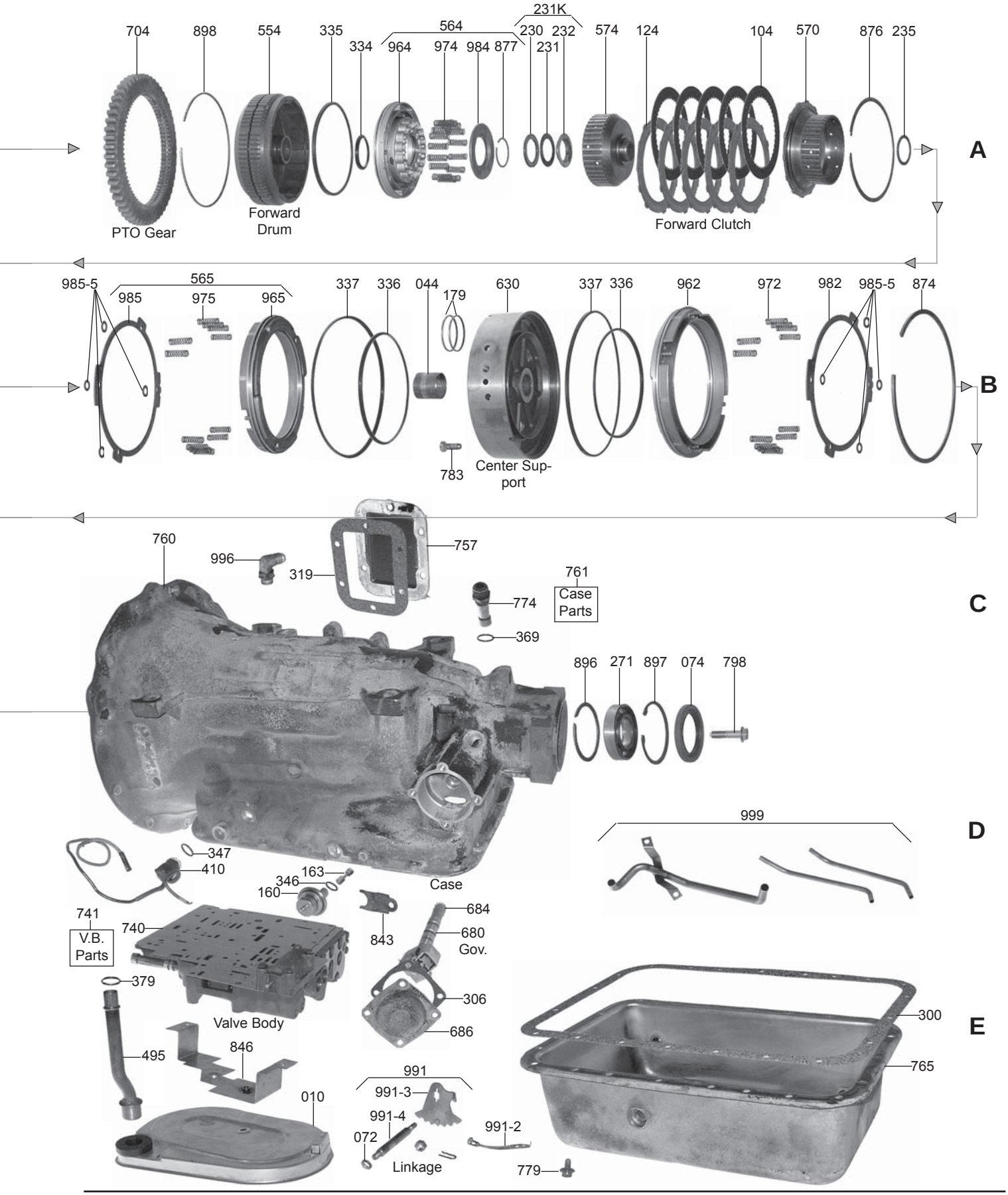

ALLISON AT540/543/545

ILL#	PART#	DESCRIPTION		REF #
		OVERHAUL KITS		
	K11900	Overhaul Kit, [AT540 / AT545]	1	
	K11900A	Overhaul Kit, [AT543]	1	
		MASTER L/STEEL KIT		
	DK1100-S	Master L/Steels Kit, [AT540 / AT545]	1	
	DK1100A-S	Master L/Steels Kit, [AT543]	1	
		MASTER W/STEEL KIT		
	DK1100	Master W/Steels Kit, [AT540 / AT545]	1	
	DK1100A	Master W/Steels Kit, [AT543]	1	
		FILTER		
010	21800A	Filter, [AT545] (Treated Paper) (Deep Filter)	1	6883044
010	34661C	Filter, [AT540] (Flat, Brass Screen) (400 Type Filter)	1	
010	11800	Filter, [AT540] (Flat, Stainless Steel Screen)	1	
		FILTER KIT		
	FK11800	Filter Kit, [AT540] (Flat, Stainless Steel Screen)	1	
	FK21800A	Filter Kit, [AT545] (Treated Paper) (Deep Filter)	1	
		BUSHINGS		
	K11903	Bushing Kit, [AT540 / Early AT545] (7-Bushing) 1970-Up	1	
	K11903A	Bushing Kit, [AT545 / Late] (7-Bushing)	1	
034	8005	Bushing, [AT540 / AT545] (Front Pump Body Babbit)	1	29511860
036	34002	Bushing, [AT540 / AT545] (Stator) (Front)	1	
037	34002	Bushing, [AT540 / Some] (Stator) (Rear) (*Also fits [AT540 / AT545] Stator Front, & Sun Gear Front & Rear)	1-4	8623944
037	11423	Caged Needle Bearing, [AT540 / AT545] (Stator) (Rear)	1	
044	11003	Bushing, [AT540 / AT545] (Center Support) (1.54” OD)	1	
044	11003A	Bushing, [AT540 / AT545] (Center Support) (1.60” OD)	1	
053	11005	Bushing, [AT540 / AT545] (Front Planet)	1	
054	34002	Bushing, [AT540 / AT545] (Sun Gear) (Front & Rear)	2	
062	11002	Bushing, [AT540 / AT545] (Output Shaft Pilot) (.775” OD)	1	
062	11002A	Bushing, [AT540 / AT545] (Output Shaft Pilot) (.815” OD)	1	
		METAL CLAD SEALS		
070	35151A	Seal, [AT540 / AT545] (Front Pump)	1	8641826
072	38511	Seal, [AT540 / AT545] (Linkage Shaft)	1	8623056
074	11850	Seal, [AT540 / AT545] (Rear Case) (Extension Housing) (3.630”OD) (2.500”ID)	1	6778050
074	11850A	Seal, [AT545] (Rear Case) (Extension Housing) (*Fits Late Applicants)	1	
		FRICTION CLUTCH		
104	11103	Friction, [AT540 / AT545] (4th & Forward Clutch) (.080”) (42 Teeth) (5.89”OD)	10	23042197
106	11104	Friction, [AT540 / AT545] (2nd & 3rd Clutch) (.100”) (80 Teeth) (9.10”OD)	6	29537887
108	11106	Friction, [AT540 / AT545] (1st Range Clutch) (.097”) (60 Teeth) (8.15”OD)	7	23042198
	K11100	Friction Module, [AT540 / A543 / A545]	1	
		STEEL CLUTCH		
124	34305C	Steel, [AT540 / AT545] (4th & Forward Clutch) (.090”) (14 Teeth)	5-10	8625197

126	11105	Steel, [AT540 / AT545] (2nd & 3rd Clutch) (.098") (9 Teeth) (7.25"ID)	6	29515399
128	11107	Steel, [AT540 / AT545] (1st Range Clutch) (.098") (30 Teeth) (6.50"ID)	7	6831705
	K11110	Steel Module, [AT540 / A543 / A545]	1	
		CLUTCH PRESSURE PLATES		
144	34421	Pressure Plate, [AT540 / AT545] (4th Range Clutch)	1	
146	11718	Pressure Plate, [AT540 / AT545] (2nd & 3rd Range Clutch) (Selective)	2	
148	11719	Pressure Plate, [AT540 / AT545] (1st Range Clutch) (Selective)	1	
		MODULATORS		
160	11820	Modulator, [AT540 / AT545] (Allison) (White) (Adjustable)	1	29501199
		OIL SEALING RINGS		
	K11901	Ring Kit, [AT540 / AT545] (5-Rings)	1	
178	4202	Ring, [AT540 / AT545] (Turbine Shaft)	1	8616052
179	14306	Ring, [AT540 / AT545] (Stator to Forward Drum & Center Support) 1970-Up	4	23046598
		WASHERS & BEARINGS		
	K11907	Washer Kit, [AT540 / AT545] (5-Pieces) 1988-Up	1	
	K11907A	Washer Kit, [AT540 / AT545] (13-Pieces) 1988-Up	1	
211	11400	Washer, [AT540 / AT545] (Stator to Forward Drum) (# 0) (.056"-.060")	1	6831620
211	11401	Washer, [AT540 / AT545] (Stator to Forward Drum) (# 1) (.072"-.076")	1	6831621
211	11402	Washer, [AT540 / AT545] (Stator to Forward Drum) (# 2) (.089"-.093")	1	6831622
211	11403	Washer, [AT540 / AT545] (Stator to Forward Drum) (# 3) (.105"-.109")	1	6831623
211	11404	Washer, [AT540 / AT545] (Stator to Forward Drum) (# 4) (.121"-.125")	1	6831624
211	11405	Washer, [AT540 / AT545] (Stator to Forward Drum) (# 5) (.138"-.142")	1	6831625
231	11407	Bearing Set, [AT540 / AT545] (Forward Drum to Forward Clutch Hub) (Bearing & 2-Races)	1	9414211
235	34301	Washer, [AT540 / AT545] (Forward Clutch Hub to 4th Range Drum) (Brass)	1	8624781
238	11418	Washer, [AT540 / AT545] (Front Planet to Center Planet) (Fiber) (3.085"OD)	1	6831673
239	11409	Washer, [AT540 / AT545] (Front Sun Gear to Center Support) (Fiber) (2.135"OD)	1	29506146
241	11412	Washer, [AT540 / AT545] (Front Sun Gear to Front Planet) (Brass)	1	23013451
244	11419	Washer, [AT540 / AT545] (Center Planet to Center Ring Gear) (.062")	1	29506147
247	11420	Bearing, [AT540 / AT545] (Rear Sun Gear to Rear Planet) (1.766"OD)	1	
248	11431	Race, [AT540 / AT545] (Rear Sun Gear to Rear Planet) (1.809"OD)	1	
268	11006	Ball Bearing, [AT540 / AT545] (Output Shaft to Case) (Front) (2.953"OD) (3L09)	1	
269	11432	Spacer, [AT540 / AT545] (Output Shaft Bearing (Front) to Governor Drive Gear) (1.924" Thick)	1	
271	11007	Ball Bearing, [AT540 / AT545] (Output Shaft to Case) (Rear) (3.350"OD) (NDH 3209)	1	23047970
		GASKETS & RUBBER COMPONENTS		
300	11315	Gasket, [AT540 / AT545] (Bottom Pan) **(*Also Fits MT600 Series)**	1	29501160
300	11315D	Gasket, [AT540 / AT545] (Bottom Pan) **(*Also Fits MT600 Series)** (Duraprene)	1	
305	13271	Gasket, [AT540 / AT543 / AT545] (Extension Housing)	1	8624709
306	3914	Gasket, [AT540 / AT545] (Governor Cover)	1	8623263
309	13268A	Gasket, [AT540 / AT545] (Stator Bolt Washer)	6	8626281
310	11303	Gasket, [AT540 / AT545] (Pump to Case)	1	23015883
311	3877V	O-Ring, [AT540 / AT545] (Pump Body)	1	8626309
319	11323	Gasket, [AT540 / AT545] (PTO Cover)	1	29501161
330	3284	Lip Seal, [AT540] (4th Range Clutch) (Inner)	1	8623121
335	3643	Lip Seal, [AT540 / AT545] (Forward & Direct Clutch) (Outer)	1	8623101
334	3956	Lip Seal, [AT540 / AT545] (Forward & Direct Clutch) (Inner)	1	8623102
346	3410	O-Ring, [AT540 / AT545] (Modulator) (*Also Fits Speed-O Housing & Neutral Safety Switch)	1-3	10054241

ALLISON AT540/543/545

379	3547	O-Ring, [AT540 / AT545] (Filter Intake Tube)	1	1363951
381	11200A	O-Ring, [AT540 / AT545] (Pump Stator) (Lathe Cut)	1	
		TECHNICAL MANUALS		
	TMAT540	Technical Manual, [AT540 / AT545]	1	
		ELECTRICAL COMPONENTS		
410	11947	Switch, [AT540 / AT545] (Neutral Safety)	1	
	11610	Switch, [AT540 / AT545] (Pressure) (on Passenger Side of Case)	1	
		HARD PARTS		
500	11912	Pump Assembly, [AT540] 1970-Up	1	
500	11912A	Pump Assembly, [AT545]	1	
510	11914	Pump Body W/Gears, [AT540] (Cast # 895)	1	8679988
510	11914A	Pump Body W/Gears, [AT545] (Cast # 919 & 336) (6-Bolts to Case)	1	29537354
510	11914B	Pump Body W/Gears, [AT545] (Cast # 919) (7-Bolts to Case)	1	
520	11913	Stator, [AT540] (Uses Pump Body Cast # 895)	1	23014020
520	11913A	Stator, [AT545] (Uses Pump Body Cast # 919) (6-Bolts to Case)	1	29509636
520	11913B	Stator, [AT545] (Uses Pump Body Cast # 919) (7-Bolts to Case)	1	
530	K35201B	Pump Gear Set, [AT540 / AT545] (.727" Thick)	1	
550	11858	Drum, [AT540 / AT545] (4th Range Clutch) (5 Clutch) (No Snap Ring Groove on OD) (1.350"OD Front Splines on #674) (*Also Fits [AT540 / AT545] Forward Drum Without PTO)	1-2	29506156
550	11858A	Drum, [AT540 / AT545] (4th Range Clutch) (5 Clutch) (No Snap Ring Groove on OD) (1.398"OD Front Splines on #674) (*Also Fits [AT540 / AT545] Forward Drum Without PTO)	1-2	
554	11833	Drum, [AT540 / AT545] (Forward Drum) (No Snap Ring Groove on the OD)	1	
554	11833A	Drum, [AT540 / AT545] (Forward Clutch) (5 Clutch) (With Snap Ring Groove on Overdrive For PTO Gear)	1	29506185
570	11857	Hub, [AT540 / AT545] (4th Range Clutch)	1	
574	11856	Clutch Hub, [AT540 / AT545] (Forward Clutch)	1	29506145
580	11853	Planet, [AT540 / AT545] (Center Planet) (4 Gear) (Straight Teeth)	1	6831676
582	11852	Planet, [AT540 / AT545] (Front Planet) (4 Gear) (Straight Teeth)	1	23046074
584	11854	Planet, [AT540] (Rear) (4 Gear) (No Groove)	1	6837719
584	11854A	Planet, [AT545] (Rear) (4 Gear) (1-Groove)	1	
590	11703	Ring Gear, [AT540 / AT545] (Center Planet) (54 Teeth)	1	
592	11705	Ring Gear, [AT540 / AT545] (Front Planet) (54 Teeth)	1	
594	11704	Ring Gear, [AT540 / AT545] (Rear Planet) (Straight Teeth)	1	
610	11835	Sun Gear, [AT540 / AT545] (Center) (22 Teeth) (1.963" Long)	1	29506150
612	11837	Sun Gear, [AT540] (Front Planet) (26 Teeth) (No Groove)	1	6835732
612	11837A	Sun Gear, [AT545] (Front Planet) (26 Teeth) (1-Groove)	1	29506151
614	11839	Sun Gear, [AT540 / AT545] (Rear) (22 Teeth) (2.142" Long) (Straight Teeth)	1	29506149
626	11706	Connecting Drum, [AT540 / AT545] (Center Planet to Rear Planet)	1	
630	11859	Center Support, [AT540 / AT545] (Aluminum) (1.404"ID of Bushing)	1	
630	11859A	Center Support, [AT540 / AT545] (Aluminum) (1.378"ID of Bushing)	1	
630	11859B	Center Support, [AT540 / AT545] (Aluminum) (1.460"ID of Bushing)	1	29525518
670	11832	Shaft, [AT540 /AT545] (Input) (9-1/4" Long) (1-Ring)	1	29525516
672	11851	Shaft, [AT540 / AT545] (Main) (10-5/8" Long)	1	29524363
674	11831	Shaft, [AT540 / AT545] (Sun Gear) (5.475" Long) (1.402"OD Bushing Land) (1.350"OD Front Splines)	1	29506158
674	11831A	Shaft, [AT540 / AT545] (Sun Gear) (5.475" Long) (1.402"OD Bushing Land) (1.398"OD Front Splines)	1	
678	11987	Shaft, [AT540 / AT545] (Output Shaft) (9-1/2" Long) (Bolt-on Yoke Type)	1	

680	11815	Governor Assembly, [AT540 / AT545] (ID # 460)	1	6881466
680	11817	Governor Assembly, [AT540 / AT545] (ID # 461)	1	6885570
680	11816	Governor Assembly, [AT540 / AT545] (ID # 462)	1	6885571
684	K11411	Gear, [AT540 / AT545] (Governor) (Drive) (12 Teeth) (1-Notch) (Steel)	1	29503064
684	K34411A	Gear, [AT540 / AT545] (Left Angled) (With 1-Pin & 2-Nails)	1	
686	11440	Cover, [AT540 / AT545] (Governor)	1	
		VALVE BODIES		
740	11754	Valve Body, [AT540 / AT545]	1	
760	11701	Case, [AT540] (With PTO Cover) (Cast # 6839580)	1	
760	11701A	Case, [AT545] (With PTO Cover) (Cast # 1950074)	1	
765	11801	Pan, [AT540] (Bottom) (With 1-Screw In Dipstick Hole)	1	
765	11801A	Pan, [AT545] (Bottom) (With 2-Screw In Dipstick Holes)	1	
847	11227	Gear, [AT540] (Speed-O Drive) (5 Teeth) (Steel)	1	
847	11990	Reluctor, [AT545] (Speed-O Drive) (16 Teeth)	1	29513278
	K11928	Kit, Snap Ring, [AT540 Series]	1	
862	11601	Snap Ring, [AT540] (4th Range Piston Retainer)	1	8623105
862	11602	Snap Ring, [AT545] (4th Range piston Retainer)	1	8684730
874	11603	Snap Ring, [AT540 / AT545] (Holds 2nd Range Retainer In Case)	1	
876	11604	Snap Ring, [AT540 / AT545] (Forward & 4th Range Clutch)	2	
877	11601	Snap Ring, [AT540] (Forward Piston Retainer) (*Also Fits [AT540] 4th Range Piston Retainer)	1-2	8623105
877	11602	Snap Ring, [AT545] (Forward Piston Retainer) (*Also Fits [AT545] 4th Range Piston Retainer)	1-2	8684730
878	11605	Snap Ring, [AT540 / AT545] (Holds 3rd Range Clutch Pressure Plate in) (*Also Fits [AT540 /AT545] Center Support) (Both Sides)	1-3	
879	11603	Snap Ring, [AT540 / AT545] (Holds 3rd Range Retainer in Case)	1	
882	11606	Snap Ring, [AT540 / AT545] (Holds Front Ring Gear to Center Planet & Holds Rear Planet to Connecting Drum)	2	
888	11607	Snap Ring, [AT540 / AT545] (Holds Rear Sun Gear to Center Ring Gear)	1	
889	11608	Snap Ring, [AT540 / AT545] (Holds Rear Sun Gear to Main Shaft) (Spiral)	1	
892	11609	Snap Ring, [AT540 / AT545] (Holds 1st Range Clutch Pressure Plate in Case)	1	
893	11610	Snap Ring, [AT540 / AT545] (Holds 1st Range Piston Retainer in Case)	1	
894	11611	Snap Ring, [AT540 / AT545] (Holds Rear Planet to Output Shaft)	1	
896	11612	Snap Ring, [AT540 / AT545] (Stop for Rear Case Bearing) (Stays In Case)	1	6831704
897	11613	Snap Ring, [AT540 / AT545] (Holds Rear Output Bearing In Case)	1	9418788
898	11614	Snap Ring, [AT540 / AT545] (Holds PTO Gear to Forward Drum)	1	6831639
960	11806	Piston, [AT540] (4th Range Drum) (.680” Thick)	1	
960	11806A	Piston, [AT545] (4th Range Drum) (.730” Thick)	1	
962	11807	Piston, [AT540 / AT545] (2nd Range Clutch)	1	
964	11806	Piston, [AT540] (Forward Clutch) (4-Ears) (Cast # 68316321) (*Also [AT540] 4th Range Clutch)	1-2	
964	11806A	Piston, [AT545] (Forward Clutch) (No Ears) (Cast # 29505882) (*Also [AT545] 4th Range Clutch)	1-2	
964	11806B	Piston, [AT545] (Forward Clutch) (No Ears) (Cast # 6884280) (*Also [AT545] 4th Range Clutch)	1-2	
965	11807	Piston, [AT540 / AT545] (3rd Range Clutch) (Aluminum) (Cast # 6834817) (*Also [AT540 / AT545] 2nd Range Clutch)	1-2	6834817
967	11808	Piston, [AT540 / AT545] (1st Range Clutch) (Cast # 6834816)	1	
970	11940	Springs, [AT540 / AT545] (4th Range Clutch Return)	16	
972	11941	Springs, [AT540 / AT545] (2nd Range Clutch Return)	12	
974	11940	Springs, [AT540 / AT545] (Forward Clutch Return) (*Also Fits 4th Range Clutch)	16-32	8624101

ALLISON AT540/543/545

975	K11941	Spring Set, [AT540 / AT545] (3rd Range & 2nd Clutch Return) (12-Pieces)	12-24	
977	K11942	Spring Set, [AT540 / AT545] (1st Range Clutch Return) (22-Pieces)	22	
980	11930	Retainer, [AT540 / AT545] (4th Range Clutch Spring)	1	
982	11931	Retainer, [AT540 / AT545] (2nd Range Clutch Spring)	1	
984	11930	Retainer, [AT540 / AT545] (Forward Clutch Spring) (*Also Fits 4th Range Clutch Spring Retainer)	1-2	8623104
985	11931	Retainer, [AT540 / AT545] (3rd Range & 2nd Clutch Clutch Spring)	1-2	
985-5	K11600	Lock Ring Set, [AT540 / AT545] (3rd Range & 2nd Range Spring Retainer) (4-Pieces)	4-8	
987	11932	Retainer, [AT540 / AT545] (1st Clutch Spring)	1	
991	K11676	Linkage Assembly, [AT540 / AT545] (Internal)	1	
996	11280	Cooler Fitting, [AT540 / AT545] (Elbow, Screw-In)	2	
999	K11679	Tube Set, [AT540]	1	
999	K11679A	Tube Set, [AT545]	1	

NOTES

MX17 (SPRINT/SUZUKI)

FWD 3 Speed

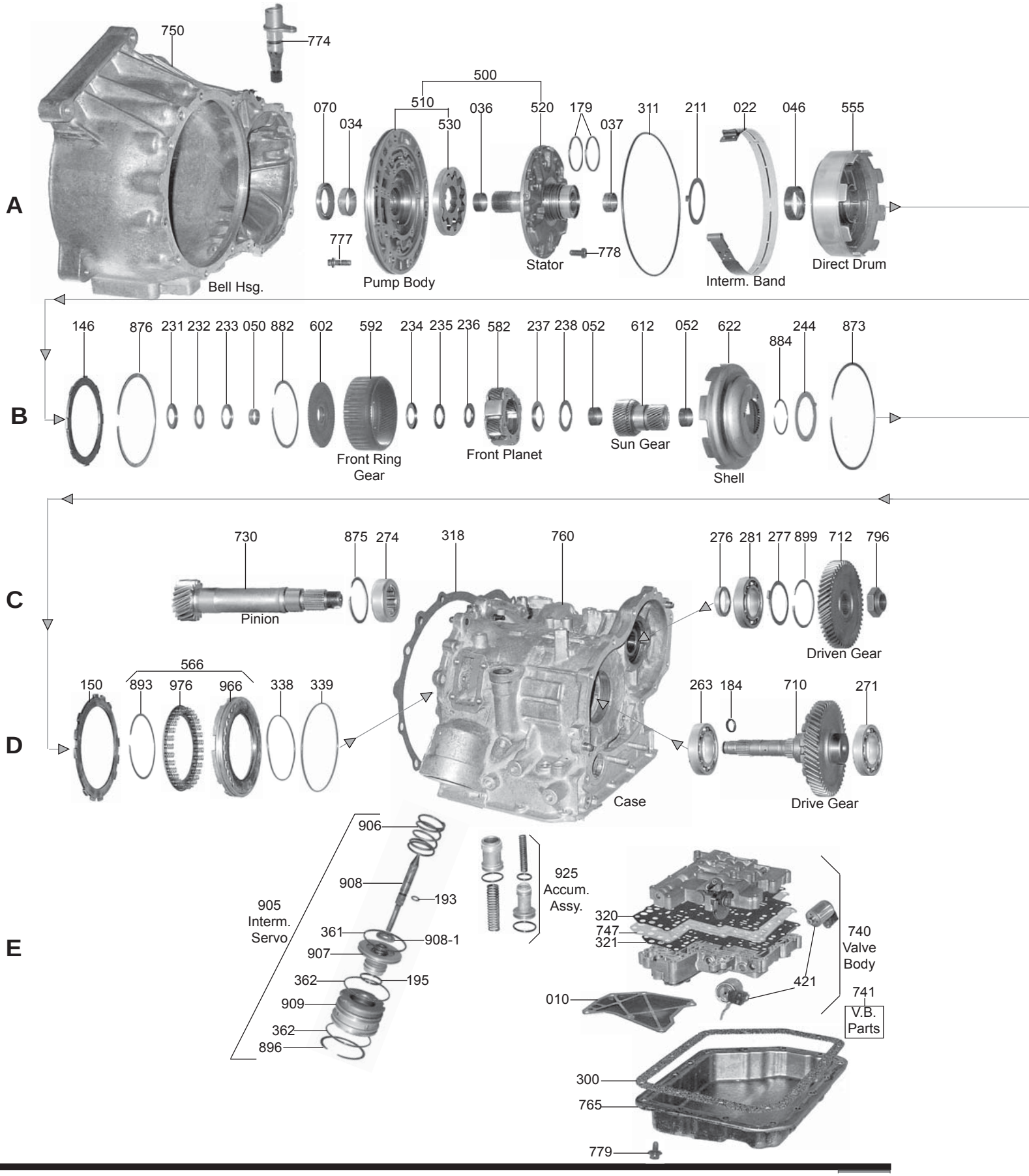

MX17 (SPRINT/SUZUKI)

FWD 3 Speed

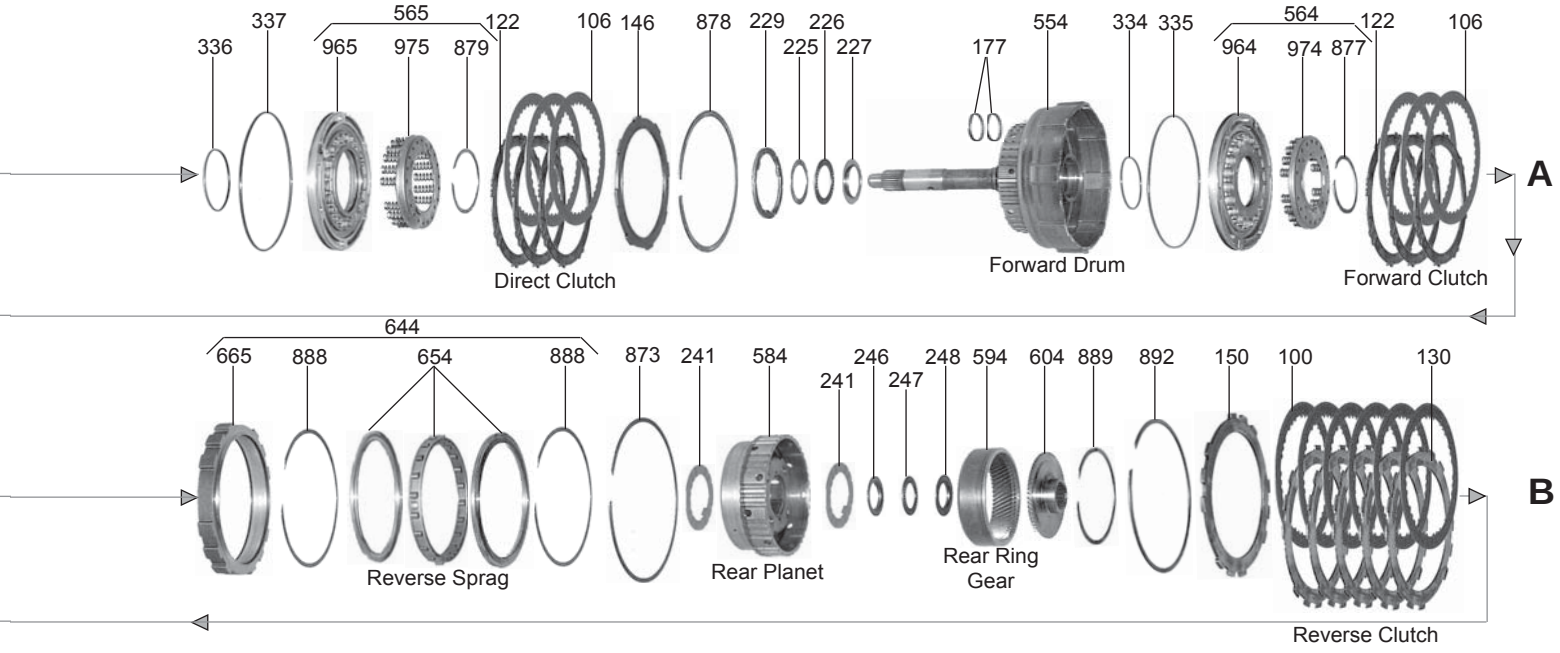

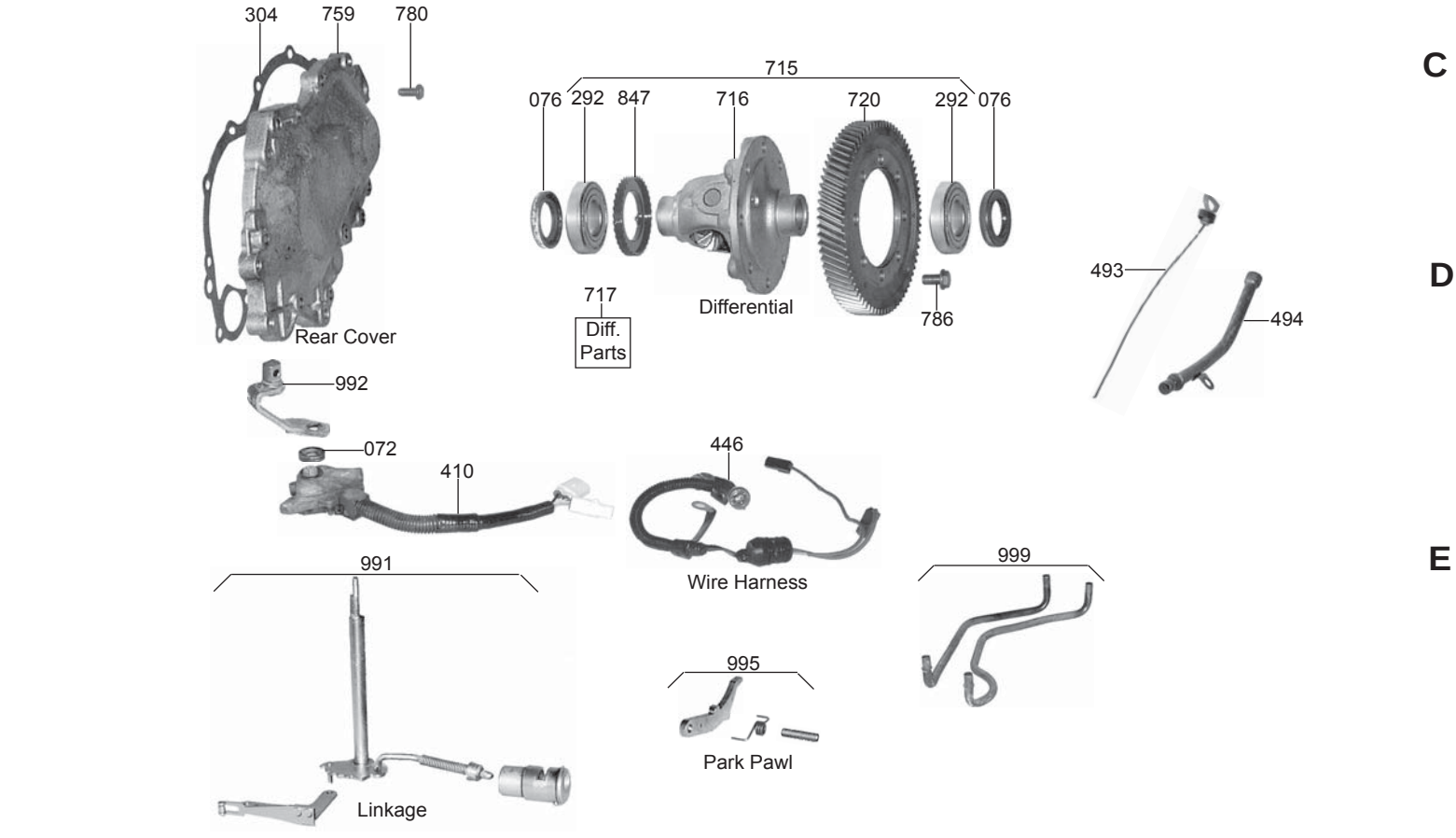

MX17 (SPRINT/SUZUKI)

ILL#	PART#	DESCRIPTION		REF #
		OVERHAUL KITS		
	K89900M	Overhaul Kit, [MX17] (Sprint, Suzuki) 1985-Up	1	
		MASTER L/STEEL KIT		
	DK8900M-S	Master L/Steels Kit, [MX17] (Sprint, Suzuki) 1985-Up	1	
		MASTER W/STEEL KIT		
	DK8900M	Master W/Steels Kit, [MX17] (Sprint, Suzuki) 1985-Up	1	
		FILTER		
010	89710B	Filter, [MX17] (*Except Daihatsu) 1985-Up	1	
010	89710D	Filter, [MX17] (Daihatsu) 1989-Up	1	
		FILTER KIT		
	FK89710B	Filter Kit, [MX17] (Sprint, Suzuki) 1985-Up	1	
		BANDS		
022	89700B	Band, [MX17] (Sprint, Suzuki) (1-1/4" Wide) 1985-Up	1	
		BUSHINGS		
	K89000M	Bushing Kit, [MX17] (Sprint, Suzuki) 1985-Up	1	
034	67001	Bushing, [MX17] (Pump Body) 1985-Up	1	
036	67002A	Bushing, [MX17] (Stator) (Front) 1985-Up	1	
037	89003	Bushing, [MX17] (Stator) (Rear) 1985-Up	1	
045	89008	Bushing, [MX17] (Direct Drum) 1985-86	1	
046	89008A	Bushing, [MX17] (Direct Drum) 1987-Up	1	
050	89006	Bushing, [MX17] (Input Hub) 1985-Up	1	
052	89010	Bushing, [MX17] (Sun Gear) 1985-Up	2	
		METAL CLAD SEALS		
070	67550	Seal, [MX17] (Pump) 1985-Up	1	90311-38020
072	78197	Seal, [MX17] (Linkage) 1985-Up	1	
076	89155	Seal, [MX17] (Axle) (2.145"OD) 1985-Up	2	96054226
		FRICTION CLUTCH		
100	89100	Friction, [MX17] (Reverse Clutch) (.067") (33 Teeth) (5.60"OD) 1985-Up	4	35677-32040
106	89103	Friction, [MX17] (Forward & Direct Clutch) (.067") (40 Teeth) (5.00"OD) 1985-Up	3-6	35633-32050
		STEEL CLUTCH		
122	89102	Steel, [MX17] (Forward & Direct Clutch) (.071") (8 Teeth) (4.10"ID) 1985-Up	3-6	
130	89106	Steel, [MX17] (Reverse Clutch) (.071") (12 Teeth) (4.60"ID) 1985-Up	4	
		CLUTCH PRESSURE PLATES		
146	89716A	Pressure Plate, [MX17] (Forward & Direct Clutch) (3.37mm) (8 Teeth) 1985-Up	1-2	
146	89716	Pressure Plate, [MX17] (Forward & Direct Clutch) (3.00mm) (8 Teeth) 1985-Up	1-2	
146	89716B	Pressure Plate, [MX17] (Forward & Direct Clutch) (2.80mm) (8 Teeth) 1985-Up	1-2	
146	89716C	Pressure Plate, [MX17] (Forward & Direct Clutch) (2.50mm) (8 Teeth) 1985-Up	1-2	
150	89714	Pressure Plate, [MX17] (Reverse Clutch) 1985-Up	1	
		OIL SEALING RINGS		
	K89901F	Ring Kit, [MX17] (Sprint, Suzuki) 1985-Up	1	

MX17 (SPRINT/SUZUKI)

177	89301T	Ring, [MX17] (Forward Clutch) (Teflon) 1985-Up	2-3	
179	89300AT	Ring, [MX17] (Direct Clutch) (Metal) 1985-Up	2	61200
184	89306T	Ring, [MX17] (Intermediate Shaft) (Teflon) 1985-Up	1	
195	89305T	Ring, [MX17] (2nd Coast Servo) (Teflon) 1985-Up	1	
		WASHERS & BEARINGS		
211	89424	Washer, [MX17] (Stator to Direct Drum) 1984-86	1	35616-32010
211	89424A	Washer, [MX17] (Stator to Direct Drum) 1986-Up	1	
225	89807B	Race, [MX17] (Stator to Forward Drum) (.08mm) (Front)	1	35789-32020
225	89426	Race, [MX17] (Stator to Forward Drum) (1.4mm) (Front)	1	35789-32030
226	89430	Bearing, [MX17] (Stator to Forward Drum)	1	90374-28005
227	89432	Race, [MX17] (Stator to Forward Drum) (Rear)	1	35789-32010
229	89422	Washer, [MX17] (Direct Drum to Forward Drum) (.138" Thick) (2.210"ID) 1985-86	1	35616-32021
229	89422A	Washer, [MX17] (Direct Drum to Forward Drum) (.118" Thick) (2.375"ID) 1987-Up	1	96057151
231	89811	Race, [MX17] (Forward Drum to Hub) (*Also Fits [MX17] Forward Hub to Front Planet) (Front)	1-2	35789-32040
232	89437	Bearing, [MX17] (Forward Drum to Hub) (*Also Fits [MX17] Forward Hub to Front Planet)	1-2	90374-22001
233	89809	Race, [MX17] (Forward Drum to Hub) (Rear)	1	35789-32050
234	89811	Race, [MX17] (Forward Hub to Front Planet) (Front)	1	
235	89437	Bearing, [MX17] (Forward Hub to Front Planet)	1	
236	89812	Race, [MX17] (Forward Hub to Front Planet) (Rear)	1	35789-32060
237	89813	Race, [MX17] (Forward Hub to Front Planet) (Rear)	1	35789-32070
238	89435	Bearing, [MX17] (Front Planet to Sun Gear)	1	90374-30006
241	89415B	Washer, [MX17] (Rear Planet to Rear Ring Gear) (Plastic) (*Tabs are in the Center ID of Washer Straight Across Center)	1	35738-12010
244	89416	Washer, [MX17] (Shell to Sprag) (2-3/4"OD) (Plastic)	1	35739-32011
246	89811B	Race, [MX17] (Sun Gear to Ring Gear Hub) (Front)	1	35789-22010
247	89439F	Bearing, [MX17] (Sun Gear to Rear Ring Gear Hub) (3-Piece Type)	1	90374-24002
248	89811A	Race, [MX17] (Sun Gear to Rear Ring Gear Hub) (Rear)	1	35789-32080
		GASKETS & RUBBER COMPONENTS		
300	89502	Gasket, [MX17] (Sprint, Suzuki) (Bottom Pan) 1985-Up	1	61170B
300	89502H	Gasket, [MX17] (Charade) 1988-Up	1	
311	89516	O-Ring, [MX17] (Pump Body) 1985-Up	1	
304	89515	Gasket, [MX17] (Case to Rear Cover) 1985-Up	1	
318	89514	Gasket, [MX17] (Bell Housing to Case) 1985-Up	1	
362	89591	O-Ring, [MX17] (Intermediate Servo Cover & Throttle Valve) 1985-Up	2	
		TECHNICAL MANUALS		
	TMSPRINT	Technical Manual, [MX17] (Sprint, Suzuki)	1	ATSG
		ELECTRICAL COMPONENTS		
410	89947M	Neutral Switch, [MX17]	1	
421	89755	Solenoid, [MX17] (Shift, Direct and 2nd Brake) (With Bracket) 1985-Up	2	Rostra
446	89994M	Wire Harness, [MX17] 1985-Up	1	
		HARD PARTS		
500	89916	Pump Complete, [MX17] 1985-86	1	
500	89916A	Pump Complete, [MX17] 1987-Up	1	
510	89912C	Pump Body W/Gears, [MX17] (With 6-Bolts to Case) 1985-Up	1	
520	89913A	Stator, [MX17] (Flat Pads) (1.850"OD of Direct Drum Bushing Support) (With Bushing Inside Rear) 1985-86 (With Short Vent Channel)	1	35370-32022
520	89913C	Stator, [MX17] (2.025"OD of Direct Drum Bushing Support) 1987-Up	1	

MX17 (SPRINT/SUZUKI)

		PUMP COMPONENTS		
	89969	Shaft, [MX17] (Stator Shaft Tube) 1985-Up	1	90374-22002
		HARD PARTS (Continued)		
554	89732A	Drum, [MX17] (Forward With Shaft) (3 Clutch) 1985-Up	1	35701-32021
555	89721D	Drum, [MX17] (Direct) (3 Clutch) (1-7/8"ID Bushing) 1985-86	1	
555	89721E	Drum, [MX17] (Direct) (3 Clutch) (2" ID Bushing) 1987-Up	1	
582	89747	Planet, [MX17] (Front) 1985-Up	1	
584	89748	Planet, [MX17] (Rear) (1.790" Overall Height) 1985-Up	1	
592	89896	Ring Gear, [MX17] (Front) (1.550" Tall) 1985-Up	1	35743-32040
592	89896A	Ring Gear, [MX17] (Front) (1.437" Tall) 1985-Up	1	35743-32010
594	89749	Ring Gear, [MX17] (Rear) (1.100" Tall) 1985-Up	1	
602	89875	Hub, [MX17] (Front Planet Ring Gear) 1985-Up	1	
604	89876	Hub, [MX17] (Rear Planet) 1985-Up	1	
612	89999A	Sun Gear, [MX17] (2-3/8" Long) (27 Teeth) 1985-Up	1	
622	89764	Shell, [MX17] (Input Sun) (39 Inner Teeth) 1985-Up	1	35790-32050
		SPRAGS & ONE WAY CLUTCHES		
654	89724	Sprag, [MX17] (#2 Sprag) (20-Elements) (4.810"OD) 1985-Up	1	
		HARD PARTS (Continued)		
710	89160A	Gear, [MX17] (Output With Intermediate Shaft) (45 Teeth) 1985-Up	1	
710	89160B	Gear, [MX17] (Output With Intermediate Shaft) (51 Teeth) 1985-Up	1	
712	89195J	Gear, [MX17] (Transfer Driven) (44 Teeth) 1985-Up	1	
712	89195JA	Gear, [MX17] (Transfer Driven) (50 Teeth) (5-1/2"OD) 1985-Up	1	
712	89195JB	Gear, [MX17] (Transfer Driven) (50 Teeth) (4-3/4"OD) 1985-Up	1	
715	89181BA	Differential, [MX17] (68 Teeth) (2-Grooves) (18 Teeth) (Plastic Speed-O Gear) 1985-Up	1	
715	89181B	Differential, [MX17] (69 Teeth) 1985-Up	1	
715	89181BB	Differential, [MX17] (69 Teeth) (27 Teeth) (Metal Speed-O Gear) (Diahatsu) 1985-Up	1	
715	89181BC	Differential, [MX17] (70 Teeth) (No Groove) 1985-Up	1	
715	89181BD	Differential, [MX17] (70 Teeth) (1-Groove) (Suzuki) 1985-Up	1	
715	89181BE	Differential, [MX17] (75 Teeth) 1985-Up	1	
715	89181BF	Differential, [MX17] (78 Teeth) 1985-Up	1	
715	89181BG	Differential, [MX17] (79 Teeth) (18 Teeth) (Plastic Speed-O Gear) 1985-Up	1	
715	89181BH	Differential, [MX17] (79 Teeth) (18 Teeth) (Steel Speed-O Gear) 1985-Up	1	
715	89181BI	Differential, [MX17] (79 Teeth) (14 Teeth) (Steel Speed-O Gear) 1985-Up	1	
730	89196CA	Pinion, [MX17] (19 Teeth) (1-Groove) 1985-Up	1	
730	89196CB	Pinion, [MX17] (19 Teeth) (No Groove) 1985-Up	1	
730	89196C	Pinion, [MX17] (20 Teeth) (Sprint) 1985-Up	1	
740	89754C	Valve Body, [MX17] (With 2-Solenoids) 1985-Up	1	
750	89703D	Bell Housing, [MX17] (Top Bolts 6-1/4") (5/8"OD Speed-O Hole) 1985-Up	1	
750	89703DA	Bell Housing, [MX17] (Top Bolts 6-1/4") (7/8"OD Speed-O Hole) 1985-Up	1	
750	89703DB	Bell Housing, [MX17] (Top Bolts 5-1/2") (7/8"OD Speed-O Hole) 1985-Up	1	
759	89806E	Rear Cover, [MX17] (14-Bolts) (Without Bracket) 1985-Up	1	
759	89806EA	Rear Cover, [MX17] (14-Bolts) (With 3-Bolt Bracket) 1985-Up	1	
759	89806EB	Rear Cover, [MX17] (16-Bolt) (Without Bracket) 1985-Up	1	

MX17 (SPRINT/SUZUKI)

760	89701M	Case, [MX17] (Without Speed Sensor) 1985-Up	1	
760	89701MA	Case, [MX17] (With Speed Sensor) 1985-Up	1	
765	89802B	Pan, [MX17] (Bottom) 1985-Up	1	
905	K89895M	Servo Assembly, [MX17] (Intermediate) 1985-Up	1	
925	K89890M	Accumulator Assembly, [MX17] 1985-Up	1	
964	89806M	Piston, [MX17] (Forward Clutch) 1985-Up	1	
965	89807M	Piston, [MX17] (Direct Clutch) (3-1/4”ID) (.385” Thick) 1985-Up	1	
966	89808M	Piston, [MX17] (Reverse Clutch) 1985-Up	1	
991	K89676M	Linkage Assembly, [MX17] (Internal) 1985-Up	1	
992	89675M	Shift Lever, [MX17] 1985-Up	1	
995	K89678M	Park Pawl Assembly, [MX17] 1985-Up	1	
999	K89679M	Tube Assembly, [MX17] 1985-Up	1	

SATURN TAAT

FWD 4 Speed

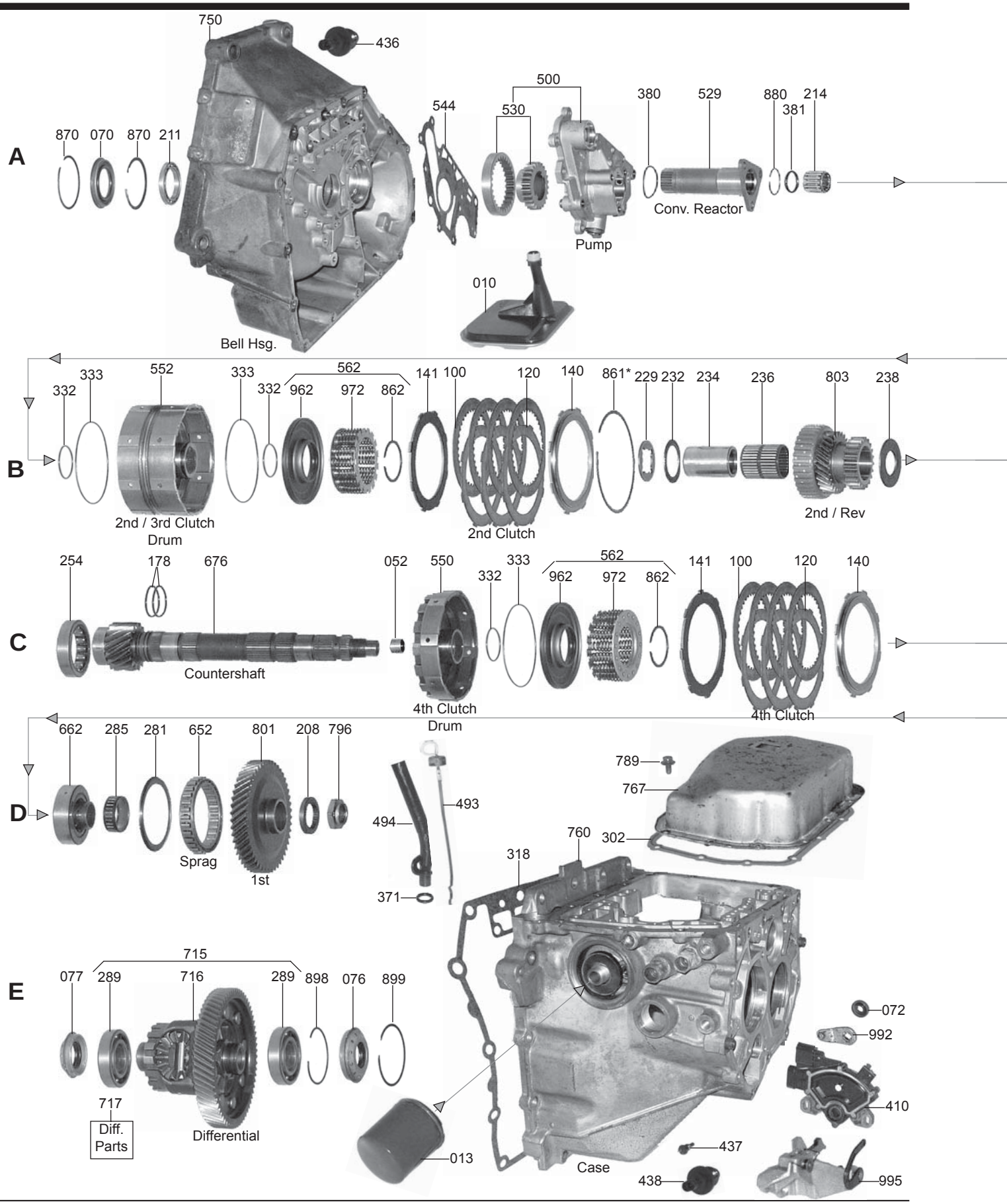

FWD 4 Speed

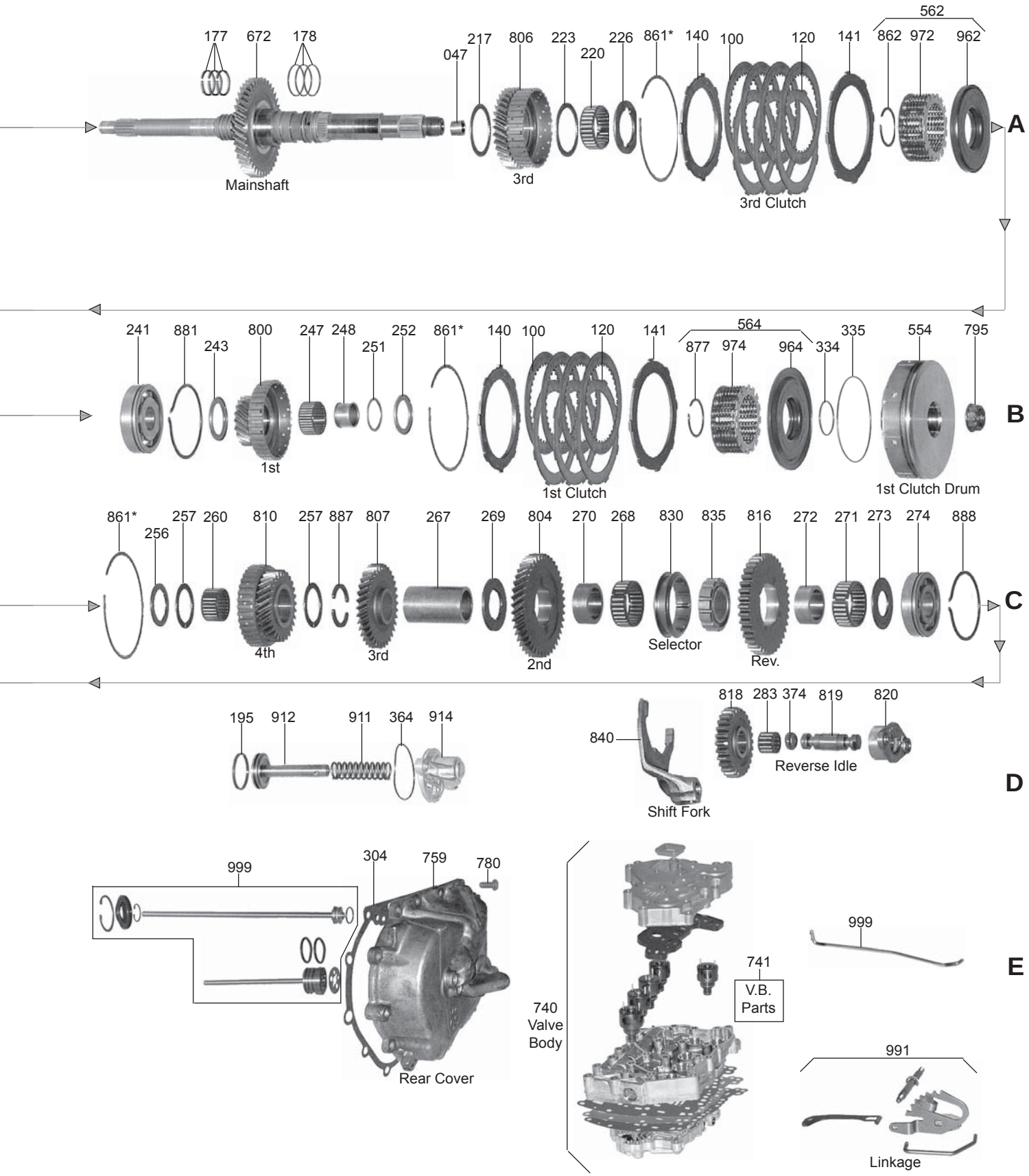
177
672
178
Mainshaft
047
217
806
3rd
223
220
226
861*
140
100
120
3rd Clutch
141
562
862
972
962
A
241
881
243
800
1st
247
248
251
252
861*
140
100
1st Clutch
120
141
564
877
974
964
334
335
554
1st Clutch Drum
795
B
861*
256
257
260
810
4th
257
887
807
3rd
267
269
804
2nd
270
268
830
Selector
835
816
Rev.
272
271
273
274
888
C
195
912
911
364
914
840
Shift Fork
818
283
374
819
820
Reverse Idle
D
999
304
759
780
Rear Cover
740
Valve
Body
741
V.B.
Parts
999
991
Linkage
E

SATURN TAAT

ILL#	PART#	DESCRIPTION	QTY	REF #
		OVERHAUL KITS		
	K95900	Overhaul Kit, (Saturn) (With Bonded Pistons) 1991-Up	1	
		MASTER L/STEEL KIT		
****	**SEE DK9500**	***Use DK9500 (Frictions & Steels Are 1-Sided) **There Is No Less Steels Kit****	1	
		MASTER W/STEEL KIT		
	DK9500	Master W/Steels Kit, (Saturn) (With Bonded Pistons) 1991-Up	1	
		FILTER		
010	95710	Filter, (Saturn) (Sump) (Internal) **(*Disassembly Required)** 1991-Up	1	21002346
013	95711	Filter, (Saturn) (Spin-on) (External) 1991-Up	1	21002303
		MISC. FILTERS		
	95712	Filter, (Saturn) (Thimble Screen) (Small) 1991-Up	1	21002151
	95713	Filter, (Saturn) (Thimble Screen) (Large) 1991-Up	1	21002096
		BUSHINGS		
	K95901	Bushing Kit, (Saturn) 1991-Up	1	
047	95001	Bushing, (Saturn) (Mainshaft) (Rear) (*Also Fits Countershaft # 052) 1991-Up	1-2	
052	95001	Bushing, (Saturn) (Countershaft) (Rear) 1991-Up	1	
		METAL CLAD SEALS		
070	95151	Seal, (Saturn) (Front) 1991-Up	1	21001660
072	95154	Seal, (Saturn) (Manual Lever Shaft) 1991-93	1	21002778
072	95154A	Seal, (Saturn) (Manual Lever Shaft) 1994-Up	1	21002853
	95155	Seal, (Saturn) (Rear Cover to Pinion Shaft Pilot) (Black Plastic) 1991-Up	1	21001662
076	95153	Seal, (Saturn) (Left Axle) (Case Side) 1991-Up	1	21002283
077	95152	Seal, (Satrun) (Right Axle) (Bell Housing Side) 1991-Up	1	
		FRICTION CLUTCH		
100	95103	Friction, (Saturn) (All Drums) (.061") (With 1-Sided Friction) (Internal Splines)	15	21002870
120	95100	Friction, (Saturn) (All Drums) (.061") (With 1-Sided Friction) (External Splines)	11	21002871
141	95714	Friction, (Saturn) (All Drums) (.130") (With 1-Sided Friction) (External Splines) (Apply Plate)	4	21002567
		CLUTCH PRESSURE PLATES		
140	95715	Pressure Plate, (Saturn) (*All Drums) (Top)	4	21001597
		OIL SEALING RINGS		
	K95903	Ring Kit, (Saturn) 1991-Up	1	
		WASHERS & BEARINGS		
	K95907	Washer Kit, (Saturn) 1991-Up	1	
208	95414	Washer, (Saturn) (Under Counter Shaft Nut)	1	
211	95415	Bearing, (Saturn) (Converter Nut to Bell Housing)	1	
214	95597	Roller Bearing, (Saturn) (Converter Reactor to Mainshaft)	1	
217	95416	Thrust Bearing, (Saturn) (Mainshaft to 3rd Gear)	1	
220	95593	Roller Bearing, (Saturn) (3rd Gear to Mainshaft)	1	
223	95417	Thrust Bearing, (Saturn) (3rd Gear to 2nd & 3rd Drum)	1	
226	95408	Race, (Saturn) (3rd Gear to 2nd & 3rd Drum)	1	
229	95407	Race, (Saturn) (2nd & 3rd Drum to 2nd / Reverse Gear)	1	

232	95418	Thrust Bearing, (Saturn) (2nd & 3rd Drum to 2nd / Reverse Gear)	1	
234	95819	Collar, (Saturn) (Mainshaft to 2nd / Reverse Gear)	1	
236	95592	Roller Bearing, (Saturn) (2nd / Reverse Gear to Collar)	1	
238	95419	Thrust Bearing With Race, (Saturn) (2nd / Reverse Gear to Ball Bearing)	1	
241	95591	Ball Bearing, (Saturn) (Mainshaft to Case)	1	
243	95405	Thrust Washer, (Saturn) (Ball Bearing to 1st Gear) (Mainshaft)	1	
247	95598	Roller Bearing, (Saturn) (1st Gear to Mainshaft)	1	
248	95821	Collar, (Saturn) (1st Gear to Mainshaft)	1	
251	95420	Thrust Bearing, (Saturn) (1st Gear to 1st Clutch Drum) (Mainshaft)	1	
252	95406	Race, (Saturn) (1st Gear to 1st Clutch Drum) (Mainshaft)	1	
254	95822	Roller Bearing, (Saturn) (Bell Housing to Countershaft)	1	
256	95411	Race, (Saturn) (4th Clutch Drum to 4th Gear) (Countershaft)	1	
257	95412	Thrust Bearing, (Saturn) (4th Clutch Drum to 4th Gear) (Countershaft) (*Also 4th Gear to 3rd Gear) (Countershaft)	1	
260	95450	Roller Bearing, (Saturn) (4th Gear to Countershaft)	1	
267	95823	Collar, (Saturn) (3rd Gear to 2nd Gear) (Countershaft)	1	
268	95595	Roller Bearing, (Saturn) (2nd Gear to Countershaft) (1.575”OD)	1	
268	95595B	Roller Bearing, (Saturn) (2nd Gear to Countershaft) (1.810”OD)	1	
269	95410	Race, (Saturn) (Collar to 2nd Gear) (Countershaft)	1	
270	95820	Collar, (Saturn) (2nd Gear to Countershaft)	1	
271	95595	Roller Bearing, (Saturn) (Reverse Gear to Countershaft)	1	
272	95820	Collar, (Saturn) (Reverse Gear to Countershaft)	1	
273	95409	Race, (Saturn) (Reverse Gear to Ball Bearing) (Countershaft)	1	
274	95596	Ball Bearing, (Saturn) (Countershaft to Case)	1	
281	95413	Retainer, (Saturn) (Holds Sprag In)	1	
283	95599	Roller Bearing, (Saturn) (Reverse Idler Gear to Shaft)	1	
285	95595A	Roller Bearing, (Saturn) (1st Gear to Inner Sprag Race) (Countershaft)	1	
289	86097	Ball Bearing, (Saturn) (Differential) (Both Sides)	2	
		GASKETS		
302	95500	Gasket, (Saturn) (Top Pan) 1991-96	1	21001683
302	95500A	Gasket, (Saturn) (Top Pan) (Molded Rubber) 1997-Up	1	21003202
304	95503	Gasket, (Saturn) (Rear Cover to Case) 1991-Up	1	21001684
318	95505	Gasket, (Saturn) (Bell Housing to Case) 1991-Up	1	21003108
	95509	Gasket, (Saturn) (Valve Body Spacer Plate) (Upper & Lower) (Takes 2) 1991-92	2	21002527
	95509A	Gasket, (Saturn) (Valve Body Spacer Plate) (Upper & Lower) (Takes 2) 1993-96	2	21002390
	95509B	Gasket, (Saturn) (Valve Body Spacer Plate) (Upper & Lower) (Takes 2) 1997-Up	2	21003530
		TECHNICAL MANUALS		
	TMSATURN	Technical Manual, (Saturn) (TAAT) 1991-Up	1	ATSG
		ELECTRICAL COMPONENTS		
410	95947	Neutral Switch, (Saturn)	1	21020129
	95950	Actuator, (Saturn) (Shift Solenoid) (Blue Top) 1991-92	5	21002248
	95950B	Actuator, (Saturn) (Shift Solenoid) (White Top) 1997-Up (*Retro Fits 1993-Up)	5	
436	95955	Sensor, (Saturn) (Output Speed (VSS) & Input Speed)	2	

SATURN TAAT

437	95952	Sensor, (Saturn) (Oil Temperature) (2-Prong)	1	
444	95982	Connector, (Saturn) (Actuator) 1991-Up	1	2100828
	95995	External Repair Harness	1	
		HARD PARTS		
500	95912	Pump Assembly, (Saturn)	1	
		PUMP COMPONENTS		
	K044	Retainer/Clip Kit, (Saturn) (Lube Relief Valve) (Has 3-Retainers & 3-Clips) (*Fixes 3 Trans.)	1	Superior
529	95910	Converter Reactor, (Saturn) (Stator Tube) (18-Splines)	1	21003132
529	95910A	Converter Reactor, (Saturn) (Stator Tube) (29-Splines) (4-1/2" Long)	1	
530	K95201	Pump Gears, (Saturn)	1	
544	95202	Plate, (Saturn) (Pump to Bell Housing)	1	
		HARD PARTS (Continued)		
550	95736	Drum, (Saturn) (4th Clutch)	1	21003100
552	95735	Drum, (Saturn) (2nd & 3rd Clutch)	1	21001946
554	95734	Drum, (Saturn) (1st Clutch)	1	21001943
	K95920	Piston Kit, (Saturn) (For 1st, 2nd, 3rd & 4th Clutch Drums) (5-Pistons) 1991-04	3	
		SPRAGS & ONE WAY CLUTCHES		
652	95727	Sprag, (Saturn) (Input)	1	21001594
652	95727P	Sprag, (Saturn) (Input) (With Plastic Cage)	1	
662	95992	Inner Race, (Saturn) (Sprag)	1	
		HARD PARTS (Continued)		
672	95733	Mainshaft, (Saturn) (40 Teeth) (.460" Thick Gear)	1	21001729
672	95733A	Mainshaft, (Saturn) (40 Teeth) (.490" Thick Gear)	1	21002104
672	95733B	Mainshaft, (Saturn) (42 Teeth) (.450" Thick Gear)	1	21002188
672	95733C	Mainshaft, (Saturn) (42 Teeth) (.490" Thick Gear) (No Groove Under # 234 Race)	1	
672	95733D	Mainshaft, (Saturn) (42 Teeth) (.490" Thick Gear) (2-Grooves Under # 234 Race)	1	
676	95802	Countershaft, (Saturn) (Output Shaft) (15 Teeth)	1	
676	95802A	Countershaft, (Saturn) (Output Shaft) (16 Teeth)	1	
676	95802B	Countershaft, (Saturn) (Output Shaft) (17 Teeth)	1	
676	95802C	Countershaft, (Saturn) (Output Shaft) (18 Teeth)	1	
715	95999	Differential Assembly, (Saturn) (With 62 Teeth Ring Gear) 1991-94	1	21002752
715	95999A	Differential Assembly, (Saturn) (With 65 Teeth Ring Gear) 1995-98	1	
		VALVE BODIES (REBUILT)		
740	GM-4639	Valve Body, (Saturn) [TAAT] (5-Valve 1st Design) (*Does Not Include Manual Valve) 1991-92	1	
740	GM-4640	Valve Body, (Saturn) [TAAT] (4-Valve 2nd Design) (*Does Not Include Manual Valve) 92-Up	1	
		VALVE BODIES		
740	95200	Valve Body, (Saturn) (1st Design) (With TCC Enable Valve In Lower Valve Body Section) 1991-92 (*Has a Flat Area on Manual Valve)	1	21002273
740	95200A	Valve Body, (Saturn) (2nd Design) (No TCC Enable Valve In Lower Valve Body Section) 1992-93 (No Plastic End on Manual Shaft)	1	
740	95201	Valve Body, (Saturn) (3rd Design) 1994-Up (With Plastic End on Manual Valve)	1	21005971
		VALVE BODY COMPONENTS		
741	SC-TAAT	Sure Cure Kit, (Saturn) [TAAT] **(*Use Tool # T-95200-TL)**	1	Sonnax
741	95200-06	Valve, (Saturn) [TAAT] (Pressure Regulator)	1	Sonnax
741	95200-03K	Valve & Sleeve Assembly, (Saturn) [TAAT] (Pressure Regulator Boost) (Type 2-Valve Body) (2 /O-Ring Type)	1	Sonnax

741	95200-05K	Sleeve Assembly, (Saturn) (Pressure Regulator) (Sleeve & Retainer) **(*Requires 95200-TL Reamer)**	1	Sonnax
200	95200-TL	Reamer Assembly, (Saturn) **(*Use With 95200-05K)**	1	Sonnax
741	95200-01	Spring, (Saturn) (Line Pressure Regulator)	1	Sonnax
		HARD PARTS (Continued)		
750	95703	Bell Housing, (Saturn) (With Raised Mounting Boss at 3:00) (No Threaded Mounting Bosses Around Differential Seal)	1	21001711
750	95703A	Bell Housing, (Saturn) (With Raised Mounting Boss at 3:00) (With 3-Threaded Mounting Bosses Around Differential Seal) (Cast # 21002323)	1	
750	95703B	Bell Housing, (Saturn) (With Raised Mounting Boss at 3:00) (With 3-Threaded Mounting Bosses Around Differential Seal) (No Cast #)	1	
750	95703C	Bell Housing, (Saturn) (With Unthreaded Raised Boss at 3:00) (No Mounting Holes Around Differential Seal) (Cast # 2100323)	1	
750	95703D	Bell Housing, (Saturn) (With Unthreaded Raised Boss at 3:00) (No Mounting Holes Around Differential Seal) (Cast # 21002656)	1	
750	95703E	Bell Housing, (Saturn) (No Raised Mounting Boss at 3:00) (No Threaded Mounting Bosses Around Differential Seal) (Cast # 21002550)	1	21003222
750	95703F	Bell Housing, (Saturn) (No Raised Mounting Boss at 3:00) (No Threaded Mounting Bosses Around Differential Seal) (Cast # 21003342)	1	
759	95702	Cover, (Saturn) (Rear) (With Tubes) (Mainshaft Tube Bolts to the Inside of Cover)	1	21002421
759	95702A	Cover, (Saturn) (Rear) (With Tubes) (Mainshaft Tube Bolts to the Outside of Cover)	1	
760	95701	Case, (Saturn) 1991-92	1	21002449
760	95701A	Case, (Saturn) 1992-Up	1	21002622
767	95801	Pan, (Saturn) (Top)	1	21001584
795	95948	Nut, (Saturn) (Mainshaft)	1	21001680
796	95948A	Nut, (Saturn) (Countershaft)	1	21001679
800	95817	Gear, (Saturn) (1st Drive) (19 Teeth)	1	21002072
800	95817A	Gear, (Saturn) (1st Drive) (21 Teeth)	1	21001640
801	95825	Gear, (Saturn) (1st Driven) (47 Teeth)	1	21001549
801	95825A	Gear, (Saturn) (1st Driven) (48 Teeth) (1-Groove)	1	21002065
801	95825B	Gear, (Saturn) (1st Driven) (48 Teeth) (No Groove)	1	
803	95816	Gear, (Saturn) (2nd / Reverse Drive) (30 Teeth)	1	21002073
803	95816A	Gear, (Saturn) (2nd / Reverse Drive) (27 Teeth)	1	21001641
804	95919	Gear, (Saturn) (2nd Driven) (38 Teeth) (1.575”ID)	1	21002067
804	95919B	Gear, (Saturn) (2nd Driven) (38 Teeth) (1.810”ID)	1	
804	95919A	Gear, (Saturn) (2nd Driven) (42 Teeth) (1.575”ID)	1	21001553
804	95919C	Gear, (Saturn) (2nd Driven) (42 Teeth) (1.810”ID)	1	
806	95818	Gear, (Saturn) (3rd Drive) (37 Teeth)	1	21001599
806	95818A	Gear, (Saturn) (3rd Drive) (33 Teeth)	1	21001643
807	95924	Gear, (Saturn) (3rd Driven) (30 Teeth)	1	21001555
807	95924A	Gear, (Saturn) (3rd Driven) (34 Teeth)	1	21001591
810	95918	Gear, (Saturn) (4th Driven) (28 Teeth) (*Fits Mainshaft (#95733) (40 Teeth) (.460” Thick Gear)	1	21001600
810	95918B	Gear, (Saturn) (4th Driven) (28 Teeth) (*Fits Mainshaft (#95733A) (40 Teeth) (.490” Thick Gear)	1	
810	95918A	Gear, (Saturn) (4th Driven) (25 Teeth) (*Fits Mainshaft (#95733B) (42 Teeth) (.450” Thick Gear)	1	21001642
810	95918C	Gear, (Saturn) (4th Driven) (25 Teeth) (*Fits Mainshaft (#95733C or 95733D) (42 Teeth) (.490” Thick Gear)	1	
816	95821	Gear, (Saturn) (Reverse Driven) (40 Teeth) (.450” Thick Teeth)	1	21001579
816	95821A	Gear, (Saturn) (Reverse Driven) (40 Teeth) (.510” Thick Teeth)	1	

SATURN TAAT

818	95823	Gear, (Saturn) (Reverse Idler) (27 Teeth)	1	21002429
830	95822	Selector, (Saturn) (2nd & Reverse)	1	21001784
835	95991	Hub, (Saturn) (2nd & Reverse Selector)	1	21001568
840	95624	Fork, (Saturn) (2nd & Reverse Shifting) 1991-92	1	21005969
840	95624A	Fork, (Saturn) (2nd & Reverse Shifting) 1993-Up	1	21002617
861	95601	Snap Ring, (Saturn) (Holds Pressure Plate in Drum)	4	21002290
862	95602	Snap Ring, (Saturn) (Holds Retainer in 2nd, 3rd, & 4th Clutch Drum)	3	21001626
877	95603	Snap Ring, (Saturn) (Holds Retainer in 1st Clutch Drum)	1	21002178
870	95604	Snap Ring, (Saturn) (Holds Front Seal to Bell Housing)	1	21002143
870	95605	Snap Ring, (Saturn) (Holds Bearing Under Front Seal to Bell Housing)	1	21002275
880	95606	Snap Ring, (Saturn) (Holds Bearing in Converter Reactor)	1	
881	95607	Snap Ring, (Saturn) (Holds Ball Bearing on Mainshaft to Case)	1	
887	95608	Retainer, (Saturn) (Horse Shoe Clips)	1	21002173
888	95609	Snap Ring, (Saturn) (Holds Ball Bearing on Countershaft to Case)	1	
	95610	Snap Ring, (Saturn) (Holds 4th Clutch Feed Pipe to Rear Cover) (Large Outer)	1	
	95610A	Snap Ring, (Saturn) (Holds 4th Clutch Feed Pipe to Rear Cover) (Small Inner)	1	
898	95611	Snap Ring, (Saturn) (Under Seal-Case Side) (.051” Thick)	1	21002329
898	95611A	Snap Ring, (Saturn) (Under Seal-Case Side) (.055” Thick)	1	21002324
898	95611B	Snap Ring, (Saturn) (Under Seal-Case Side) (.059” Thick)	1	21002325
898	95611C	Snap Ring, (Saturn) (Under Seal-Case Side) (.063” Thick)	1	21002326
898	95611D	Snap Ring, (Saturn) (Under Seal-Case Side) (.067” Thick)	1	21002327
898	95611E	Snap Ring, (Saturn) (Under Seal-Case Side) (.071” Thick)	1	21002328
898	95611F	Snap Ring, (Saturn) (Under Seal-Case Side) (.075” Thick)	1	21002330
898	95611G	Snap Ring, (Saturn) (Under Seal-Case Side) (.079” Thick)	1	21002331
899	95612	Snap Ring, (Saturn) (Holds Axle Seal in Case)	1	21002436
962	95982	Piston, (Saturn) (For 2nd, 3rd & 4th Clutch Drums Bonded)	3	21001582
964	95981	Piston, (Saturn) (1st Clutch Drum Bonded)	1	21001581
972	95721	Retainer W/Spring, (Saturn) (2nd, 3rd & 4th Clutch Drums)	3	21001616
974	95720	Retainer W/Spring, (Saturn) (1st Clutch Drum)	1	21002178
991	K95676	Linkage Assembly, (Saturn) (Internal)	1	
992	95675A	Shift Lever, (Saturn) (External)	1	
995	K95678	Park Pawl Assembly, (Saturn)	1	21002371
999	95679	Tube, (Saturn) (Oil)	1	

NOTES

SATURN VT20/VT25-E

FWD CVT

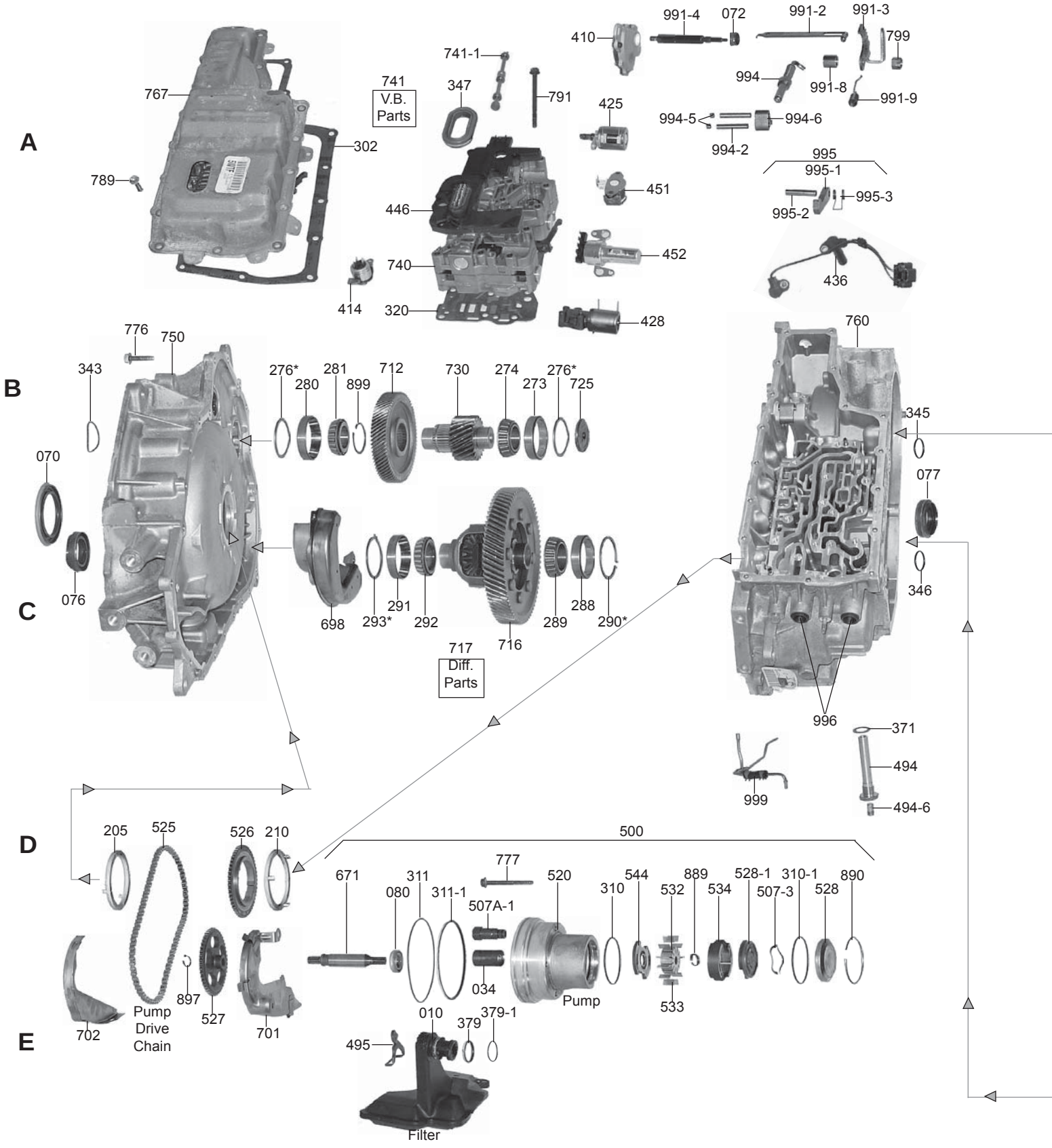

FWD CVT

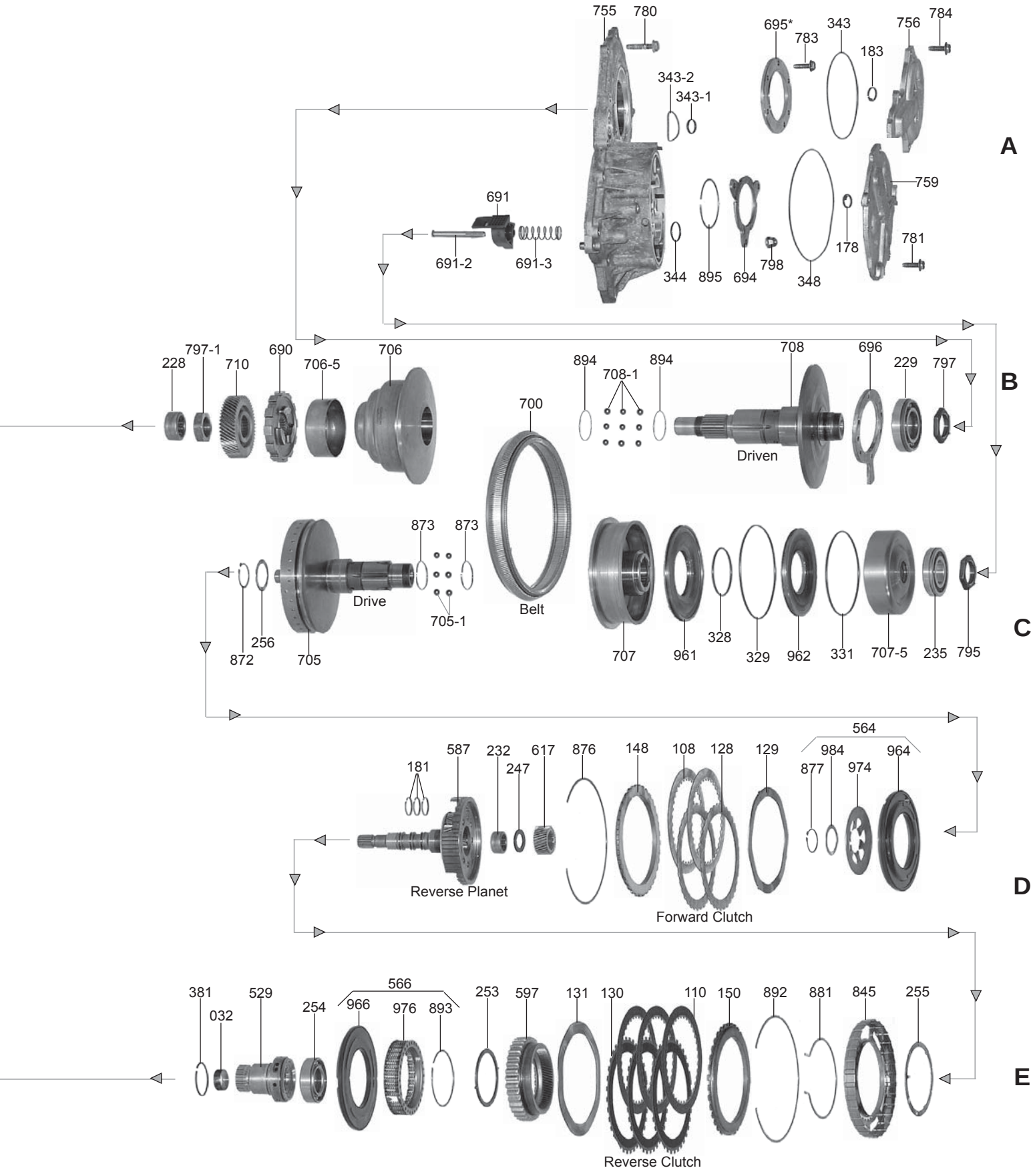
755
780
695*
783
343
183
756
784
343-2
343-1
A
691
691-2
691-3
344
895
694
798
348
178
759
781
228
797-1
710
690
706-5
706
894
708-1
894
700
708
696
229
797
B
Driven
873
873
Drive
705-1
872
256
705
Belt
707
961
328
329
962
331
707-5
235
795
C
564
181
587
232
247
617
876
148
108
128
129
984
964
877
974
Reverse Planet
Forward Clutch
D
381
032
529
254
566
966
976
893
253
597
131
130
110
150
892
881
845
255
Reverse Clutch
E

SATURN VT20/VT25-E

ILL#	PART#	DESCRIPTION	QTY	REF #
		OVERHAUL KITS		
	K105900P	Overhaul Kit, [VT25-E] (CVT) (With Pistons) 2002-Up	1	
	K105900	Overhaul Kit, [VT25-E] (CVT) (Without Pistons) 2002-Up	1	
		MASTER W/STEELS KITS		
	DK10500P	Master W/Steels Kit, [VT25-E] (CVT) (1-Sided Friction / Steels) (With Pistons) 2002-Up	1	
	DK105900	Master W/Steels Kit, [VT25-E] (CVT) (1-Sided Friction / Steels) (Without Pistons) 2002-Up	1	
		FILTERS		
010	105710	Filter, [VT25-E] (Saturn) 2002-06 (Filtertek)	1	
		BUSHINGS		
	K105901	Bushing Kit, [VT25-E] 2002-Up	1	
032	105001	Bushing, [VT25-E] (Converter Reactor) (Front) (1.110”OD) (.985”ID) 2002-Up	1	
034	105005	Bushing, [VT25-E] (Pump Housing) (1.485”Long) (.750”ID) 2002-Up	1	
		METAL CLAD SEALS		
070	105151	Seal, [VT25-E] (Front) (Converter) (3.353”OD) (2.265”ID) 2002-Up	1	
072	84511	Seal, [VT25-E] (Manual Shaft) (.355”Thick) (.755”OD) 2002-Up	1	
076	105153	Seal, [VT25-E] (Axle, Bell Housing Side) (2.132”OD) (1.340”ID) 2002-Up	2	
077	105153	Seal, [VT25-E] (Axle, Case Side) (2.132”OD) (1.340”ID) 2002-Up	1	
080	105158	Seal, [VT25-E] (Pump Shaft) (1.312”OD) (.715”ID) 2002-Up	1	
		FRICTIONS		
108	105101A	Friction, [VT25-E] (Forward Clutch) (.060”) (36 Teeth Internal) (6-1/8”OD) (1-Sided)	2	
128	105101B	Friction, [VT25-E] (Forward Clutch) (.059”) (36 Teeth External) (5.050”ID) (1-Sided)	2	
110	105103A	Friction, [VT25-E] (Reverse Clutch) (.060”) (36 Teeth Internal) (6-1/8”OD) (1-Sided)	3	
130	105103B	Friction, [VT25-E] (Reverse Clutch) (.061”) (External Teeth) (5.058”ID) (1-Sided)	3	
	K105100	Friction Module, [VT25-E] (1-Sided Frictions) 2002-06	1	
		STEELS		
129	105110	Steel, [VT25-E] (Forward Clutch) (.053”) (3 Teeth) (5.060”ID) (Waved)	1	
131	105111	Steel, [VT25-E] (Reverse Clutch) (.055”) (No Teeth) (6-1/2”OD) (5-1/8”ID) (Waved)	1	
		PRESSURE PLATES		
148	105130	Pressure Plate, [VT25-E] (Forward Clutch) (.109”) (36 Teeth) (5.020”ID) (Stepped) (Stamped “C”)	1	
150	105131	Pressure Plate, [VT25-E] (Reverse Clutch) (.118”) (31 Teeth) (5.015”ID) (Stepped) (Stamped “H”)	1	
		SEALING RINGS		
	K105903	Ring Kit, [VT25-E] (CVT) (Teflon) 2002-Up	1	
178	105301	Ring, [VT25-E] (Drive Pulley Shaft to Drive Pulley Cover) (.076”Thick) (.840”OD) (Teflon)	1-2	
181	105302	Ring, [VT25-E] (Input Shaft) (Large Ones) (1.070”OD) (Solid) (Teflon) 2002-Up	3	
183	105301	Ring, [VT25-E] (Driven Pulley Shaft to Driven Pully Cover) (.076” Thick) (.840” OD) (Teflon)	1	
		WASHERS & BEARINGS		
205	105401	Washer, [VT25-E] (Bell Housing to Drive Pump Sprocket) (.198”Thick) (3.360”OD) (2.830”ID) 2002-Up	1-2	
210	105401	Washer, [VT25-E] (Drive Pump Sprocket to Case) (3-Tabs) 2002-Up	1	

228	105415	Caged Needle Bearing, [VT25-E] (Bell Housing to Driven Pulley Shaft) (.775" Thick) (1.690"OD) (12-Needles) (Cast # FC69847 INA) 2002-Up	1	
229	105416	Ball Bearing, [VT25-E] (Driven Pulley Shaft to Case Cover) (.707" Thick) (3.150"OD) (1.575"ID) (Cast # BAQ-3929A/HN3 SKF) (Stepped on Overdrive) 2002-Up	1	
232	105417	Caged Needle Bearing, [VT25-E] (Reverse Planet to Drive Pulley # 705) (.790"OD) (14-Needles) (Cast # F-234550 INA) 2002-Up	1	
235	105418	Ball Bearing, [VT25-E] (Drive Pulley) (Rear) (.590" Thick) (2.835"OD) (1.375"ID) (9-Balls) (Cast # 803901 FAG) 2002-Up	1	
247	105402	Washer, [VT25-E] (Reverse Planet to Sun Gear) (.078" Thick) (1.380"OD) (.794"ID) (Plastic)	1	
253	105403	Washer, [VT25-E] (Case to Reverse Clutch Hub) (.112" Thick) (3.352"OD) (2.800"ID) (Plastic) (2-Outer Tabs) 2002-Up	1	
254	105419	Ball Bearing, [VT25-E] (Case to Input Shaft) (.630" Thick) (2.520"OD) (1.338"ID) 2002-Up	1	
255	105404	Washer, [VT25-E] (Reverse Planet Ring Gear to Reverse Planet) (.065" Thick) (4.325"OD) (3.720"ID) (With 3-ID Tabs) 2002-Up	1	
273	105978	Cup Race, [VT25-E] (Pinion to Case) (*Also Pinion to Bell Housing #280) (2.330"OD) (1.905"ID) (Cast # NP 735478 Timken) 2002-Up	1-2	
274	105977	Cone Bearing, [VT25-E] (Pinion to Case) (*Also Pinion to Bell Housing #281) (1.250"ID) (19-Rollers) (Cast # NP 785304 Timken) 2002-Up	1-2	
276	105441	Shim, [VT25-E] (Pinion to Case) (*Also Pinion to Bell Housing) (Selective) (2.345"OD) (1.960"ID) 2002-Up	1	
280	105978	Cup Race, [VT25E] (Pinion to Bell Housing)	1	
281	105977	Cone Bearing, [VT25E] (Pinion to Bell Housing)	1	
288	105978A	Cup Race, [VT25-E] (Differential Bearing to Case) (*Also Differential to Bell Housing #291) (.528" Thick) (2.480"OD) (2.058"ID) (Cast # NP350068 Timken) 2002-Up	1-2	
289	105977A	Cone Bearing, [VT25-E] (Differential to Case) (*Also Differential to Bell Housing #292) (1.495"ID) (22-Rollers) (Cast # NP423815) 2002-Up	1-2	
290	105442	Shim, [VT25-E] (Differential Cup Race to Case) (*Also Differential to Bell Housing #293) (Selective) (2.440"OD) (2.098"ID) (2-Ears With Open Ends) 2002-Up	1-2	
291	105978A	Cup Race, [VT25E] (Differential to Bell Housing)	1	
292	105977A	Cone Bearing , [VT25E] (Differential to Bell Housing)	1	
293	105442	Shim, [VT25E] (Differential to Bell Housing)	1	
		GASKETS & RUBBER COMPONENTS		
302	105500	Gasket, [VT25-E] (Top Pan) (17-Holes) (7" Wide) (17-3/4" Long) 2002-Up	1	
320	105532	Plate, [VT25-E] (Valve Body) (Bonded) (Cast # 585) 2002-Up	1	
347	105410	Boot, [VT25-E] (Case Connector to Top Pan) (.473"Thick) (1-5/8 x 2-7/8") (Oval, Orange)	1	
		TECHNICAL MANUALS		
	TMVT20/ VT25E	Technical Manual, [VT20 / VT25E]	1	ATSG
		ELECTRICAL COMPONENTS		
410	105947	Neutral Safety Switch, [VT25-E] (4-Pin Connector) 2002-Up	1	
414	105951	Sensor, [VT25-E] (Tier 2-Feed Fluid Pressure) (3-Blade) (Cast # PPO-PA-GF30)	1	
425	105941	Solenoid, [VT25-E] (Neutral Idle / TCC Control) (2-Blade) (1-Bolt) (Cast # D26E025i)	1	
428	105942	Solenoid, [VT25-E] (Line Pressure Control) (2-Blade) (3-Bolt) (Cast # D23N0228)	1	
436	105955	Sensor, [VT25-E] (Input & Output Speed) (2-Sensors) (7-Prong Connector)	1	
446	105987	Circuit Board, [VT25-E] (20-Blade Case Connector & 4-Blade Internal Connector) (Cast # 953981-1) 2002-Up	1	Borg-Warner
451	105941A	Solenoid, [VT25-E] (Neutral Idle / TCC / On-Off) (2-Blade) (2-Bolt) (With Open Windings)	1	
452	105943	Ratio Control Motor, [VT25-E] (5-Blade) (2-Bolt) (Cast # 1083L) 2002-Up	1	
		HARD PARTS		
495	105710B	Bracket, [VT25-E] (Filter) (1-Bolt) 2002-Up	1	

SATURN VT20/VT25-E

500	105911	Pump Assembly, [VT25-E] (12-Vane) 2002-Up	1	
525	105820	Chain, [VT25-E] (Pump Drive) (49-Links) (.265"Wide) 2002-Up	1	
526	105197	Sprocket, [VT25-E] (Pump Drive) (53 Teeth) (.470"Thick) (4.140"OD) (2.320"ID) (2-ID Notches)	1	
527	105198	Sprocket, [VT25-E] (Pump Driven) (48 Teeth) (3.740"OD) (14-Inner Splines) 2002-Up	1	
529	105450	Converter Reactor, [VT25-E] (3.020" Long) (2.600"OD) (1.795"ID) (31-Splines) 2002-Up	1	
587	105731	Planet W/Shaft, [VT25-E] (Reverse) (6 Gear) (6-9/16" Tall) (*Uses 32 Teeth Sun Gear # 617)	1	
597	105730	Ring Gear W/Hub, [VT25-E] (Reverse Planet With Forward Clutch Hub) (71 Teeth) (36-Outer Clutch Splines) (1.340" Thick) 2002-Up	1	
617	105748	Sun Gear, [VT25-E] (Reverse Planet) (32 Teeth) (.755" Thick) (1.606"OD) 2002-Up	1	
671	105875	Shaft, [VT25-E] (Pump Drive) (4-11/16" Long) (.750"OD) 2002-Up	1	
690	105690	Park Gear, [VT25-E] (12-Lugs) (27-Splines) (.785" Thick) (4.065"OD) 2002-Up	1	
691	105621	Variable Drive Pulley Follower, [VT25-E] (2.290" Long) (Black Plastic) 2002-Up	1	
691	105622	Variable Drive Pulley Follower Pin, [VT25-E] (3.095" Long) (.310"OD) 2002-Up	1	
691	105623	Variable Drive Pulley Follower Spring, [VT25-E] (2.235" Long) (.780"OD) 2002-Up	1	
694	105735	Retainer, [VT25-E] (Holds Bearing # 235 to Case Cover) (3-Bolt Steel) (2.405"ID)	1	
695	105735A	Retainer, [VT25-E] (Holds Bearing # 229 to Case Cover) (6-Holes) (4.410"OD) (2.794"ID)	1	
696	105735B	Retainer, [VT25-E] (Ball Bearing # 229) (.236" Thick) (4.415"OD) (3.050"ID) (1-Long Outer Tab) (8-Holes) 2002-Up	1	
698	105082	Oil Baffle, [VT25-E] (Differential) (3-Bolts to Bell) (Stamped 1573) 2002-Up	1	
700	105820B	Belt, [VT25-E] (Drive) **(*Use K105650A)** 2002-Up	1	
701	105822	Chain Guard, [VT25-E] (Rear) (3-Clips) (3-Bolt Holes) (Tin) (Stamped 2704 0424)	1	
702	105822A	Chain Guard, [VT25-E] (Front) (3-Slots) (1-Hole) (Tin) (Stamped 2705 0417) 2002-Up	1	
705	105192	Drive Pulley, [VT25-E] (Front Half) **(*Use K105650A)**	1	
705-1	105823	Steel Ball, [VT25-E] (Pulley Guides) (.236"OD) (Drive Pulley Takes (9-each) / Driven (6-each)	6-15	
706-5	105193	Driven Pulley, [VT25-E] (Front Half) **(*Use K105650A)**	1	
706	105660	Cover, [VT25-E] (Driven Pulley) (Front Half) (Tin) (1.165" Thick) (3.240"OD) (3-ID Notches)	1	
707	105192A	Drive Pulley, [VT25-E] (Rear Half) **(*Use K105650A)**	1	
707-5	105660A	Cover, [VT25-E] (Drive Pulley) (Rear Half) (1.514" Thick) (5.350"OD) (Cast # 700259 / 12 & 04 / 244 / 0303) 2002-Up	1	
707	K105650A	Pulley Assembly, [VT25-E] (Contains: From #872 to #795 & From #797-1 to #797) (With #755)	1	
708	105193A	Driven Pulley, [VT25-E] (Rear Half) **(*Use K105650A)**	1	
708-1	105823	Steel Ball, [VT25E] (Pully Guide) (.236"OD) (Driven)	9	
710	105194	Drive Transfer Gear, [VT25-E] (51 Teeth) (.885" Thick) (3.620"OD) (27-Splines) 2002-Up	1	
712	105195	Driven Transfer Gear, [VT25-E] (72 Teeth) (.845" Thick) (5.040"OD) 2002-Up	1	
716	105181	Differential Assembly, [VT25-E] (74 Teeth) (2-Grooves) (1.148" Thick) (7-13/16"OD Ring Gear) (8-Rivets)	1	
725	105885	Case Plug, [VT25-E] (Pinion to Case) (1.945"OD) (Cast # 2421493 & 030641) 2002-Up	1	
730	105196	Pinion, [VT25-E] (21 Teeth) (2-Grooves) (2.470"OD Gear) (3.805" Long) 2002-Up	1	
		VALVE BODIES		
740	105754	Valve Body, [VT25-E] (5-Switch) (Cast # 20600013DB) 2002-Up	1	
741	105683	Manual Valve, [VT25-E] (Valve Body) (5-3/4" Long) 2002-Up	1	
		HARD PARTS		
750	105703	Bell Housing, [VT25-E] (5-1/8" Top Bolts) (Starter at 3:30) (Cast # 24222691) 2002-Up	1	
755	105705	Case Cover, [VT25-E] (Aluminum) (14-Bolts to Case) (Cast # 24219404) 2002-Up	1	

756	105702	Rear Cover, [VT25-E] (Driven Pulley) (Aluminum) (6-Bolt) (Cast # 24223006/1) 2002-Up	1	
759	105702A	Rear Cover, [VT25-E] (Drive Pulley) (Aluminum) (4-Bolt) (Cast # 24223007/1) 2002-Up	1	
760	105701	Case, [VT25-E] (Cast # 24222695) 2002-Up	1	
767	105801	Pan, [VT25-E] (Top) (17-Bolt) (Tin) 2002-Up	1	
795	105948	Nut, [VT25-E] (Drive Pulley Shaft) (.308" Thick) (1.325"ID) (46mm) 2002-Up	1	
797	105948A	Nut, [VT25-E] (Driven Pulley Shaft) (Rear) (1.445"ID) (49mm) 2002-Up	1	
797	105948B	Nut, [VT25-E] (Driven Pulley Shaft) (Front) (1.125"ID) (42mm) 2002-Up	1	
845	105670	Reluctor, [VT25-E] (Speed Sensor) (6-7/8"OD) (30-Outer Splines) 2002-Up	1	
	K105928	Kit, Snap Ring, [VT25-E]	1	
961	105806	Piston, [VT25-E] (Drive Pulley Apply) (.555" Thick) (5.582"OD) (2.600"ID) 2002-Up	1	
962	105807	Piston, [VT25-E] (Drive Pulley Balance) (.480" Thick) (5.070"OD) (2.243"ID) 2002-Up	1	
964	105920	Piston, [VT25-E] (Forward Clutch) (.555" Thick) (5.745"OD) (3.075"ID) (Bonded) (W/Check Ball)	1	
966	105921	Piston, [VT25-E] (Reverse Clutch) (Bonded) (.475" Thick) (6-1/4"OD) (3.395"ID) 2002-Up	1	
974	105970	Spring, [VT25-E] (Forward Clutch Return) (.063" Thick) (3.845"OD) (6-Fingers) 2002-Up	1	
976	105971	Spring & Retainer, [VT25-E] (Reverse Clutch Return) (.920" Thick) (4.380"OD) (3.240"ID) (30-Coil Springs) 2002-Up	1	
984	105930	Retainer, [VT25-E] (Forward Clutch Return Spring) (.020" Thick) (1.750"OD) (1.260"ID) (*Also Fits [VT25-E] Spacer #256) 2002-Up	1-2	
991	105675	Manual Shaft, [VT25-E] (4-7/8" Long) 2002-Up	1	
994	105677	Park Rod Actuator, [VT25-E] (4-7/8" Long) (.710"OD Ball) 2002-Up	1	
995	K105678	Park Pawl Assembly, [VT25-E] (3-Pieces) (2.715" Long Park Pawl) 2002-Up	1	
996	105280	Fitting, [VT25-E] (Cooler Line) (Push-In Type) (Bonded) 2002-Up	1	
999	K105679	Tube Set, [VT25-E] (2-Pieces Metal Held By Rubber Hose) 2002-Up	1	

ALUMINUM POWERGLIDE

RWD 2 Speed

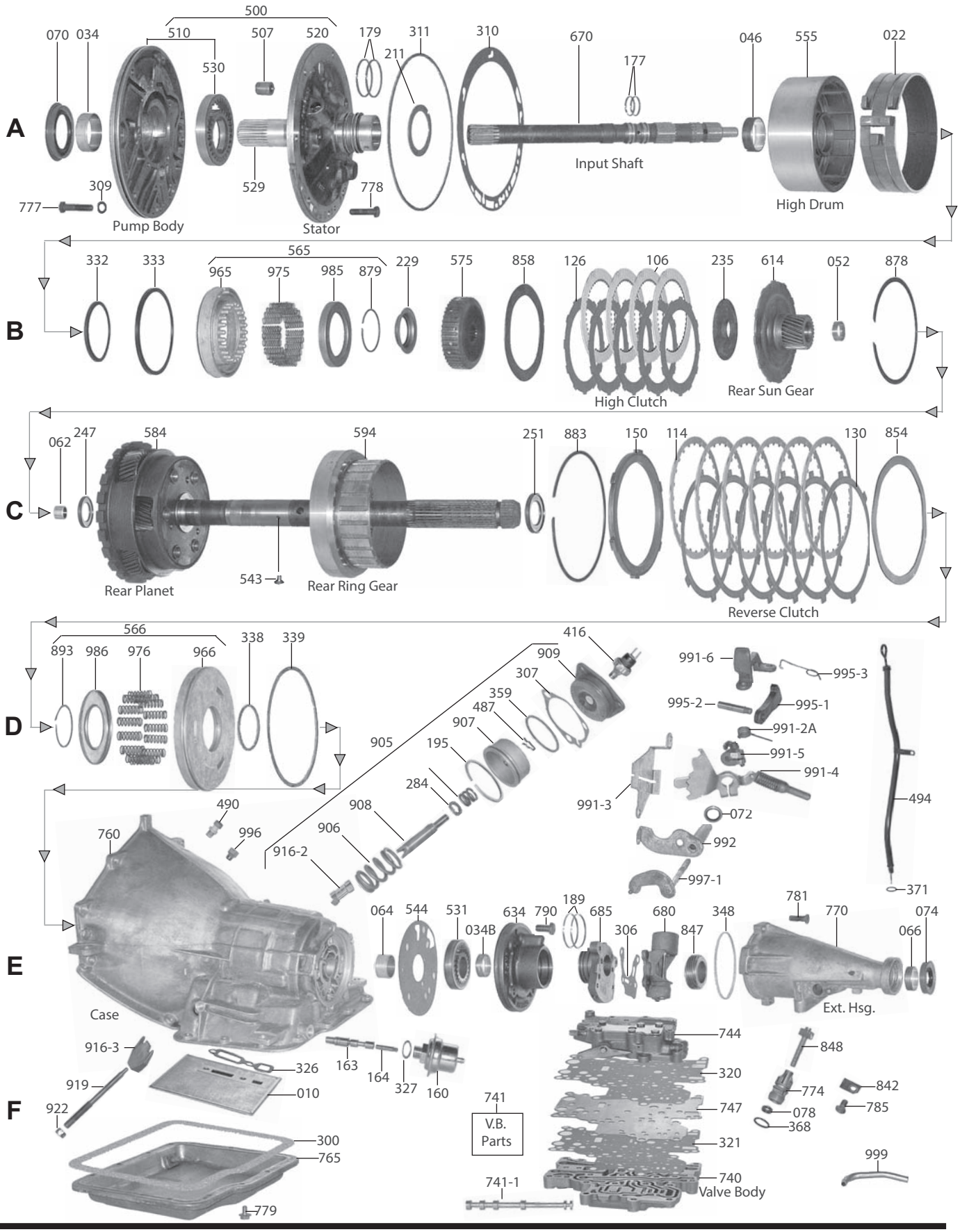

ALUMINUM POWERGLIDE

ILL#	PART#	DESCRIPTION	QTY	REF #
		PAPER & RUBBER KIT		
	K28900-1	Paper & Rubber Kit, [Aluminum Powerglide] 1962-73	1	
		OVERHAUL KITS		
	K28900	Overhaul Kit, [Aluminum Powerglide] 1962-73	1	
	K28900HP	Overhaul Kit, [Aluminum Powerglide] (*Racing) 1962-73 (With Teflon Rings)	1	
		MASTER L/STEEL KIT		
	DK2800D-S	Master L/Steels Kit, [Aluminum Powerglide] 1962-73	1	
	DK2800DHP-S	Master L/Steels Kit, [Aluminum Powerglide] (Hi-Performance Red) 1962-73	1	
		MASTER W/STEEL KIT		
	DK2800D	Master W/Steels Kit, [Aluminum Powerglide] 1962-73	1	
	DK2800DHP	Master W/Steels Kit, [Aluminum Powerglide] (Hi-Performance Red) 1962-73	1	
		FILTER		
010	28739	Filter, [Aluminum Powerglide] 1962-73	1	6263005
010	28739A	Filter, [Aluminum Powerglide] (Larger, Square) (*For Racing) 1962-73	1	
		FILTER KIT		
	FK28739A	Filter Kit, [Aluminum Powerglide] (Large, Square) 1962-73	1	
		BANDS		
022	8314A	Band, [Aluminum Powerglide] (1-7/8" Wide) 1962-73	1	
022	8314AK	Band, [Aluminum Powerglide] (Hi-Performance) (Kevlar) 1962-73	1	
022	8314AHP	Band, [Aluminum Powerglide] (Hi-Performance) (Red Lining) (1-7/8" Wide)	1	
022	28314K	Band, [Aluminum Powerglide] (Hi-Performance) (*Race Only) (Kevlar) 1962-73	1	Sonnax
022	8314BR	Band, [Aluminum Powerglide] (Hi-Performance) (*Racing) (2-1/4" Wide)	1	19961/K
		BUSHINGS		
	K28901	Bushing Kit, [Aluminum Powerglide] 1962-73	1	
034	8005	Bushing, [Aluminum Powerglide] (Front Pump Body) 1962-73	1	8623940
034	28001	Bushing, [Aluminum Powerglide] (Governor Support or Rear Pump) 1962-73	1	3789877
046	28005	Bushing, [Aluminum Powerglide] (High Clutch Drum) (Babbit) 1962-73 (*Can Use 65001)	1	3840760
046	65001	Bushing, [Aluminum Powerglide] (High Clutch Drum) (Bronze) 1962-73	1	
046	28005X	Bushing, [Aluminum Powerglide] (High Clutch Drum) (Finish In Place) 1962-73	1	Sonnax
046	28005S	Bushing, [Aluminum Powerglide] (High Clutch Drum) (Finished) 1962-73	1	Sonnax
052	8436	Bushing, [Aluminum Powerglide] (Sun Gear) (With Splines Inside) (Brass) 1962-73	1	Sonnax
062	8004	Bushing, [Aluminum Powerglide] (Output Shaft) (Pilot) 1962-73	1	3789034
064	28002	Bushing, [Aluminum Powerglide] (Case) 1962-73	1	3789009
066	8008	Bushing, [Aluminum Powerglide] (Extension Housing) 1962-73	1	6260048
		METAL CLAD SEALS		
070	38151	Seal, [Aluminum Powerglide] (Front) 1962-73	1	8670283
072	3768	Seal, [Aluminum Powerglide] (Linkage) 1962-73	1	3789137
074	8850B	Seal, [Aluminum Powerglide] (Rear) (With Flange, Without Boot) 1962-73	1	1243402
074	16695ES	Seal, [Aluminum Powerglide] (Rear) (With Flange, With Short Boot) 1962-73	1	
078	3991	Seal, [Aluminum Powerglide] (Speed-O Shaft)	1	1240382
		FRICTION CLUTCH		
106	18305B	Friction, [Aluminum Powerglide] (High Clutch) (.098") 1962-73	4	3779904
106	18305CHP	Friction, [Aluminum Powerglide] (High Clutch) (.061") (Hi-Performance Red) 1962-73	AR	

ALUMINUM POWERGLIDE

106	K18305X	Friction & Steel Kit, [Aluminum Powerglide] (High Clutch) (.061") (Hi-Performance Red) (Includes: 9-Frictions & 9-Kolene Steels)	1	Alto
106	K18305XHP	Friction & Steel Kit, [Aluminum Powerglide] (High Clutch) (Kilgore Effect) (Hi-Performance Red) (Single Sided)	1	
106	R18305BHP	Friction, [Aluminum Powerglide] (High Clutch) (.061") (Stage 1) 1962-73	4	
106	18305BHD	Friction, [Aluminum Powerglide] (High Clutch) (.098") (Heavy Duty)	4	
106	18305BHP	Friction, [Aluminum Powerglide] (High Clutch) (.098") (Hi-Performance Red) 1962-73	4	
106	K18305BHP	Friction Kit, [Aluminum Powerglide] (High Clutch) (.098") (Hi-Performance) (5-Per Kit) 1962-73	1	Alto
114	18506	Friction, [Aluminum Powerglide] (Reverse Clutch) (.098") 1962-73	5	8641512
114	18506HP	Friction, [Aluminum Powerglide] (Reverse Clutch) (.098") (Hi-Performance Red) 1962-73	5	
114	K18506HP	Friction, [Aluminum Powerglide] (Reverse Clutch) (.098") (Hi-Performance Red) (5-Per Kit) 1962-73	1	
114	R18506HP	Friction, [Aluminum Powerglide] (Low / Reverse Clutch) (.098") (Stage 1) 1962-73	5	
	K28100	Friction Module, [Aluminum Powerglide] 1962-73	1	
		STEEL CLUTCH		
126	18306B	Steel, [Aluminum Powerglide] (High Clutch) (.070") 1962-73	3-5	1366440
126	18306BK	Steel, [Aluminum Powerglide] (High Clutch) (.070") (Kolene) 1962-73	3-5	
126	18306C	Steel, [Aluminum Powerglide] (High Clutch) (.060") 1962-73	3-5	
126	18306CK	Steel, [Aluminum Powerglide] (High Clutch) (.060") (Kolene) 1962-73	3-5	
126	K18306BK	Steel Kit, [Aluminum Powerglide] (High Clutch) (.070") (Kolene) (5-Per Kit) 1962-73	1	
126	18306BAK	Steel, [Aluminum Powerglide] (High Clutch) (.070") (Kolene) (With Turbulator Holes) 1962-73	3-5	
126	18306CAK	Steel, [Aluminum Powerglide] (High Clutch) (.060") (Kolene) (With Turbulator Holes) 1962-73	3-5	
126	K18306BXK	Steel Kit, [Aluminum Powerglide] (High Clutch) (.060") (Kolene) (8-Per Kit) 1962-73	1	
130	18507	Steel, [Aluminum Powerglide] (Reverse Clutch) (.070") 1962-73	4-6	3799210
130	18507AK	Steel, [Aluminum Powerglide] (Reverse Clutch) (.070") (Kolene) 1962-73	4-6	
	K28110	Steel Module, [Aluminum Powerglide] 1962-73	1	
		CLUTCH PRESSURE PLATES		
150	18505A	Pressure Plate, [Aluminum Powerglide] (Reverse Clutch) 1962-73	1	
		MODULATORS		
160	28738X	Modulator, [Aluminum Powerglide] (Adjustable) 1962-73	1	5638205
160	28738-01K	Plug Kit, [Aluminum Powerglide] (Includes: Modulator Plug & Gasket)	1	Sonnax
		VALVE BODY KITS		
	PG-2S	Reprogramming Kit, [Aluminum Powerglide] (Full Race) (Automatic or Manual Shift)	1	Transgo
		OIL SEALING RINGS		
	K28902	Ring Kit, [Aluminum Powerglide] 1962-73	1	
	K28902HP	Ring Kit, [Aluminum Powerglide] (Hi-Performance Red) (Includes: 1-Metal & 4-Teflon)	1	
177	5301A	Ring, [Aluminum Powerglide] (Input Shaft) 1962-73	2	3817715
179	8200	Ring, [Aluminum Powerglide] (High Clutch) 1962-73 (*Also Fits Governor Support)	2	3689808
189	8200	Ring, [Aluminum Powerglide] (Governor Support) 1962-73	2	
195	18608A	Ring, [Aluminum Powerglide] (Low Servo)	1	3789084
		WASHERS & BEARINGS		
	K28903	Kit, Thrust Washer, [Aluminum Powerglide] 1962-73	1	
211	28406B	Washer, [Aluminum Powerglide] (Stator to High Drum) (.061") 1962-73	1	
211	8406C	Washer, [Aluminum Powerglide] (Stator to High Drum) (.078") 1962-73	1	
211	28406C	Washer, [Aluminum Powerglide] (Stator to High Drum) (.078") 1962-73	1	Sonnax

ALUMINUM POWERGLIDE

211	8406E	Washer, [Aluminum Powerglide] (Stator to High Drum) (.092") 1962-73	1	
211	8406D	Washer, [Aluminum Powerglide] (Stator to High Drum) (.106") 1962-73	1	
235	8303B	Washer, [Aluminum Powerglide] (High Clutch Hub to Rear Sun Gear) 1962-73	1	
247	38208	Washer, [Aluminum Powerglide] (Sun Gear to Planet) (Bronze) 1962-73	1	Sonnax
247	28321	Bearing, [Aluminum Powerglide] (Sun Gear to Planet) 1962-73	1	Sonnax
251	28438-01K	Bearing, [Aluminum Powerglide] (Planet to Case) 1962-73	1	Sonnax
		GASKETS & RUBBER COMPONENTS		
300	3758	Gasket, [Aluminum Powerglide] (Pan) 1962-73	1	3789148
300	3758D	Gasket, [Aluminum Powerglide] (Pan, Fiber) 1962-73 (Duraprene)	1	
306	3770	Gasket, [Aluminum Powerglide] (Governor Cover)	1	
307	3763	Gasket, [Aluminum Powerglide] (Low Servo)	1	3789086
309	13268A	Gasket, [Aluminum Powerglide] (Pump Bolt)	7	
310	3762	Gasket, [Aluminum Powerglide] (Front Pump)	1	3789022
311	3808	O-Ring, [Aluminum Powerglide] (Front Pump)	1	
326	3759	Gasket, [Aluminum Powerglide] (Filter)	1	3795990
327	3543	Gasket, [Aluminum Powerglide] (Modulator)	1	6257218
332	3807	Lip Seal, [Aluminum Powerglide] (High Drum) (Inner) (3.06"OD)	1	
333	3107	Lip Seal, [Aluminum Powerglide] (High Drum) (Outer)	1	
338	3773	Lip Seal, [Aluminum Powerglide] (Reverse Piston) (Inner)	1	
339	3774	Lip Seal, [Aluminum Powerglide] (Reverse Piston) (Outer)	1	
348	3760	O-Ring, [Aluminum Powerglide] (Extension Housing to Case)	1	
359	3764	O-Ring, [Aluminum Powerglide] (Low Servo)	1	
368	3410	O-Ring, [Aluminum Powerglide] (Speed-O Sleeve) (Inner)	2	10054241
371	3291	O-Ring, [Aluminum Powerglide] (Filler Tube)	1	6264902
		ELECTRICAL COMPONENTS		
416	35602	Switch, [Aluminum Powerglide] (Spark Comtrol) (3-Prong)	1	3996287
		HARD PARTS		
500	28154	Pump, [Aluminum Powerglide] (Complete) (Water Cooled)	1	
500	28155	Pump, [Aluminum Powerglide] (Complete) (Air Cooled)	1	
510	28154A	Pump Body, [Aluminum Powerglide] (With Gears)	1	
520	28154B	Stator, [Aluminum Powerglide] (Pump Cover)	1	
529	28154S	Stator Tube, [Aluminum Powerglide]	1	
530	K28201	Pump Gear Set, [Aluminum Powerglide] (Front Pump)	1	
530	K28201X	Pump Gear Set, [Aluminum Powerglide] (.560" Thick) (.030"OD) (Oversized)	1	
531	8864A	Pump Gear Set, [Aluminum Powerglide] (Rear Pump)	1	
543	8434	Flange Pin, [Aluminum Powerglide] (Rear Pump Drive Gear Flange Pin)	1	
555	28755	Drum, [Aluminum Powerglide] (High Clutch) (4 or 5 Clutch)	1	
555	28755-01K	Drum Kit, [Aluminum Powerglide] (High Clutch) (Complete With Clutch)	1	Sonnax
575	28304	Hub, [Aluminum Powerglide] (High Clutch) (5 Clutch) (Carbon Steel) (*Light Weight With Holes for Drag Racing)	1	Sonnax
575	28304-SP	Hub, [Aluminum Powerglide] (High Clutch) (5 Clutch) (Carbon Steel) (*No Holes for Drag Racing)	1	Sonnax
584	28922	Planet, [Aluminum Powerglide] (1.82 Ratio) (23 Teeth Sun Gear)	1	
584	28921	Planet, [Aluminum Powerglide] (1.76 Ratio) (26 Teeth Sun Gear)	1	
		PLANETARY COMPONENTS		
	8415A	Washer, [Aluminum Powerglide] (1.82 Planet Pinion) (Front)	3	Sonnax

ALUMINUM POWERGLIDE

	8415AK	Washer Kit, [Aluminum Powerglide] (1.82 Planet Pinion) (Front)	1	Sonnax
	8413	Needle Bearing Kit, [Aluminum Powerglide] (1.82 Planet Pinion)	1	Sonnax
	8415	Washer, [Aluminum Powerglide] (1.76 Planet Pinion) (Front)	3	Sonnax
	8415BK	Washer Kit, [Aluminum Powerglide] (1.76 Planet) (Front)	1	Sonnax
	28435K	Pin Kit, [Aluminum Powerglide] (1.76 Planet) (Contains: Pins, Washers, Bolts) (6-each)	1	Sonnax
	28413	Needle Bearing Kit, [Aluminum Powerglide] (1.76 Planet Pinion)	1	Sonnax
	K28414	Spacer Kit, [Aluminum Powerglide] (Pinion Bearing Spacers) (3-Thick & 12-Thin Spacers)	1	Sonnax
	8415B	Washer, [Aluminum Powerglide] (1.76 Planet Pinion) (Rear)	6	Sonnax
		HARD PARTS (Continued)		
594	28931	Ring Gear, [Aluminum Powerglide] (Rear) (1.82 Ratio)	1	
594	28932	Ring Gear, [Aluminum Powerglide] (Rear) (1.76 Ratio)	1	
614	28302	Sun Gear W/Hub, [Aluminum Powerglide] (Rear) (23 Teeth) (1.82 Ratio)	1	
614	28302A	Sun Gear W/Hub, [Aluminum Powerglide] (Rear) (26 Teeth) (1.76 Ratio)	1	
634	28858	Rear Pump/Support, [Aluminum Powerglide] (With Gears) 1962-66	1	
634	28859	Support, [Aluminum Powerglide] (Output Shaft) (5”OD) (Cast Iron)	1	
670	28751	Shaft, [Aluminum Powerglide] (Input) (17-Spline) (12-5/8” Long) (*Fits 1.76 Ratio)	1	
670	28751S	Shaft, [Aluminum Powerglide] (Input) (17-Spline) (Hi-Performance) (12-5/8” Long) (*Fits 1.76 Ratio)	1	
670	28752	Shaft, [Aluminum Powerglide] (Input) (17-Spline) (12-7/8”Long) (*Fits 1.82 Ratio)	1	
670	28752HD	Shaft, [Aluminum Powerglide] (Input) (30-Spline) (Hi-Performance) (*Fits Both 1.76 and 1.82 Ratio)	1	
670	28752X	Shaft, [Aliminum Powerglide] (Input) (17-Spline) (Hi-Performance) (*Fits Both 1.76 and 1.82 Ratio)	1	
680	28850	Governor, [Aluminum Powerglide]	1	
740	28999	Valve Body, [Aluminum Powerglide] (Has Round Hole In Top Plate)	1	
740	28999A	Valve Body, [Aluminum Powerglide] (Has Square Hole In Top Plate)	1	
760	28710	Case, [Aluminum Powerglide] (Cheverolet Water Cooled) (No Rear Pump)	1	
765	28801	Pan, [Aluminum Powerglide]	1	
770	28715A	Extension Housing, [Aluminum Powerglide] (6” Long) (Aluminum)	1	
770	28715B	Extension Housing, [Aluminum Powerglide] (9” Long)	1	
770	28715A	Extension Housing, [Aluminum Powerglide] (11-3/8” Long)	1	
854	28501	Wave Plate, [Aluminum Powerglide] (Reverse Clutch)	1	
907	28821-02K	Piston Kit, [Aluminum Powerglide] (Servo) (Hi-Performance) (Includes: Dual Teflon Ring Piston, Rings, Gasket)	1	Sonnax
907	28821-08K	Servo Assembly, [Aluminum Powerglide] (Hi-Performance) (Includes: Dual Teflon Ring Piston, Rings, Gaskets & Cover)	1	Sonnax
907	28821-01K	Piston Kit, [Aluminum Powerglide] (Servo) (Hi-Performance) (Includes: Dual Viton Ring Piston, Rings & Gasket)	1	Sonnax
907	28821-07K	Servo Assembly, [Aluminum Powerglide] (Hi-Performance) (Includes: Dual Viton Ring Piston, Rings, Gaskets & Cover)	1	Sonnax
908	28106	Pin, [Aluminum Powerglide] (Servo)	1	Sonnax
909	28821-06K	Servo Cover Kit, [Aluminum Powerglide] (Includes: Cover, Gasket & O-Ring)	1	Sonnax
916	28107	Strut, [Aluminum Powerglide] (Band) (Servo Side)	1	Sonnax
916	28612-01K	Strut, [Aluminum Powerglide] (Band) (Adjustment Side) (Wedge)	1	Sonnax
965	28765	Piston, [Aluminum Powerglide] (High Clutch) (4 Clutch)	1	
965	28765A	Piston, [Aluminum Powerglide] (High Clutch) (5 Clutch)	1	
966	28761	Piston, [Aluminum Powerglide] (Reverse Clutch) (4 Clutch)	1	
966	28761A	Piston, [Aluminum Powerglide] (Reverse Clutch) (6 Clutch)	1	

ALUMINUM POWERGLIDE

975	28320	Spring Set, [Aluminum Powerglide] (High Clutch Return) (24-Springs)	1	Sonnax
976	28320A	Spring Kit, [Aluminum Powerglide] (Reverse Clutch Return) (17-Per Kit)	1	Sonnax
985	28755-02	Retainer, [Aluminum Powerglide] (High Clutch)	1	
986	28709	Retainer, [Aluminum Powerglide] (Reverse Clutch Spring)	1	Sonnax
991	28684	Rooster Comb, [Aluminum Powerglide] (With Park Rod)	1	
991	28617	TV Linkage, [Aluminum Powerglide] (Internal)	1	
992	28431-06	Shift Lever, [Aluminum Powerglide] (Floor Shift)	1	Sonnax
992	28431-05K	Shift Lever, [Aluminum Powerglide] (Bolt Together 4-Hole)	1	Sonnax
992	28431	Shift Lever, [Aluminum Powerglide] (Column Shift) (Welded)	1	
995	28109	Park Pawl, [Aluminum Powerglide]	1	
995	28115	Pin, [Aluminum Powerglide] (Park Pawl Pivot)	1	
995	28113	Spring, [Aluminum Powerglide] (Park Pawl Return)	1	
997	28685	TV Lever, [Aluminum Powerglide] (External) (Welded Type)	1	

TH300 Super Turbine 300

ILL#	PART#	DESCRIPTION	QTY	REF #
		OVERHAUL KIT		
	K38900	Overhaul Kit, [ST300] 1964-69	1	
		MASTER L/STEEL KIT		
	DK3800-S	Master L/Steel Kit, [ST300] 1964-69	1	
		MASTER W/STEEL KIT		
	DK3800	Master W/Steel Kit, [ST300] 1964-69	1	
		FILTER		
010	38661	Filter, [ST300] 1964-69	1	1374649
		FILTER KIT		
	FK38661	Filter Kit, [ST300] 1964-69	1	
		BANDS		
022	8314A	Band, [ST300] (1-7/8” Wide) 1964-69	1	3883918
022	8314AR	Band, [ST300] (Hi-Performance) (Red Lining) (1-7/8” Wide)	1	
		BUSHINGS		
	K38901	Bushing Kit, [ST300] 1964-69	1	
034	8005	Bushing, [ST300] (Pump Body) 1964-69	1	8623940
036	35007	Bushing, [ST300] (Stator) (Front) (*Also Low Sun Gear) 1964-69	2	1381366
046	28005	Bushing, [ST300] (High Clutch Drum) 1964-69	1	3840760
062	8004	Bushing, [ST300] (Output Shaft) (Front) (Pilot) 1964-69	1	3789034
064	38003A	Bushing, [ST300] (Case) 1964-69	1	1367730
066	8008	Bushing, [ST300] (Extension Housing) (Babbitt) 1964-69	1	6260048
066	38004	Bushing, [ST300] (Extension Housing) (Bronze) 1964-69	1	
		METAL CLAD SEALS		
070	38151	Seal, [ST300] (Front) 1964-69	1	8641826
072	38511	Seal, [ST300] (Linkage Shaft) 1964-69	1	8623056
074	8850B	Seal, [ST300] (Rear) (With Flange, Without Boot) 1964-69	1	1243402
074	16695ES	Seal, [ST300] (Rear) (With Flange, With Short Boot) 1964-69	1	
		FRICTION CLUTCH		
106	38210	Friction, [ST300] (High Clutch) (.098”) 1964-69	5	3779904
106	18305CHP	Friction, [ST300] (High Clutch) (.062”) (Hi-Performance) 1964-69	AR	
106	18305BHP	Friction, [ST300] (High Clutch) (.098”) (Hi-Performance Red) 1964-69	5	
106	K18305BHP	Friction Kit, [ST300] (High Clutch) (.098”) (Hi-Performance) (5-Per Kit) 1964-69	1	
114	18506	Friction, [ST300] (Reverse Clutch) (.098”) 1964-69	5-6	8641512
114	18506HP	Friction, [ST300] (Reverse Clutch) (.098”) (Hi-Performance Red) 1964-69	5-6	
114	K18506HP	Friction Kit, [ST300] (Reverse Clutch) (.098”) (Hi-Performance) (5-Per Kit) 1964-69	1	
114	R18506HP	Friction, [ST300] (Low / Reverse Clutch) (.098”) (Stage 1) 1964-69	5-6	
	K38100HP	Friction Module, [ST300] (Hi-Performance Red) 1964-69	1	
	K38100	Friction Module, [ST300] 1964-69	1	
		STEEL CLUTCH		
126	18306B	Steel, [ST300] (High Clutch) (.070”) 1964-69	5	1366440
126	18306BK	Steel, [ST300] (High Clutch) (.070”) (Kolene) 1964-69	5	
130	18306C	Steel, [ST300] (Reverse Clutch) (.070”) 1964-69	6	3799210

130	18306CK	Steel, [ST300] (Reverse Clutch) (.070") (Kolene) 1964-69	6	
	K38110	Steel Module, [ST300] 1964-69	1	
		OIL SEALING RINGS		
	K38903	Ring Kit, [ST300] 1964-69	1	
177	22626	Ring, [ST300] (Input Shaft) (1.125"OD) (Metal) 1964-69	2-3	1942041
179	8200	Ring, [ST300] (High Drum) (Metal) 1964-69	2	3689808
199	38170	Ring, [ST300] (Low Servo Piston) (Metal) 1964-69	1	1372058
		WASHERS & BEARINGS		
211	38166	Washer, [ST300] (Pump to Drum) (.061") 1964-69	1	1356904
211	38166A	Washer, [ST300] (Pump to Drum) (.079") 1964-69	1	1356905
211	38166B	Washer, [ST300] (Pump to Drum) (.097") 1964-69	1	1356906
235	38207	Washer, [ST300] (Drum to Hub) 1964-66	1	1362027
235	38207A	Washer, [ST300] (Drum to Hub) 1967-69	1	1377665
241	38208	Washer, [ST300] (Sun Gear to Planet) (Bronze) 1964-69	1	Sonnax
		GASKETS & RUBBER COMPONENTS		
300	3897	Gasket, [ST300] (Bottom Pan) 1964-69	1	1376720
300	3897F	Gasket, [ST300] (Bottom Pan) 1964-69 (Fiber)	1	
306	3898	Gasket, [ST300] (Governor Cover) 1964-69	1	1359113
310	3878	Gasket, [ST300] (Pump) 1964-69	1	1374598
370	3291	O-Ring, [ST300] (Filler Tube) 1964-69	1	
		ELECTRICAL COMPONENTS		
414	34326A	Switch, [ST300] (Spark Control) (on Valve Body) 1964-65	1	1943623
414	38201B	Switch, [ST300] (Spark Control) (on Front Pump) 1964-69	1	1993390
434	38944	Solenoid, [ST300] (Kickdown) (Without Cruise Control) 1964-69	1	1993330
434	38943	Solenoid, [ST300] (Kickdown) (With Cruise Control) 1964-69	1	1993374
444	34329	Connector, [ST300] (Case) (1-Prong) 1964-69	1	24205373
444	34327A	Connector, [ST300] (Case) (2-Prong) 1964-67	1	
		HARD PARTS		
500	38979	Pump Assembly, [ST300] (Without Variable Pitch) (Without Down Shift Valve) 1964-67	1	
500	38979A	Pump Assembly, [ST300] (Without Variable Pitch) (With Down Shift Valve) 1964-67	1	
500	38978	Pump Assembly, [ST300] (With Variable Pitch) (With Solenoid) 1964-69	1	
500	38978A	Pump Assembly, [ST300] (With Variable Pitch) (Without Solenoid) 1964-69	1	
520	38168	Stator, [ST300] (Non-Variable Pitch) 1964-69	1	
520	38169	Stator, [ST300] (With Variable Pitch) 1964-67	1	
530	38153	Pump Gear Set, [ST300] (.625" Thick) 1964-69	1	
530	K35201	Pump Gear Set, [ST300] (.725" Thick) 1964-69	1	
555	38303	Drum, [ST300] (High Clutch) 1964-69	1	1361823
565	38760	Piston, [ST300] (High Clutch Drum) 1964-69	1	
566	38761	Piston, [ST300] (Reverse Clutch) 1964-69	1	
575	38304	Hub, [ST300] (High Clutch) 1964-69	1	1380015
584	38916	Planet, [ST300] (With 14-3/4" Output Shaft) 1964-69	1	1380232
584	38917	Planet, [ST300] (With 20" Output Shaft) 1964-69	1	1380229
594	38407	Ring Gear, [ST300] (Planet) 1964-69	1	1364348
614	38302	Sun Gear W/Flange, [ST300] (Planet) 1964-69	1	1364366
670	38421A	Input Shaft, [ST300] (2-Ring Type) (Non-Variable Pitch) 1964-69	1	1384601

TH300 Super Turbine 300

670	38421	Input Shaft, [ST300] (3-Ring Type) (With Variable Pitch) 1964-67	1	1378273
680	35410	Governor Assembly, [ST300] 1964-69	1	464200
740	38998	Valve Body, [ST300] (Non-Variable Pitch) 1964-69	1	
740	38999	Valve Body, [ST300] (With Variable Pitch) 1964-65	1	
760	38930	Case, [ST300] (Round Bell) 1964-69	1	
760	38930A	Case, [ST300] (Buick / Olds / Pontiac Bell) 1964-69	1	
765	38801	Pan, [ST300] (Bottom) 1964-69	1	
770	38759	Extension Housing, [ST300] (6” Long) (With 2” Speed-O Hole) 1964-69	1	

*Match ***SPEED-O GEAR*** Ratio to Chart*

	63360 / Tire Roll Out = Axle Speed
	Axle Speed x Diff. Ratio = Driveshaft Speed
	1000 / Driveshaft Speed = Speed-O Gear Ratio

		DRIVE GEAR								
	X	7	8	9	10	15	17	18	19	20
	18	0.388	0.444	0.500	0.555	0.833	0.944	1.00	1.05	1.11
	19	0.368	0.421	0.474	0.526	0.789	0.895	0.947	1.00	1.05
D	20	0.350	0.400	0.450	0.500	0.750	0.850	0.900	0.950	1.00
R	21	0.333	0.381	0.429	0.476	0.714	0.809	0.857	0.905	0.952
I	22	0.320	0.364	0.409	0.455	0.682	0.773	0.818	0.864	0.909
V	23	0.300	0.348	0.391	0.435	0.652	0.739	0.783	0.726	0.870
E	24	0.290	0.333	0.375	0.417	0.625	0.708	0.750	0.790	0.833
N	25	0.280	0.320	0.360	0.400	0.600	0.680	0.720	0.760	0.800
	34	0.210	0.235	0.265	0.294	0.441	0.500	0.529	0.559	0.588
G	35	0.200	0.229	0.257	0.286	0.429	0.486	0.514	0.543	0.571
E	36	0.194	0.222	0.250	0.278	0.417	0.472	0.500	0.528	0.555
A	37	0.189	0.216	0.243	0.270	0.405	0.459	0.486	0.514	0.541
R	38	0.184	0.211	0.237	0.263	0.395	0.447	0.474	0.500	0.526
	39	0.179	0.205	0.231	0.256	0.385	0.436	0.462	0.487	0.513
	40	0.175	0.200	0.225	0.250	0.375	0.425	0.450	0.475	0.500
	41	0.171	0.195	0.220	0.244	0.366	0.415	0.439	0.463	0.488
	42	0.167	0.191	0.214	0.238	0.357	0.405	0.429	0.452	0.476
	43	0.163	0.186	0.209	0.233	0.348	0.395	0.419	0.442	0.465
	44	0.159	0.182	0.205	0.227	0.341	0.386	0.409	0.431	0.455
	45	0.156	0.178	0.200	0.222	0.333	0.377	0.400	0.422	0.445

Notes:

General Motors Drive Speed-O Gears



Aluminum Powerglide / ST300 (Spline Type)

Tooth Count	Color	Part #	Reference #
7 Teeth	Blue	54897	6264073
8 Teeth	Natural	65808N	3708144
9 Teeth	Red	54899	6261796



400

Tooth Count	ID	Part #	Reference #
15 Teeth	1.380"ID	34227C	8629547
16 Teeth	1.380"ID	34227E	
17 Teeth	1.380"ID	34227F	
18 Teeth	1.380"ID	34227K	
19 Teeth	1.380"ID	34227J	
21 Teeth	1.380"ID	34227N	



Aluminum Powerglide / 180 / 180C / 250 / 350 / 700R4 (5/16" Wide Slot)

Tooth Count	Color	Part #	Reference #
7 Teeth	Pink	35227A	6271537
8 Teeth	Black	35227B	6261783
8 Teeth	Orange	35227C	12338033
9 Teeth	Green	35227T	6261782
10 Teeth	Purple	35227G	6261785
15 Teeth	Grey	77227G	8642620
17 Teeth	Red	77227R	8640517
18 Teeth	Blue	35227K	1246222
19 Teeth	Yellow	77227	8640519
20 Teeth	Brown	35227N	8640189



250 / 250C / 350 / 350C (7/16" Wide Slot)

Tooth Count	Color	Part #	Reference #
8 Teeth	Orange	35227Y	8640055
9 Teeth	Lt. Green	35227F	8640246
17 Teeth	Grey	35227H	6260038
18 Teeth	Green	35227J	6260037
19 Teeth	Natural	35227M	8640188



200 / 200C (1/2"Wide Slot)

Tooth Count	Color	Part #	Reference #
15 Teeth	Grey	65815G	8628794
17 Teeth	Red	65817R	8628793
18 Teeth	Blue	65818B	8628792
19 Teeth	Yellow	65819Y	8640188
20 Teeth	Brown	65820	8628894

General Motors Drive Speed-O Gears



125 / 125C / 325 / 325-4L / 440-T4

Tooth Count	Color	Part #	Reference #
9 Teeth	Yellow	75897	8632648
10 Teeth	Green	75896	8632646
12 Teeth	Red	65896	



4L30E

Tooth Count	Color	Part #	Reference #
7 Teeth	Yellow	54898	



400 / 700R4 / 4L60E

Tooth Count	ID	Part #	Reference #
40 Teeth	1.380"ID	34990	(400) 8655315
40 Teeth	1.190"ID	77990	(700 / 4L60E) 24202711



125C / 440-T4

Tooth Count	Color	Part #	Reference #
8 Teeth	Metal	75990A	8666642
11 Teeth	Metal	75990B	8666643
13 Teeth	Metal	75990C	8664478
14 Teeth	Metal	75990D	8666644
15 Teeth	Metal	75990E	8666645

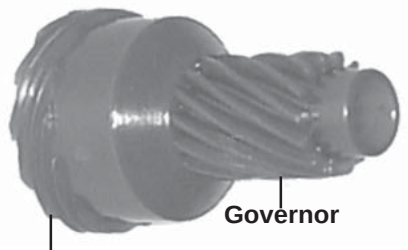

200-4R (Governor / Speed-O Gear)

Tooth Count	Color	Part #	Reference #
10 Teeth Speed-O	Green	K65412A	8639906
11 Teeth Speed-O	Orange	K65414	8634965
12 Teeth Speed-O	Red	K65413	8634935
13 Teeth Speed-O	Yellow	K65412	8634934
14 Teeth Speed-O	Natural	K65412B	

SPEEDO HOUSINGS AND CLIPS

TH200/C, 350/C CHEVROLET (BULLET)	35922	345215
TH200/C, 350/C BOP, 700-R4	35922A	25512340
TH125/C, 200-4R, 325/4L, 440-T4	84922	25524924
TH400 34-39 TOOTH	34922	1362294
TH400 40-45 TOOTH	34922A	1362293

CLIPS

LONG-THIN 350 / 700	35741	6261781
1/2" WIDE 200	65742	8628557
SHORT-WIDE. 350 / 700	35744	6261059

General Motors Driven Speed-O Gears

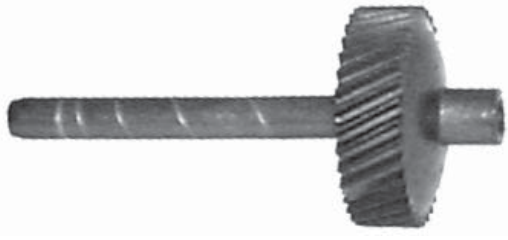

200 / 200C / 375 / 400 / 350 / 350C / 700R4

Tooth Count	Color	Part #	Reference #
34 Teeth	Green	31420	9774413
35 Teeth	Orange	31421	9780387
36 Teeth	White	31422	1359270
37 Teeth	Red	31423	1359271
38 Teeth	Blue	31424	1359272
39 Teeth	Brown	31425	1359273
40 Teeth	Black	31426	1362048
41 Teeth	Yellow	31427	1362195
42 Teeth	Green	31428	1362049
43 Teeth	Purple	31429	1362196
44 Teeth	Grey	31430	9780470
45 Teeth	Light Blue	31431	9775187



TH250 / 250C / 350 / 350C / 180 / 200 / 200C

Tooth Count	Color	Part #	Reference #
18 Teeth	Brown	31405	3987918
19 Teeth	White	31406	3987919
20 Teeth	Blue	31407	3987920
21 Teeth	Red	31408	3987921
22 Teeth	Grey	31409	3987922
23 Teeth	Black	31412	3860346
24 Teeth	Yellow	31413	3860347
25 Teeth	Orange	31415	3860348



125 / 325 / 325-4L / 200-4R / 440-T4

Tooth Count	Color	Part #	Reference #
27 Teeth	Black	75998E	410731
28 Teeth	Yellow	75998A	416765
29 Teeth	Green	75998B	403999
30 Teeth	Blue	75998C	561035
31 Teeth	White	75998D	403417



700R4 (Steel Shaft Type)

Tooth Count	Color	Part #	Reference #
35 Teeth	Orange	31421A	25513042
36 Teeth	White	31422A	25513043
37 Teeth	Peach	31423A	25513044
38 Teeth	Blue	31424A	25513045
39 Teeth	Brown	31425A	25513046
40 Teeth	Black	31426A	25513047
41 Teeth	Yellow	31427A	25513048
42 Teeth	Green	31428A	25513049
43 Teeth	Purple	31429A	25513050
44 Teeth	Grey	31430A	25513051
45 Teeth	Blue	31431A	25513052



440-T4 / 125C (Steel Shaft Type)

Tooth Count	Color	Part #	Reference #
27 Teeth	Black	75999A	
28 Teeth	Yellow	75999B	
29 Teeth	Dark Green	75999C	
30 Teeth	Lt. Green / Blue	75999D	

NOTES

FMX/SX/MX/HX/BW8/12

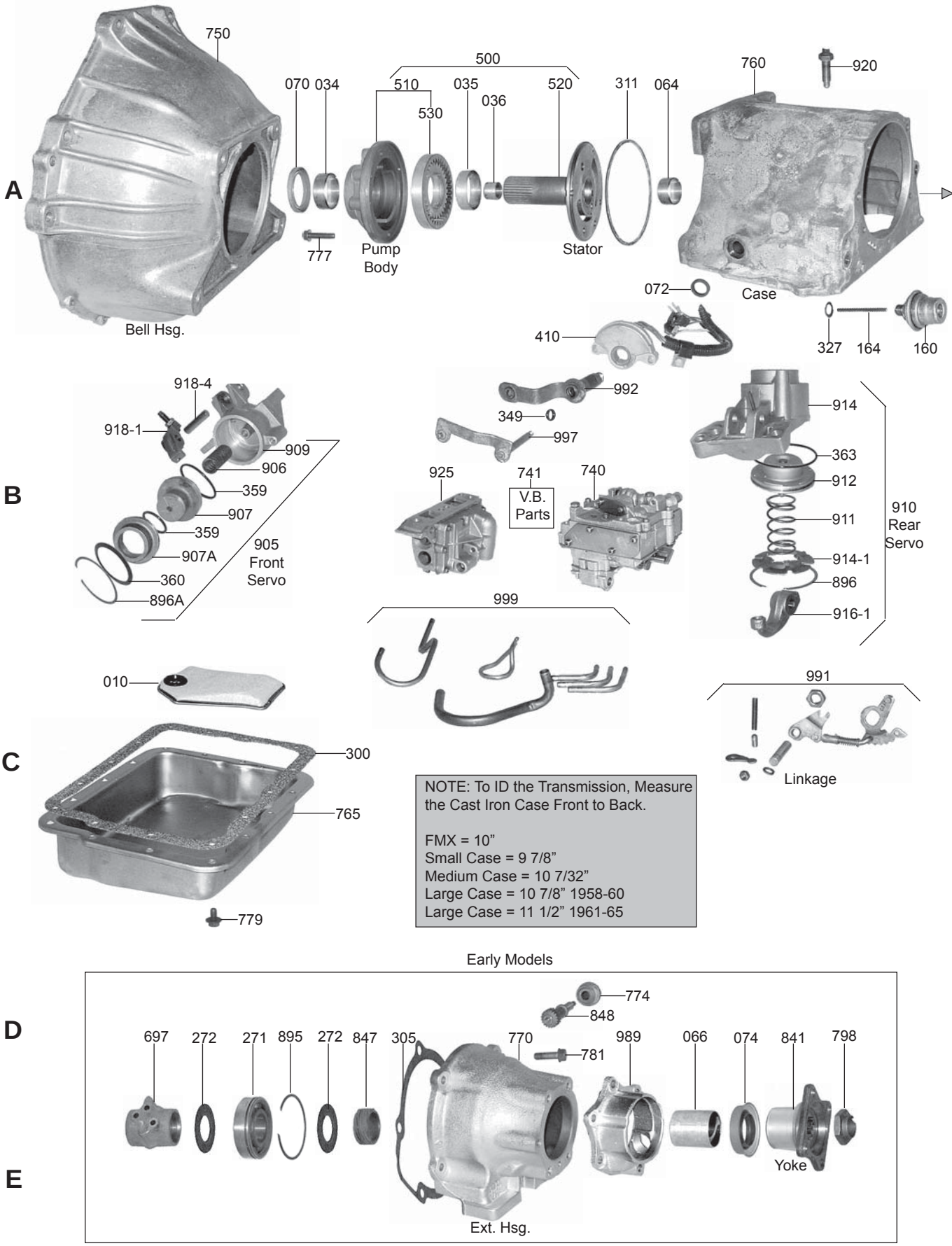

RWD 3 Speed

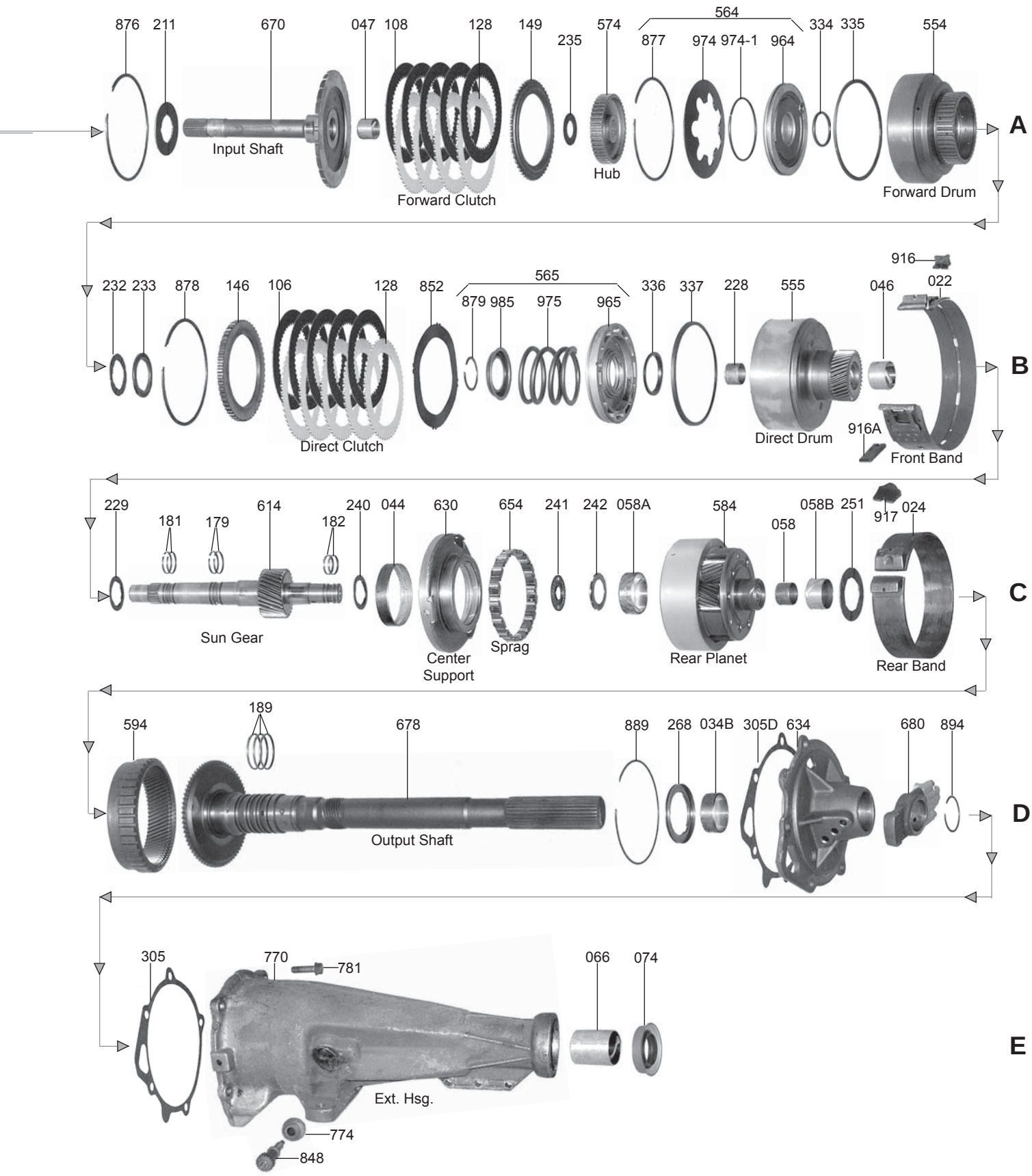
876
211
670
047
108
128
149
235
574
564
877
974
974-1
964
334
335
554
Input Shaft
Forward Clutch
Hub
Forward Drum
A
916
232
233
878
146
106
128
852
565
879
985
975
965
336
337
228
555
046
022
Direct Clutch
Direct Drum
916A
Front Band
B
229
181
179
614
182
240
044
630
654
241
242
058A
584
058
058B
251
917
024
Sun Gear
Center Support
Sprag
Rear Planet
Rear Band
C
189
594
678
889
268
034B
305D
634
680
894
Output Shaft
D
305
770
781
066
074
Ext. Hsg.
774
848
E

FMX/SX/MX/HX/BW8/12

ILL#	PART#	DESCRIPTION	QTY	REF #
		PAPER & RUBBER KIT		
	K6900-1	Paper & Rubber Kit, [FMX] 1968-81	1	
	K6900R-1	Paper & Rubber Kit, [BW 8-12] 1956-74	1	
	K6900D-1	Paper & Rubber Kit, [FMX] (Small Case) 1951-67	1	
	K6900E-1	Paper & Rubber Kit, [FMX] (Medium Case) 1955-71	1	
	K6900F-1A	Paper & Rubber Kit, [FMX] (Large Case) 1958-60	1	
	K6900P-1	Paper & Rubber Kit, [FMX] (Large Case) 1961-65	1	
		OVERHAUL KITS		
	K6900M	Overhaul Kit, [FMX] 1968-81	1	
	K6900R	Overhaul Kit, [BW 8-12] 1967-74	1	
	K6900D	Overhaul Kit, [FMX] (Small Case) 1951-67	1	
	K6900E	Overhaul Kit, [FMX] (Medium Case) 1955-67	1	
	K6900MX	Overhaul Kit, [FMX] (Medium Case) 1968-Up	1	
	K6900F	Overhaul Kit, [FMX] (Large Case) 1958-60	1	
	K6900P	Overhaul Kit, [FMX] (Large Case) 1961-65	1	
		MASTER L/STEEL KIT		
	DK600F-S	Master L/Steels Kit, [FMX] 1968-79	1	
	DK600R-S	Master L/Steels Kit, [BW 8-12] 1967-74	1	
	DK600-S	Master L/Steels Kit, [FMX] (Small Case) 1951-67	1	
	DK600A-S	Master L/Steels Kit, [FMX] (Medium Case) 1955-67	1	
	DK600MX-S	Master L/Steels Kit, [FMX] (Medium Case) 1968-71	1	
	DK6900D-S	Master L/Steels Kit, [FMX] (Large Case) 1958-65	1	
		MASTER W/STEEL KIT		
	DK600F	Master W/Steels Kit, [FMX] 1968-79	1	
	DK600R	Master W/Steels Kit, [BW 8-12] 1967-74	1	
	DK600	Master W/Steels Kit, [FMX] (Small Case) 1951-67	1	
	DK600A	Master W/Steels Kit, [FMX] (Medium Case) 1955-67	1	
	DK600MX	Master W/Steels Kit, [FMX] (Medium Case) 1968-71	1	
	DK600D	Master W/Steels Kit, [FMX] (Large Case) 1958-65	1	
		FILTER		
010	6582F	Filter, [FMX] (Felt) 1968-79	1	D8AZ-7A098-A
010	6582D	Filter, [FMX] (Brass) 1968-79	1	DOAZ-7A098-A
010	6582H	Filter, [BW 8-12] 1967-74	1	3186706
010	6582C	Filter, [FMX] (Small Case) 1951-67 (Brass) (With 2-Holes & 2-Indentions in the Brass, 1-by Each Hole)	1	
010	6582A	Filter, [FMX] (Medium Case) 1955-71 (Brass) (With 2-Holes & 1-Indention by the Large Hole)	1	B9MP-7A089-B
		FILTER KIT		
	FK6582F	Filter Kit, [FMX] (Felt) 1968-79	1	
	FK6582D	Filter Kit, [FMX] (Brass) 1968-79	1	
	FK6582H	Filter Kit, [BW 8-12] 1967-74	1	

	FK6582C	Filter Kit, [FMX] (Small Case) 1951-67	1	
	FK6582A	Filter Kit, [FMX] (Medium Case) 1955-71	1	
		BANDS		
022	6313X	Band, [FMX] (Front) (Flex) 1968-79	1	D7AZ-7A162-A
022	6313P	Band, [FMX] (Front) (Solid) 1968-73 (Center Lug 1-15/16") (Medium Case) 1967-70	1	D2AZ-7A162-A
022	6313C	Band, [FMX] (Front) (Center Lug) (1-15/16" Wide) (Medium Case) 1955-56	1	C2AZ-7A162-A
022	6313E	Band, [FMX] (Front) (Off Set Lug) (Thick Lining) (1-15/16" Wide) (Small Case) 1951-66	1	C2AZ-7A162-B
022	6313D	Band, [FMX] (Front) (1.625" Wide) (Small Case) 1951-66	1	B6AZ-7A162-A
022	6313N	Band, [FMX] (Front) (Off Set Lug) (Paper Lining) (Small Case) 1967	1	C7AZ-7A162-A
022	K6313S	Band, [FMX] (Front) (Slip-In or Snap) 1968-79	1	
024	6362A	Band, [FMX] (Small & Medium Case) (Rear) 1955-79	1	B5SZ-7A163-B
024	6362	Band, [FMX] (Small Case) (Rear) (1-5/8" Wide) 1951-55	1	
024	6362B	Band, [FMX] (Large Case) (Rear) (1-15/16" Wide) 1958-60	1	
024	6362C	Band, [FMX] (Large Case) (Rear) 1961-65	1	
		BUSHINGS		
	K6902M	Bushing Kit, [FMX] 1968-79	1	
034	36002B	Bushing, [FMX] (Small & Medium Case) (Pump Body) (Babbit) 1968-79	1	
034	36002	Bushing, [FMX] (Small & Medium Case) (Pump Body) (Bronze) 1968-79	1	
034	6010	Bushing, [FMX] (Small, Medium, & Large Case) (Pump Body) 1951-67	1	
034	6015	Bushing, [FMX] (Small, Medium) (Rear Pump) 1951-Up	1	B5AZ-7B260-A
035	6011	Bushing, [FMX] (Small & Medium Case) (Pump Gear) 1951-Up	1	
036	6017D	Bushing, [FMX] (Stator) (Front) (29-Spline) 1968-79	1	
036	6009	Bushing, [FMX] (Small Case) (Stator) (17-Spline) 1951-59	1	
036	6017	Bushing, [FMX] (Small & Medium Case) (Stator) (29-Spline) 1959-Up	1	
036	6017A	Bushing, [FMX] (Large Case) (Stator) 1955-65	1	
046	6003	Bushing, [FMX] (Small Case) (Direct Drum) 1951-79	1	B1AZ-7B262-2
047	6008	Bushing, [FMX] (Small Case) (Input Shaft) 1951-79	1	B1AZ-7B120-A
058	6004	Bushing, [FMX] (Small Case) (Planet) (Inner, Rear) 1951-79	1	B1AZ-7B257-B
058	6019	Bushing, [FMX] (Small Case) (Planet) (Outer) 1955-79 (Medium Case) 1955-69	1	B5AZ-7B256-A
064	6016	Bushing, [FMX] (Small Case) (Front) 1968-79 (Medium Case) 1955-71	1	B5AZ-7B025-A
066	6023	Bushing, [FMX] (Small Case) (Extension Housing) 1955-79 (Large Case) 1958-60	1	
		METAL CLAD SEALS		
070	16601A	Seal, [FMX] (Medium Case) (Front Pump) (Without Flange) 1968-Up	1	C2AZ-7A248-A
070	6550C	Seal, [FMX] (Small, Medium & Large Case) (Front Pump) 1951-67	1	C3AZ-7A248-A
072	6507A	Seal, [FMX] (Small, Medium, & Large Case) (Linkage Shaft) 1951-79	1	D5AZ-7B498-A
074	34743C	Seal, [FMX] (Small, Medium, & Large Case) (Some) (Rear Without Boot)	1	D5AZ-7B052-A
074	16695C	Seal, [FMX] (Small, Medium, & Large Case) (Some) (Rear With Boot)	1	
074	6557L	Seal, [FMX] (Small, Medium, & Large Case) (Some) (Rear) (3.066"OD) (With Bolt-on Yoke)	1	
074	16695ES	Seal, [FMX] (Small, Medium Case) (Some) (Rear) (Small With Short Boot)	1	
074	6557G	Seal, [FMX] (Large Case) (Lincoln & Continental) 1961-65	1	C1VP-7052A
		FRICTION CLUTCH		
106	6221F	Friction, [FMX] (Cruiso) (Direct Clutch) (.095") 1951-66	5	C2AP-7B164-A
106	6221G	Friction, [FMX] (Direct Clutch) (.079") 1967-79	5	C8AZ-7B164-G
108	6204M	Friction, [FMX] (Forward Clutch) (.058") (Waffle) 1951-79	5	C9AZ-7B164-A
108	6204P	Friction, [FMX] (Forward Clutch) (.088") 1967-79	5	C9AZ-7B164-B

108	6204N	Friction, [FMX] (Forward Clutch) (.073") 1967-79	5	C9AZ-7B164-C
		STEEL CLUTCH		
128	6205	Steel, [FMX] (Forward/Direct Clutch) (Flat) (.068") 1968-79	7-8	C8AZ-7B442-A
128	6222	Steel, [FMX] (Small Case) (Direct Clutch) (Dished) (.067") 1951-74	4-6	
128	6222B	Steel, [FMX] (Small, Medium Case) (Direct Clutch) (.092") 1963-68	4-6	C2AZ-7B442-A
		MODULATORS		
160	6834	Modulator, [FMX] (Green Stripe) (Single Line) 1975-79	1	D5AZ-7A377-A
160	16525D	Modulator, [FMX] (Blue Stripe) (Single Line) 1961-79	1	
160	6831	Modulator, [FMX] (Black Stripe) (Dual Line) (351 Engine)	1	
160	6832	Modulator, [FMX] (Orange Stripe) (Dual Line)	1	FD30A
	13266	Hose, Modulator [FMX] (Elbow)	1	C1AZ-7B087-E
164	T162B	Pin, [FMX] (Modulator Adjustment) (*For All Ford Transmissions)	1	Teckpak
		VALVE BODY KITS		
	K6253C	Shift Kit, [FMX] 1967-73 (Medium Case 1967-72) (Large Case 1961-65)	1	Transgo
	K6253D	Shift Kit, [FMX] 1973-79	1	Transgo
	K6253B	Shift Kit, [FMX] (Small & Medium Case) 1964-66	1	Transgo
	37-1	Reprogramming Kit, [FMX] (Competition) (Medium Case) 1961-72	1	Transgo
	33-1	Reprogramming Kit, [FMX] (Competition) 1973-79	1	Transgo
	FMX-3	Reprogramming Kit, [FMX] (Competition) (Stick Shift) 1967-Up	1	Transgo
		OIL SEALING RINGS		
	K6909C	Ring Kit, [FMX] 1968-79	1	
	K6909D	Ring Kit, [BW 8-12] 1967-74	1	
	K6909	Ring Kit, [FMX] (Small Case) 1951-67	1	
	K6909A	Ring Kit, [FMX] (Medium Case) 1955-69	1	
	K6909B	Ring Kit, [FMX] (Large Case) (4-Rings Only) 1958-65	1	
179	6231	Ring, [FMX] (Small Case) (Sun Gear) (Center) 1951-79	2	COAZ-7C169-A
181	6230A	Ring, [FMX] (Medium Case) (Sun Gear) (Front) 1955-70	2	1P-77542-A
181	6230	Ring, [FMX] (Small Case) (Sun Gear) (Front) 1951-79	2	B5SZ-77542-A
182	6235	Ring, [FMX] (Small & Medium Case) (Sun Gear) (Rear) 1951-79 (Large Case 1958-65)	2	1P-77543-B
189	36401	Ring, [FMX] (Governor) 1968-79	4	
		WASHERS & BEARINGS		
211	6201B	Washer, [FMX] (Input Shaft to Stator) (Small Case 1959-79) (Medium Case 1955-70)	1	
228	6002	Caged Bearing, [FMX] (Inside Direct Drum) (Small Case) 1953-79	1	C8AZ-7D480A
229	6232	Washer, [FMX] (Direct Drum to Sun Gear) (Small Case) 1951-79	1	
232	6223	Washer, [FMX] (Forward Drum to Direct Drum) (Small Case) (Bronze) 1951-79	1	
233	6224	Race, [FMX] (Forward Drum to Direct Drum) (Small Case) (Steel) 1951-79	1	
235	6203A	Washer, [FMX] (Input Shaft to Forward Hub) (Small Case) (Fiber) 1951-79 (Medium Case 1955-70)	1	
241	6259X	Thrust Bearing, [FMX] (Sun Gear to Planet) (Small Case 1959-79) (Medium Case 1959-70)	1	
251	6237H	Washer, [FMX] (Planet to Output Shaft) (.062") (Medium Case) 1955-63	1	
251	6273I	Washer, [FMX] (Planet to Output Shaft) (.068") (Medium Case) 1955-63	1	
251	6273J	Washer, [FMX] (Planet to Output Shaft) (.075") (Medium Case) 1955-63	1	
251	6273K	Washer, [FMX] (Planet to Output Shaft) (.082") (Medium Case) 1955-63	1	
268	6240E	Bearing W/Race, [FMX] (Output Shaft to Support) (Medium Case) 1968-70	1	

		GASKETS & RUBBER COMPONENTS		
300	3565	Gasket, [FMX] (Small Case) (Bottom Pan) (Cork) 1951-79	1	B5AZ-7A191-A
300	3565**D** or **F**	Gasket, [FMX] (Small Case) (Bottom Pan) (Fiber) 1951-79 **(*Duraprene** or **Farpack)**	1	
300	3610	Gasket, [FMX] (Medium Case) (Bottom Pan) (Cork) 1955-70	1	B5AZ-7A191-B
300	3830	Gasket, [FMX] (Large Case) (Bottom Pan) 1958-60	1	
300	3741	Gasket, [FMX] (Large Case) (Bottom Pan) 1961-65	1	
305	13283A	Gasket, [FMX] (Extension Housing) 1968-79	1	D2AZ-7086-A
305	13298	Gasket, [BW 8-12] (Extension Housing) 1967-74	1	
305	3765	Gasket, [FMX] (Small Case) (Extension Housing to Rear Pump) 1951-Up	1	
305	13284	Gasket, [FMX] (Rear Pump to Case) 1968-79	1	
311	3666	O-Ring, [FMX] (Front Pump) (Small, Medium, & Large Case) 1951-Up	1	B1AZ-7A136-A
327	3386	Gasket, [FMX] (Small, Medium Case) (Modulator)	1	C2AP-7B426-A
334	3865	O-Ring, [FMX] (Forward Clutch) (Inner)	1	
335	13312	Lip Seal, [FMX] (Forward Clutch) (Outer)	1	
336	13286	Lip Seal, [FMX] (Direct Clutch) (Inner)	1	C8AZ-7E212-A
337	13285	Lip Seal, [FMX] (Direct Clutch) (Outer)	1	C8AZ-7C051-A
349	3499	O-Ring, [FMX] (Throttle Shaft)	1	386078-S
371	3291	O-Ring, [FMX] (Filler Tube)	1	6264902
		HARD PARTS		
500	6551L	Pump, [FMX] (29-Spline Input Shaft) 1968-81	1	C8AZ-7A103-A
500	6551A	Pump, [FMX] (17-Splines Input Shaft) (Small Case) 1951-59	1	
500	6551D	Pump, [FMX] (Medium Case) 1955-67	1	
520	6552E	Stator, [FMX] (29-Spline Input Shaft) 1968-79 (Medium Case 1968-71)	1	
520	6552B	Stator, [FMX] (Small Case 1959-67) (Medium Case 1955-67)	1	
530	K36201	Pump Gears, [FMX] 1968-79	1	
554	6211H	Drum, [FMX] (Forward Clutch) (Front) (27 Teeth Forward Steels) 1968-Up	1	
554	6211J	Drum, [FMX] (Medium Case) (Forward Clutch) (Front) (55 Teeth Forward Steels) 1955-60	1	
555	6229L	Drum, [FMX] (Direct Clutch) (Rear With Sun Gear) (Has 27-Lugs In Drum Where Steels Ride)	1	C9AZ-7A626-A
555	6229H	Drum, [FMX] (Medium Case) (Direct Clutch) (Rear With Sun Gear) (Has 55-Lugs In Drum Where Steels Ride) 1955-62	13	
574	6207D	Hub, [FMX] (Forward Clutch)	1	
584	6236S	Planet, [FMX] 1968-79	1	C3AZ-7A398-C
584	6236J	Planet, [FMX] (Small Case) (Smooth Race) 1958-62	1	
614	6233J	Sun Gear, [FMX] (30 Teeth) (10-1/4" Long)	1	
634	6724	Output Shaft Support, (FMX) 1963-79	1	
		SPRAGS & ONE WAY CLUTCHES		
654	6239G	Sprag, [FMX] (Low Clutch Roller) (Rear)	1	
		HARD PARTS (Continued)		
680	6242C	Governor, [FMX]	1	
	6242CS	Spring, [FMX] (Governor Return Spring)	1	D2AZ-7C063-A
740	6956	Valve Body, [FMX] 1968-79	1	
750	6770A	Bell Housing, [FMX] (Small Case) (Small Block) (No Cable Mount)	1	
750	6770B	Bell Housing, [FMX] (Small Block) (With Shift Cable Mount)	1	
750	6770D	Bell Housing, [FMX] (Small Case) (Big Block) (No Cable Mount)	1	

750	6770C	Bell Housing, [FMX] (Big Block) (With Shift Cable Mount)	1	
750	6770E	Bell Housing, [FMX] (Small Case) (390 Round Bell Style)	1	
760	6667	Case, [FMX] (10” Long) 1968-76	1	
760	6667A	Case, [FMX] (10” Long) 1977-Up	1	
765	6999	Pan, [FMX] (Filler Tube In Case) 1968-81	1	
770	6670A	Extension Housing, [FMX] (2WD) (13”) (*Uses 5-Short Bolts) 1968-79	1	
770	6670B	Extension Housing, [FMX] (16-1/4”) (*Uses 5-Short Bolts) 1968-79	1	
964	6210E	Piston, [FMX] (Forward Clutch) (Cast # RF-DOAP)	1	
974	6208C	Spring, [FMX] (Front Clutch Spring) (.073”) (Dished) 1968-81	1	C1AP-7B070-A

NOTES

C-4 / C-5

RWD 3 Speed

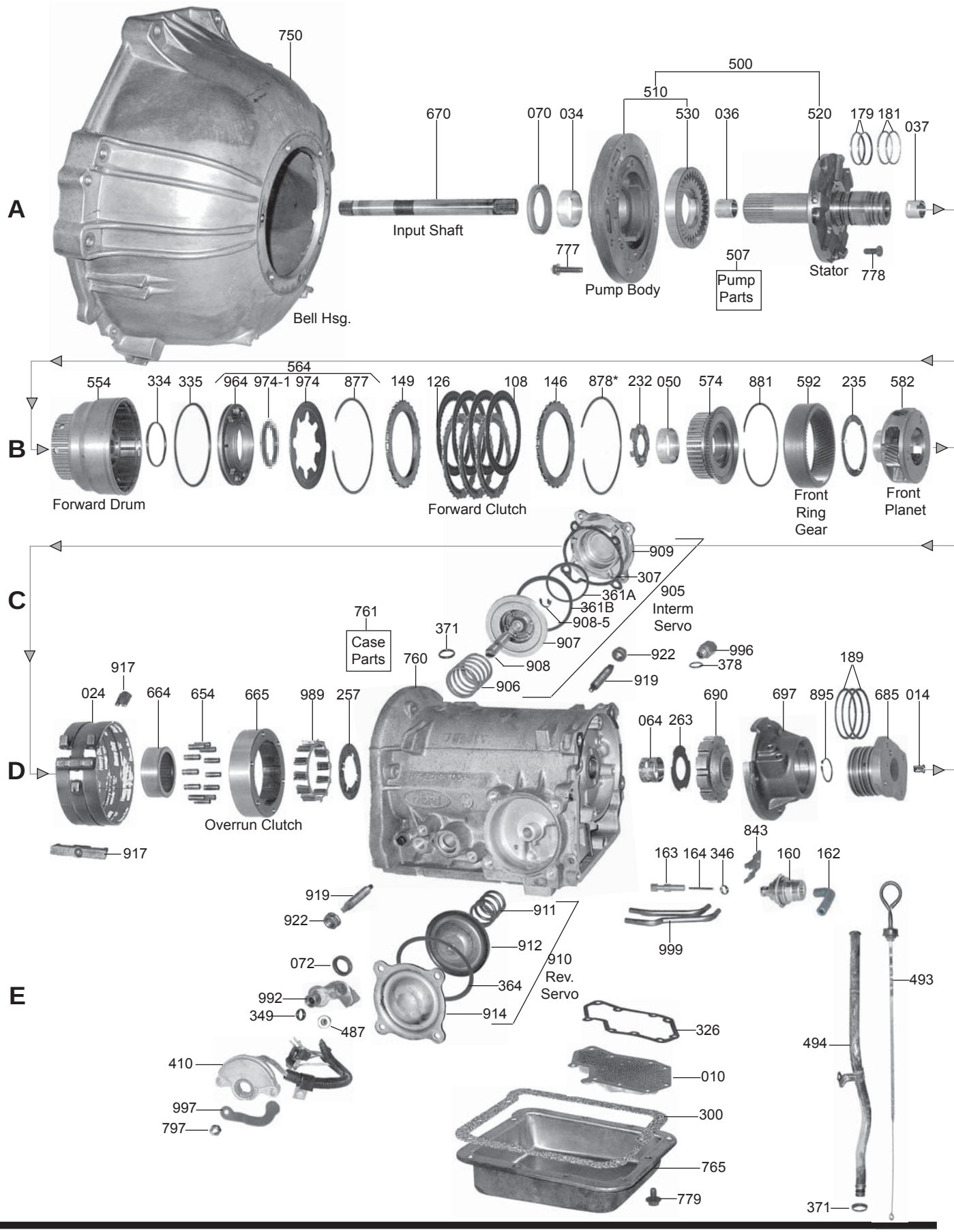

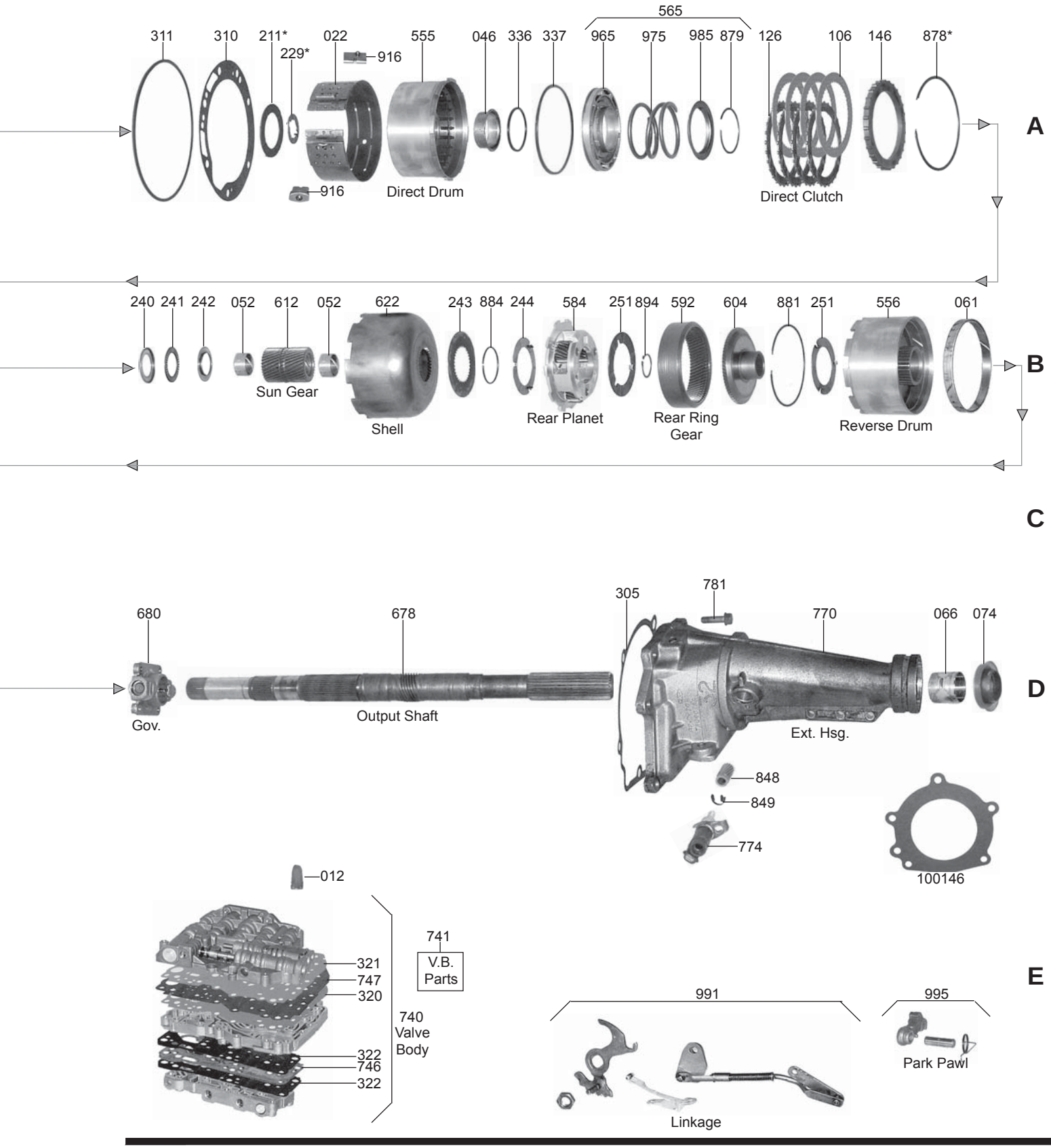
311
310
211*
229*
022
916
916
555
Direct Drum
046
336
337
565
965
975
985
879
126
Direct Clutch
106
146
878*
A
240
241
242
052
612
052
Sun Gear
622
Shell
243
884
244
584
Rear Planet
251
894
592
Rear Ring Gear
604
881
251
556
Reverse Drum
061
B
C
680
Gov.
678
Output Shaft
305
781
770
Ext. Hsg.
066
074
D
848
849
774
100146
012
321
747
320
322
746
322
740 Valve Body
741
V.B. Parts
991
Linkage
995
Park Pawl
E

C-4 / C-5

ILL#	PART#	DESCRIPTION	QTY	REF #
		PAPER & RUBBER KIT		
	K26900B-1	Paper & Rubber Kit, [C-4] 1964-69	1	
	K26900D-1	Paper & Rubber Kit, [C-4] 1970-81	1	
	K26900J-1	Paper & Rubber Kit, [C-5] 1982-86	1	
		OVERHAUL KITS		
	K26900C	Overhaul Kit, [C-4] 1964-69	1	
	K26900E	Overhaul Kit, [C-4] (Combo) 1970-81	1	
	K26900J	Overhaul Kit, [C-5] 1982-86	1	
		MASTER L/STEEL KIT		
	DK2600-S	Master L/Steels Kit, [C-4] 1964-69	1	
	DK2600C-S	Master L/Steels Kit, [C-4] (Combo) 1970-81	1	
	DK2600J-S	Master L/Steels Kit, [C-5] 1982-86	1	
		MASTER W/STEEL KIT		
	DK2600	Master W/Steels Kit, [C-4] 1964-69	1	
	DK2600C	Master W/Steels Kit, [C-4] (Combo) 1970-81	1	
	DK2600J	Master W/Steels Kit, [C-5] 1982-86	1	
		FILTER		
010	26422	Filter, [C-4] 1964	1	C4AZ-7A098-B
010	26422A	Filter, [C-4] 1965-69	1	C5AZ-7A098-C
010	26422B	Filter, [C-4] (Flat) (Shallow Pan) 1970-81	1	D0DZ-7A098-B
010	26422C	Filter, [C-4] (With Hump) (Deep Pan) 1974-81	1	D4FZ-7A098-A
010	26422D	Filter, [C-4] (Bronco) (4x4) 1973-77	1	D3BZ-7A098-A
010	26422G	Filter, [C-5] (2WD) 1982-86	1	E2DZ-7A098-A
010	26422H	Filter, [C-5] (4x4) 1982-86	1	E3TZ-7A098-A
010	12776C	Filter, [C-4] (Felt) (Flat) (Shallow Bottom) 1964-81 **(*Use With 26921 Grit-Eater)**	1	
		FILTER KIT		
	FK26422	Filter Kit, [C-4] (Cork) 1964	1	
	FK26422A	Filter Kit, [C-4] (Cork) 1965-69	1	
	FK26422B	Filter Kit, [C-4] (Flat) (Shallow Pan) (Cork) 1970-81	1	
	FK26422C	Filter Kit, [C-4] (With Hump) (Deep Pan) (Cork) 1974-81	1	
	FK26422D	Filter Kit, [C-4] (Bronco) (4x4) (Cork) 1973-77	1	
	FK26422G	Filter Kit, [C-5] (2WD) (Cork) 1982-86	1	
	FK26422H	Filter Kit, [C-5] (4x4) (Cork) 1982-86	1	
		MISC. FILTERS		
014	26922	Screen, [C-4] (Governor)	1	C7AZ-7E424-A
		BANDS		
022	26320F	Band, [C-4 / C-5] (Intermediate) (Flex) 1965-86	1	D9AZ-7D034-C
022	26320K	Band, [C-4 / C-5] (Intermediate) (Flex) 1965-86 (Kevlar)	1	
022	26320B	Band, [C-4] (Intermediate) (Rigid) (1.280”) (No Arrow) 1964-E65	1	
022	26320D	Band, [C-4] (Intermediate) (Rigid) (2.100”) 1965-67	1	
022	K26320S	Band, [C-4 / C-5] (Intermediate) (Slip-In or Snap) 1965-86	1	D9AZ-7D034-A

024	26520A	Band, [C-4 / C-5] (Reverse) (Rear) 1964-86	1	D0AZ-7D095-A
		BUSHINGS		
	K26905	Bushing Kit, [C-4] 1964-69	1	
	K26905A	Bushing Kit, [C-4 / C-5] 1970-86	1	
034	26001B	Bushing, [C-4 / C-5] (Pump) (Babbit) 1964-86	1	C0AP-7B258-A
034	26001	Bushing, [C-4 / C-5] (Pump) (Bronze) 1964-86	1	
036	26000	Bushing, [C-4] (Front Stator) 1964-69	1	C4AZ-7B261-A
036	26000C	Bushing, [C-4 / C-5] (Front Stator) 1970-86	1	D0AZ-7B261-A
037	26000D	Bushing, [C-4 / C-5] (Rear Stator) 1970-86	1	D0AZ-7D018-A
037	26000B	Bushing, [C-4] (Rear Stator) 1964-69	1	C4AZ-7D018-B
046	26002	Bushing, [C-4] (Direct Drum) 1964-69	1	C4AZ-7D046-A
046	26002A	Bushing, [C-4 / C-5] (Direct Drum) 1970-86	1	D0AP-7D046-B
050	26008	Bushing, [C-4 / C-5] (Forward Clutch Hub) 1964-86	1	C6AZ-7E059-A
052	26003	Bushing, [C-4 / C-5] (Sun Gear) 1964-86	2	C4AZ-7D065-A
061	26004	Bushing, [C-4 / C-5] (Reverse Brake Drum) 1964-86	1	C4AZ-7D001-A
064	26005	Bushing, [C-4 / C-5] (Case) 1964-86	1	C4AZ-7D001-A
066	6014	Bushing, [C-4 / C-5] (Extension Housing) (1.500”ID) (Babbit) 1964-86	1	
		METAL CLAD SEALS		
070	16601A	Seal, [C-4 / C-5] (Front) (Without Flange) 1964-86	1	C2AZ-7A248-A
070	16601F	Seal, [C-4 / C-5] (Front) (With Flange) 1964-86	1	C3OP-7A248-A
072	6507A	Seal, [C-4 / C-5] (Linkage) 1964-86	1	D5AZ-7B498-A
074	8850B	Seal, [C-4 / C-5] (Rear) (Small Without Boot) 1964-86	1	
074	16695E	Seal, [C-4 / C-5] (Rear) (Small With Long Boot) 1964-86	1	
074	16695ES	Seal, [C-4 / C-5] (Rear) (Small With Short Boot) 1964-86	1	
074	16695F	Seal, [C-4 / C-5] (Rear) (Large, Truck With Bolt-on Yoke)	1	
		FRICTION CLUTCH		
106	26304B	Friction, [C-4 / C-5] (Direct Clutch) (.078”) 1965-86	3-4	C5AZ-7B164-D
106	26304A	Friction, [C-4] (Direct Clutch) (.090”) 1964	3-4	C4AP-7B164-B
106	26304BHP	Friction, [C-4 / C-5] (Direct Clutch) (.078”) (Hi-Performance Red) 1965-86	3-4	
108	26404B	Friction, [C-4 / C-5] (Forward Clutch) (.061”) (Smooth) 1964-86	4-5	
108	26404BHP	Friction, [C-4 / C-5] (Forward Clutch) (.061”) (Hi-Performance Red) 1964-86	4-5	
	K26100	Friction Module, [C-4 / C-5] 1964-Up	1	
	K26100HP	Friction Module, [C-4 / C-5] (Hi-Performance Red) 1964-Up	1	
		STEEL CLUTCH		
126	26305A	Steel, [C-4] (Forward & Direct Clutch) [C-5] (Forward) (.078”) 1964-86	3-4	
126	26305K	Steel, [C-4] (Forward & Direct Clutch) [C-5] (Forward) (.078”) 1964-86 (Kolene)	3-4	
126	26305C	Steel, [C-4 / C-5] (Direct Clutch) (.060”) (Thin) 1964-86	3-4	
126	26305B	Steel, [C-5] (Direct Clutch) (.090”) 1982-86	3-4	
126	26305X	Steel, [C-4 / C-5] (Forward & Direct Clutch) (.095”) (Oversized) 1964-86	AR	
	K26110	Steel Module, [C-4] 1964-83	1	
	K26110J	Steel Module, [C-5] 1982-86	1	
	K26110K	Steel Module, [C-4] (Kolene) (4 each Steels) 1964-83	1	
		CLUTCH PRESSURE PLATES		
146	26307D	Pressure Plate, [C-4 / C-5] (Forward & Direct Clutch) (.220”) (Top)	1	

C-4 / C-5

146	26307F	Pressure Plate, [C-4 / C-5] (Forward & Direct Clutch) (.141") (Top)	1	E1AZ-7B066-B
146	26307G	Pressure Plate, [C-5] (Forward & Direct Clutch) (.297") (Top)	1	E2SZ-7B066-B
149	26307C	Pressure Plate, [C-4] (Forward Clutch) (.267") (Bottom) 1964-81	1	
149	26307E	Pressure Plate, [C-5] (Forward Clutch) (.313") (Bottom) 1982-86	1	E1AZ-7B066-A
		MODULATORS		
160	26830	Modulator, [C-4] (White Stripes) (Screw In) 1964-72	1	C4AZ-7A377-B
160	26832X	Modulator, [C-4] (Dual Red Stripe) (Push In) 1973-76	1	D3OZ-7A377-A
160	26833Y	Modulator, [C-4] (Single Blue Stripe) (Push In)	1	D9AZ-7A377-A
160	26833S	Modulator, [C-4 / C-5] (Single Green Stripe) (Push In) 1974-86	1	D5AZ-7A377-B
160	26833W	Modulator, [C-5] (Single White Stripe) (Push In) 1982-86	1	E2TZ-7A377-A
160	26833X	Modulator, [C-4] (Single Yellow Stripe) (Push In) 1973-83	1	D2AZ-7A377-A
162	13266	Hose, [C-4 / C-5] (Modulator) (Elbow)	1	
164	T162B	Pin, Modulator Adjustment, (*For All Ford Transmissions)	1	Teckpak
		VALVE BODY KITS		
	K26908	Shift Kit, [C-4] (*All 1964 & Early 65 Mustang)	1	Transgo
	K26908A	Shift Kit, [C-4] 1965-66 (*Except 64-1/2 Mustang)	1	Transgo
	K26908B	Shift Kit, [C-4] 1967 (*6 Cylinder Only)	1	Transgo
	K26908E	Shift Kit, [C-4] 1970-72	1	Transgo
	K26908F	Shift Kit, [C-4 / C-5] (All) 1973-Up	1	Transgo
	47-2	Reprogramming Kit, [C-4] 1967-69 (Automatic Shift, Competition / Off Road & Heavy Duty)	1	Transgo
	40-2	Reprogramming Kit, [C-4] 1970-Up (Automatic Shift, Heavy Duty, Competition / Off Road & Pro Street)	1	Transgo
	47-3	Reprogramming Kit, [C-4] 1967-69 (Stick Shift Full Manual Converts Back to Automatic) (*For [C-5] Heavy Duty & Hi-Performance Use 1973-Up) (*For [C-4] Valve Body & Filter) (*With 40-2 Kit)	1	Transgo
	40-3	Reprogramming Kit, [C-4] 1970-Up (Stick Shift Full Manual Converts Back to Automatic) (*For [C-5] Use 1971-Up) (*For [C-4] Valve Body & Filter)	1	Transgo
		OIL SEALING RINGS		
	K26901	Ring Kit, [C-4] (7-Ring) 1964-69	1	
	K26901A	Ring Kit, [C-4] 1970-77 (*Can Use K26901C)	1	
	K26901B	Ring Kit, [C-4] L1977-Up (*Can Use K26901C)	1	
	K26901T	Ring Kit, [C-4 / C-5] (9-Ring) (Teflon) (Combo) 1970-86	1	
	K26901C	Ring Kit, [C-4 / C-5] (9-Ring) (Combo) 1970-86	1	
179	26226	Ring, [C-4] (Direct Clutch) (1.750"OD) (.093" Wide) (Metal) 1964-69	2	0445-016-002A
179	26228	Ring, [C-4 / C-5] (Direct Clutch) (1.800"OD) (.093" Wide) (Metal) 1970-86	2	C4AZ-7D011-A
181	26225	Ring, [C-4] (Forward Clutch) (1.707"OD) (.093" Wide) (Metal) 1964-69	2	C4AZ-7D019-B
181	26227	Ring, [C-4] (Forward Clutch) (1.757"OD) (.093" Wide) (Metal) 1970-77	2	D0AZ-7A019-A
181	26227A	Ring, [C-4 / C-5] (Forward Clutch) (1.757"OD) (.123" Wide) (Metal) 1977-86	2	D7AZ-7D019-A
189	26645	Ring, [C-4 / C-5] (Governor) (2.687"OD) (.093" Wide) (Metal) 1964-86	3	C4AZ-7D011-A
189	26645T	Ring, [C-4 / C-5] (Governor) (2.687"OD) (.093" Wide) (Teflon) 1964-86	3	
		WASHERS & BEARINGS		
	K26902A	Washer Kit, [C-4] 1964-69 (With Selectives)	1	
	K26902	Washer Kit, [C-4 / C-5] (Without Selectives) 1964-86	1	
	K26902B	Washer Kit, [C-4 / C-5] (With Selectives) 1970-86	1	
211	26209	Washer, [C-4] (Stator to Direct Drum Without Tangs) (.040") 1964-66	1	C4AZ-7D014-A
211	26209A	Washer, [C-4] (Stator to Direct Drum Without Tangs) (.055") 1964-66	1	C4AZ-7D014-B
211	26209B	Washer, [C-4] (Stator to Direct Drum Without Tangs) (.072") 1964-66	1	C4AZ-7D014-C

211	26209S	Washer, [C-4 / C-5] (Stator to Direct Drum With Tangs) (.072") 1966-86	1	D0AZ-7D014-A
211	26209C	Washer, [C-4] (Stator to Direct Drum Without Tangs) (.089") 1964-66	1	C4AZ-7D014-D
211	26209T	Washer, [C-4 / C-5] (Stator to Direct Drum With Tangs) (.089") 1966-86	1	D0AZ-7D014-B
211	26209D	Washer, [C-4] (Stator to Direct Drum Without Tangs) (.106") 1964-66	1	C4AZ-7D014-E
211	26209U	Washer, [C-4 / C-5] (Stator to Direct Drum With Tangs) (.106") 1966-86	1	D0AZ-7D014-C
211	26209V	Washer, [C-4 / C-5] (Stator to Direct Drum With Tangs) (.123") 1966-86	1	D0AZ-7D014-D
211	26209W	Washer, [C-4 / C-5] (Stator to Direct Drum With Tangs) (.140") 1966-86	1	D0AZ-7D014-K
211	K26906	Washer Kit, [C-4] (Stator to Direct Drum Without Tangs) 1964-66	1	
211	K26906A	Washer Kit, [C-4] (Stator to Direct Drum With Tangs) 1967-Up	1	
229	26212	Washer, [C-4 / C-5] (Stator to Forward Drum #1) (.042") 1964-86	1	D0AZ-7D091-F
229	26212A	Washer, [C-4 / C-5] (Stator to Forward Drum #2) (.057") 1964-86	1	D0AZ-7D091-B
229	26212B	Washer, [C-4 / C-5] (Stator to Forward Drum #3) (.074") 1964-86	1	D0AZ-7D091-C
229	26212C	Washer, [C-4 / C-5] (Stator to Forward Drum #4) (.091") 1964-86	1	D0AZ-7D091-J
229	26212D	Washer, [C-4 / C-5] (Stator to Forward Drum #5) (.108") 1964-86	1	D0AZ-7D091-K
229	K26904	Washer Kit, [C-4 / C-5] (Stator to Forward Drum) 1964-86	1	
232	26401	Washer, [C-4] (Forward Drum to Clutch Hub) (7-Tabs & 4-Rectangle Holes) 1964-69	1	C4AZ-7D090-A
232	26401A	Washer, [C-4 / C-5] (Forward Drum to Clutch Hub) (6-Tabs & 3-Round Holes) 1970-86	1	D0AZ-7D090-A
235	26215	Washer, [C-4 / C-5] (Hub to Front Planet) 1964-86	1	C4AZ-7A242-A
243	26425	Race, [C-4 / C-5] (Input Shell to Rear Planet) 1964-86	1	
244	26215	Washer, [C-4] (Input Shell to Rear Planet) 1964-71	1	C4AZ-7A242-A
244	26215A	Washer, [C-4 / C-5] (Shell to Rear Planet) (3-Tabs) (2.150"ID) 1972-86	1	D2OZ-7A242-A
251	36444A	Washer, [C-4] (Rear Planet to Rear Hub & Rear Hub to Reverse Drum) (3-Inner Tabs) (2.050"ID) 1964-79	2	C4AZ-7C096-A
257	26605	Washer, [C-4 / C-5] (Rear Sprag Inner Race to Case) (2-Wide ID Tabs & 2-ID Cut-Outs) 1964-69	1	E0AZ-7D072-A
263	26609	Washer, [C-4 / C-5] (Case to Parking Gear) (Steel) (With 3-Outer Notches) (1.215"ID) 1964-86	1	C4AZ-7B368-A
		GASKETS & RUBBER COMPONENTS		
300	13265	Gasket, [C-4 / C-5] (Bottom Pan) (Cork) 1964-86	1	
300	13265**D** or **F**	Gasket, [C-4 / C-5] (Bottom Pan) (Fiber) 1964-86 **(*Duraprene** or **Farpack)**	1	
305	3939	Gasket, [C-4 / C-5] (Extension Housing) 1964-86	1	C4AZ-7B442-C
307	13259	Gasket, [C-4 / C-5] (Front Servo Cover) 1964-86	1	C4AZ-7D026-C3
310	13261	Gasket, [C-4 / C-5] (Pump) 1964-86	1	E1AZ-7A136-A
311	3971	O-Ring, [C-4] (Pump) 1964-65	1	376950-S
320	13215	Gasket, [C-4] (Valve Body) 1965-66	1	C5AZ-7D100-B
320	13281	Gasket, [C-4] (Valve Body) 1967-69	1	
320	13302A	Gasket, [C-4] (Valve Body) (In Line 6 Cylinder & V6) 1970-81	1	D4OP-7D100-A
320	13305A	Gasket, [C-4] (Valve Body) (4 Cylinder & V6) 1970-81	1	D7FZ-7D100-A
320	26101	Gasket, [C-5] (Valve Body) 1982-86	1	E3DZ-7D100-A
322	26102	Gasket, [C-5] (3-2 Timing Body Seperator) 1982-86	1	E2DZ-7F497-A
326	13326	Gasket, [C-4] (Filter) (Paper) 1973-83	1	D3BZ-7E062-A
	3386	Gasket, [C-4] (Modulator to Case) (Screw In Type Modulator)	1	C2AP-7B426-A
334	3366A	O-Ring, [C-4] (Forward Clutch Piston) (Inner) 1964-69	1	B5AZ-7A294-E
334	13329	O-Ring, [C-4 / C-5] (Forward Clutch Piston) (Inner) 1970-86	1	D0AZ-7A294-A
335	3930	Lathe Cut Seal, [C-4] (Forward Clutch Piston) (Outer) 1964-79	1	C4AZ-7A548-C
335	3930A	Lip Seal, [C-4 / C-5] (Forward Clutch Piston) (Outer) 1979-86	1	D8OZ-7A548-A
336	3366A	O-Ring, [C-4] (Direct Clutch Piston) (Inner) 1964-67	1	B5AZ-7A294-E
336	13263	Lathe Cut Seal, [C-4] (Direct Clutch Piston) (Inner) 1968-69	1	C8AZ-7D404-B
336	13263A	Lathe Cut Seal, [C-4 / C-5] (Direct Clutch Piston) (Inner) 1970-86 (*Can use 13330)	1	D0AP-7D404-A

C-4 / C-5

337	3929	Lathe Cut Seal, [C-4] (Direct Clutch Piston) (Outer) 1964-5/81	1	C8AZ-7A548-B
337	26103	Lip Seal, [C-4 / C-5] (Direct Clutch Piston) (Outer) 6/1981-1986	1	E1AZ-7A548-A
346	3499	O-Ring, [C-4 /C-5] (Modulator)	2	1P-77265-B
349	3499	O-Ring, [C-4 / C-5] (Detent)	2	386078-S
361	13241	Lathe Cut Seal, [C-4] (Intermediate Servo) (Small 1.823"ID) 1965-70	1	C5ZZ-7D025-A
361	13242	Lathe Cut Seal, [C-4] (Intermediate Servo) (Small 1.945"ID) 1965-74	1	C5DZ-7D025-A
361	13244	Lathe Cut Seal, [C-4] (Intermediate Servo) (Small 2.060"ID) 1964-77	1	C4DZ-7D025-A
361	13223	Lathe Cut Seal, [C-4] (Intermediate Servo) (Small 2.271"ID) 1964-83	1	D9FZ-7D025-A
361	13341W	O-Ring, [C-5] (Intermediate Servo) (Small 2.237"ID) 1982-86	1	E2SZ-7D025-A
361	13341G	O-Ring, [C-5] (Intermediate Servo) (Small 2.362"ID) 1982-86	1	E2DZ-7D025-A
361	13240	Lathe Cut Seal, [C-4] (Intermediate Servo) (Small 2.381"ID) 1964-81	1	D9AZ-7D025-A
361	13243	Lathe Cut Seal, [C-4] (Intermediate Servo) (Small 2.505"ID) 1964-81	1	D5TZ-7D025-A
361	13341	O-Ring, [C-5] (Intermediate Servo) (Small 2.550"ID) 1982-86	1	E1AZ-7D025-A
361	13245	Lathe Cut Seal, [C-4] (Intermediate Servo) (Small 2.687"ID) 1965-68	1	C5AZ-7D025-A
361	13301B	Lathe Cut Seal, [C-4] (Intermediate Servo) (Large 2.807"ID) 1970-77	1	D0AZ-7D024-A
361	13475	Lathe Cut Seal, [C-4] (Intermediate Servo) (Large 2.867"ID) 1972-81	1	D2DZ-7D024-A
361	13301A	Lathe Cut Seal, [C-4] (Intermediate Servo) (Large 3.390"ID) 1964-81	1	D5TZ-7D024-A
361	13216A	O-Ring, [C-5] (Intermediate Servo) (Large 3.487"ID) 1982-86	1	E1AZ-7D024-A
364	13325	Lathe Cut Seal, [C-4 / C-5] (Reverse Servo Cover) 1964-86	1	D0AZ-7D040-A
	3410	O-Ring, [C-4 / C-5] (Speed-O Housing)	1	87036594
371	3291	O-Ring, [C-4 / C-5] (Filler Tube)	1	6264902
378	14847	O-Ring, [C-4 / C-5] (Cooler Lines & Fittings)	4	38892-S94
	13222	Hockey Puck, [C-4 / C-5] (Intermediate Accumulator Check Valve Seal) (Rubber) 1964-86	1	D9AZ-7D376-A
	13222A	Orifice Puck, [C-5] (Intermediate Accumulator Check Valve Seal) (White Plastic) 1982-86	1	
		TECHNICAL MANUALS		
	TMC5	Technical Manual, [C-4 / C-5]	1	ATSG
		ELECTRICAL COMPONENTS		
410	26999	Switch, [C-4] (Neutral Safety) 1964-67	1	SW368
410	26999A	Switch, [C-4] (Neutral Safety) 1967-69	1	SW877
410	26999B	Switch, [C-4 / C-5] (Neutral Safety) 1979-86	1	SW1745
	26920	Switch, [C-4] (Spark Control)	1	D2AZ-7E440-A
		MISC. COMPONENTS		
487	26710	Grommet, [ATX] (Linkage Small)	1	D4AZ-7341-A
487	26712	Grommet, [ATX] (Linkage Medium)	1	
487	26711	Grommet, [ATX] (Linkage Large)	1	
487	26713A	Bushing, [AOD] (Carburator-End of T.V. Rod) (*Steel Replacement Bushing)	1	F3SZ-7H303-B
487	26713	Grommet, [AOD / AODE / 4R70W] (Passing Gear) (Narrow Groove) (Yellow)	1	
		HARD PARTS		
500	26200C	Pump, [C-4] (O-Ring Type) (*Uses a No Tang Washer #211) 1964-66	1	C4AZ-7A103-G
500	26200G	Pump, [C-4] (*Uses a Washer #211 With Tangs) 1967-69	1	
500	26200D	Pump, [C-4] 1970-77	1	D0AZ-7A103-A
500	26200E	Pump, [C-4] 1978-81	1	D7AZ-7A103-A
500	26200F	Pump, [C-5] (Lock-Up) 1982-86	1	E2SZ-7A103-A
510	26427	Pump Body W/Gears, [C-4] (O-Ring Type) 1964-66	1	
510	26427A	Pump Body W/Gears, [C-4 / C-5] (Without O-Ring) 1966-86	1	
520	26204A	Stator, [C-4] (*Uses a Washer #211 With No Tangs) 1964-69 (.790"ID Bushings) & (.093" Wide Rings #181)	1	

520	26204B	Stator, [C-4] (*Uses a Washer #211 With Tangs) 1970-77 (.790"ID Bushings) & (.093" Wide Rings #181)	1	D0AZ-7A108-A
520	26204C	Stator, [C-4] (With Spring) 1978-81 (.845"ID Bushings) & (.123" Wide Rings #181)	1	D7AZ-7A108-A
520	26204D	Stator, [C-5] (Without Spring) 1982-86 (.845" ID Bushings) & (.123" Wide Rings #181)	1	E2SZ-7A208-A
530	K26201	Pump Gears, [C-4 / C-5] 1964-86	1	C4AZ-7C010-F
554	26400AB	Drum, [C-4] (Forward Clutch) (4 Clutch) (24-Spline) 1964-69	1	
554	26400A	Drum, [C-4] (Forward Clutch) (5 Clutch) (24-Spline) 1964-69	1	
554	26400AA	Drum, [C-4] (Forward Clutch) (5 Clutch) (26-Spline) 1970 Only*	1	D0AZ-7A360-A
554	26400B	Drum, [C-4] (Forward Clutch) (5 Clutch) (24-Spline) 1971-80	1	D8OZ-7A360-A
554	26400C	Drum, [C-4 / C-5] (Forward Clutch) (5 Clutch) (24-Spline) 1981-86	1	E1DZ-7A360-A
555	26300	Drum, [C-4] (Direct Clutch) (4 Clutch) (2-7/16" Tall) 1964 Only*	1	
555	26300C	Drum, [C-4] (Direct Clutch) (4 Clutch) (2-11/16" Tall) 1965-69	1	
555	26300D	Drum, [C-4] (Direct Clutch) (4 Clutch) 1970-81	1	
555	26300G	Drum, [C-5] (Direct Clutch) (3 Clutch) 1982-86	1	
556	26510	Drum, [C-4 / C-5] (Reverse) (Rear Band Drum) 1964-86	1	
574	26426	Hub, [C-4] (Forward Clutch) (Without Bushing) 1964	1	
574	26426A	Clutch Hub, [C-4] (Forward Clutch) 1965-80	1	
574	26426B	Hub, [C-4 / C-5] (Forward Clutch) 1981-86	1	
582	26412A	Planet, [C-4] (Front) (*Uses a 3-Piece Bearing Inside) 1964-81	1	
582	26412B	Planet, [C-5] (Front) (*Uses a 1-Piece Bearing Inside) 1982-86	1	
584	26503A	Planet, [C-4 / C-5] (Rear) 1964-86	1	
592	26410A	Ring Gear, [C-4 / C-5] (Front & Rear Planet) 1964-86	2	
604	26505	Hub, [C-4 / C-5] (Output Shaft) 1964-86	1	
612	26421	Sun Gear, [C-4] (With Small Lube Holes) 1964-80	1	
612	26421A	Sun Gear, [C-4 / C-5] (With Large Lube Holes) 1981-86	1	
622	26423	Shell, [C-4 / C-5] (Primary Sun Gear) 1964-65	1	
622	26423A	Shell, [C-4 / C-5] (Primary Sun Gear) 1965-86	1	
		SPRAGS & ONE WAY CLUTCHES		
654	K26903A	Sprag Kit, [C-4 / C-5] (Spring & Roller Kit) 1964-81	1	C4AZ-7D098-A
654	K26911	Sprag Kit, [C-4 / C-5] (Spring & Rollers & Retainer) 1964-81	1	
		HARD PARTS (Continued)		
664	26600	Inner Race, [C-4] (Sprag) 1964-73	1	
664	26600A	Inner Race, [C-4 / C-5] (Sprag) 1974-86	1	
665	26601A	Outer Race, [C-4] (Sprag) 1964-E73	1	
665	26601B	Outer Race, [C-4 / C-5] (Sprag) L1973-86	1	
670	26411	Input Shaft, [C-4] (24 & 24-Spline) 1964-69	1	
670	26411B	Input Shaft, [C-4] (26 & 26-Spline) 1970 Only*	1	
670	26411A	Input Shaft, [C-4 / C-5] (26 & 24-Spline) 1971-86	1	
678	26555	Output Shaft, [C-4 / C-5] (2WD) (7 Teeth Speed-O Gear)	1	
678	26555A	Output Shaft, [C-4 / C-5] (2WD) (8 Teeth Speed-O Gear)	1	
678	26555B	Output Shaft, [C-4 / C-5] (9 Teeth Speed-O Gear) 1965-Up	1	
678	26655C	Output Shaft, [C-4 / C-5] (Bolt-on Yoke Type)	1	
678	26555E	Output Shaft, [C-4] (4x4) (12" Long)	1	

678	26555F	Output Shaft, [C-4 / C-5] (4x4) (13-1/4" Long)	1	
680	26615A	Governor, [C-4] 1964-72	1	
680	26615B	Governor, [C-4] (Orange Ink Identification) 1973-81	1	
680	26615C	Governor, [C-5] (Pink / Black Ink Identification)	1	
685	26616	Support, [C-4 / C-5] (Governor)	1	
690	26690	Gear, [C-4 / C-5] (Parking)	1	
697	26353	Oil Distribution Sleeve, [C-4] 1964-69	1	
697	26353A	Oil Distribution Sleeve, [C-4 / C-5] 1970-86	1	
		VALVE BODIES (REBUILT)		
740	FD-3301	Valve Body, [C-4] 1965-81	1	
740	FD-3302	Valve Body, [C-5] 1982-86	1	
		VALVE BODIES		
740	26949	Valve Body, [C-4] (8-Bolt) 1965-66 (Detents on Manual Valve)	1	
740	26950	Valve Body, [C-4] (8-Bolt) 1967-69 (Detents on Manual Valve)	1	
740	26951	Valve Body, [C-4] (8-Bolt) 1970 (With Slider Manual Valve)	1	
740	26957	Valve Body, [C-4] (9-Bolt) 1970-81	1	
740	26956A	Valve Body, [C-4] (9-Bolt) (Pinto) 1970-81	1	
740	26960	Valve Body, [C-5] (Lock-Up) 1982-86	1	
		VALVE BODY COMPONENTS		
741	K26909	Check Valve & Spring, [C-4] (Under Filter)	1	D5AZ-7E368-A
741	13923	Check Ball, [C-4] (Valve Body) (.212") (Rubber)	1	
		HARD PARTS (Continued)		
750	26387AA	Bell Housing, [C-4] (4 Cylinder) (Top Bolts 5-1/8") (3-Bolt Starter) (Bolts to Pump)	1	
750	26837A	Bell Housing, [C-4] (4 Cylinder) (Top Bolts 4-3/4") (3-Bolt Starter at 11:00) (Bolts to Pump) (Cast # D8BP 7976AA)	1	
750	26387	Bell Housing, [C-4] (V-6) (Top Bolts 3-1/2") (Bolts to Pump)	1	
750	26380C	Bell Housing, [C-4] (302) (With 10-3/4" Converter) (Without Cable Mount Holes) (Bolts to Pump)	1	
750	26380A	Bell Housing, [C-4] (302) (With 11-3/4" Converter) (With Cable Mount Holes) (Bolts to Pump)	1	
750	26380B	Bell Housing, [C-4] (302) (With 12-3/4" Converter) (With Cable Mount Holes) (Bolts to Pump)	1	
750	26380	Bell Housing, [C-4] (302) (With 12-3/4" Converter) (Without Cable Mount Holes) (Bolts to Pump)	1	
750	26380D	Bell Housing, [C-4] (302) (With 12-3/4" Converter) (With Cable Mount Holes) (Bolts to Case)	1	
750	26380E	Bell Housing, [C-4] (302) (With 12-3/4" Converter) (Without Cable Mount Holes) (Bolts to Case)	1	
750	26386	Bell Housing, [C-5] (Top Bolts 5") (With Cable Mount Holes) (Bolts to Pump) 1982-86	1	
750	26386A	Bell Housing, [C-5] (Top Bolts 5") (Without Cable Mount Holes) (Bolts to Pump) 1982-86	1	
750	26386C	Bell Housing, [C-5] (Top Bolts 5") (With Cable Mount Holes) (Bolts to Case) 1982-86	1	
750	26386B	Bell Housing, [C-5] (Top Bolts 7") (Bolts to Pump) 1982-86	1	
760	26360AA	Case, [C-4] (Screw In Modulator) (Bell Bolts to Pump) 1964-66 (*Uses Pump Body With O-Ring)	1	
760	26360A	Case, [C-4] (Screw In Modulator) (Bell Bolts to Pump) 1966-72 (*Uses Pump Body With No O-Ring)	1	
760	26361A	Case, [C-4] (Screw In Modulator) (Bell Bolts to Case) 1966-72 (Humpback Case) (*Uses Pump Body With no O-Ring)	1	

760	26369D	Case, [C-4] (Push In Modulator) (Bell Bolts to Pump) 1972-81	1	
760	26369E	Case, [C-4] (Push In Modulator) (Bell Bolts to Case) 1972-81 (Humpback Case)	1	
760	26369F	Case, [C-5] (Push In Modulator) (Bell Bolts to Pump) 1982-86 (Fine Thread Band Adjustment) (Humpback Case)	1	
760	26364	Case, [C-5] (Push In Modulator) (Bell Bolts to Case) 1982-86 (Fine Thread Band Adjustment)	1	
765	26340	Pan, [C-4] (2WD) (Less Filler Tube) (Filler Tube Screws Into Pan)	1	
765	26341	Pan, [C-4] (2WD) (Filler Tube is in the Case)	1	
765	26342	Pan, [C-5] (Lock-Up) (2WD) 1982-86	1	
765	26341A	Pan, [C-4] (4x4) (Has Filler Tube in Case) (Flat Bottom)	1	
765	26341B	Pan, [C-4] (4x4) (With Hump) (Filler Tube is in the Case)	1	
770	26372	Extension Housing, [C-4 / C-5] (2WD) (Car) (With Vent) 1970-Up	1	
770	26377	Extension Housing, [C-4 / C-5] (Truck) (Bolt-on Type Yoke) 1970-86	1	
770	26378	Extension Houisng, [C-4 / C-5] (4x4) (6-3/4" Aluminum)	1	
770	26370A	Extension Houisng, [C-4] (2WD) (No Vent) 1964-69	1	
	26761	Converter Nut, [C-4 / C-5] (Flange Type)	4	
	30109	Converter Plug, [C-4 / C-5] (Allen Head)	1	
	30109B	Converter Plug, [C-4 / C-5] (7/16" Hex Head)	1	
843	26994	Bracket, [C-4 / C-5] (Modulator) 1972-86	1	D3AZ-7F006B
	K26928	Snap Ring Kit, [C-4 / C-5] 1964-86	1	25680
877	26311	Snap Ring, [C-4 / C-5] (Holds Forward Clutch Return Spring In) (.082" Thick) (5"OD)	1	
878	26310D	Snap Ring, [C-4 / C-5] (Forward & Direct Clutch) (.052")	1	
878	26310A	Snap Ring, [C-4 / C-5] (Forward & Direct Clutch) (.060"-.066")	1	
878	26310	Snap Ring, [C-4 / C-5] (Forward & Direct Clutch) (.070"-.080")	1	
878	26310B	Snap Ring, [C-4 / C-5] (Forward & Direct Clutch) (.088"-.094")	1	
878	26310C	Snap Ring, [C-4 / C-5] (Forward & Direct Clutch) (.102"-.106")	1	
879	26312	Snap Ring, [C-4 / C-5] (Holds Direct Clutch Retainer In)	1	
881	26313	Snap Ring, [C-4 / C-5] (Holds Forward Clutch Hub to Front Ring Gear)	2	
884	26314	Snap Ring, [C-4 / C-5] (Holds Bowl to Sun Gear)	1	
894	26315	Snap Ring, [C-4 / C-5] (Holds Rear Hub to Output Shaft) (Wire Type)	1	
895	26315	Snap Ring, [C-4 / C-5] (Holds Governor Support to Output Shaft) (.050" Thick) (With 2-Eyelets)	1	
905	K26895	Servo Assembly, [C-4 / C-5] (Intermediate)	1	
905	K13259C	Servo Assembly, [C-4 / C-5] (Intermediate) (*With Purple Anodized Cover) (*Shelby Hi-Performance)	1	Sonnax
912	26528A	Piston, [C-4 / C-5] (Reverse Servo)	1	D1AZ-7D189-A
916	26321	Strut Assembly, [C-4 / C-5] (Intermediate Band)	1	
917	26321A	Strut Assembly, [C-4 / C-5] (Reverse) (Rear Band)	1	
922	26610	Nut, [C-4] (Band Adjustment) (Coarse Thread) 1964-81	1-2	380850-S
922	26610A	Nut, [C-4 / C-5] (Band Adjustment) (Fine Thread) 1982-86	1-2	389049-S
964	26402A	Piston, [C-4 / C-5] (Forward Clutch)	1	
965	26301B	Piston, [C-4 / C-5] (Direct Clutch)	1	
974	26406	Spring, [C-4 / C-5] (Forward Clutch Return)	1	E1AZ-7B070-A
985	K26907	Retainer, [C-4] (With Spring) (Direct Clutch Spring) 1964-69	1	
989	26911	Retainer, [C-4] (Sprag) (With Springs) 1970-86	1	D8O7-7D191-A

C-4 / C-5

991	K26676	Linkage Assembly, [C-4 / C-5] (Internal)	1	
991	26675	Kickdown Lever, [C-4] (Internal)	1	
995	K26678	Park Pawl Assembly, [C-4 / C-5]	1	
996	26930	Fitting, [C-4 / C-5] (Cooler Line) (90 Degree Elbow) (5/16" Line x 1/8" Pipe Thread) (Screw in Flared)	1	E2SZ-7D273-A
997	26675A	Lever, [C-4 / C-5] (Detent)	1	
999	K26679	Tube Set, [C-4 / C-5] (Oil)	1	

NOTES

C-3

RWD 3 Speed

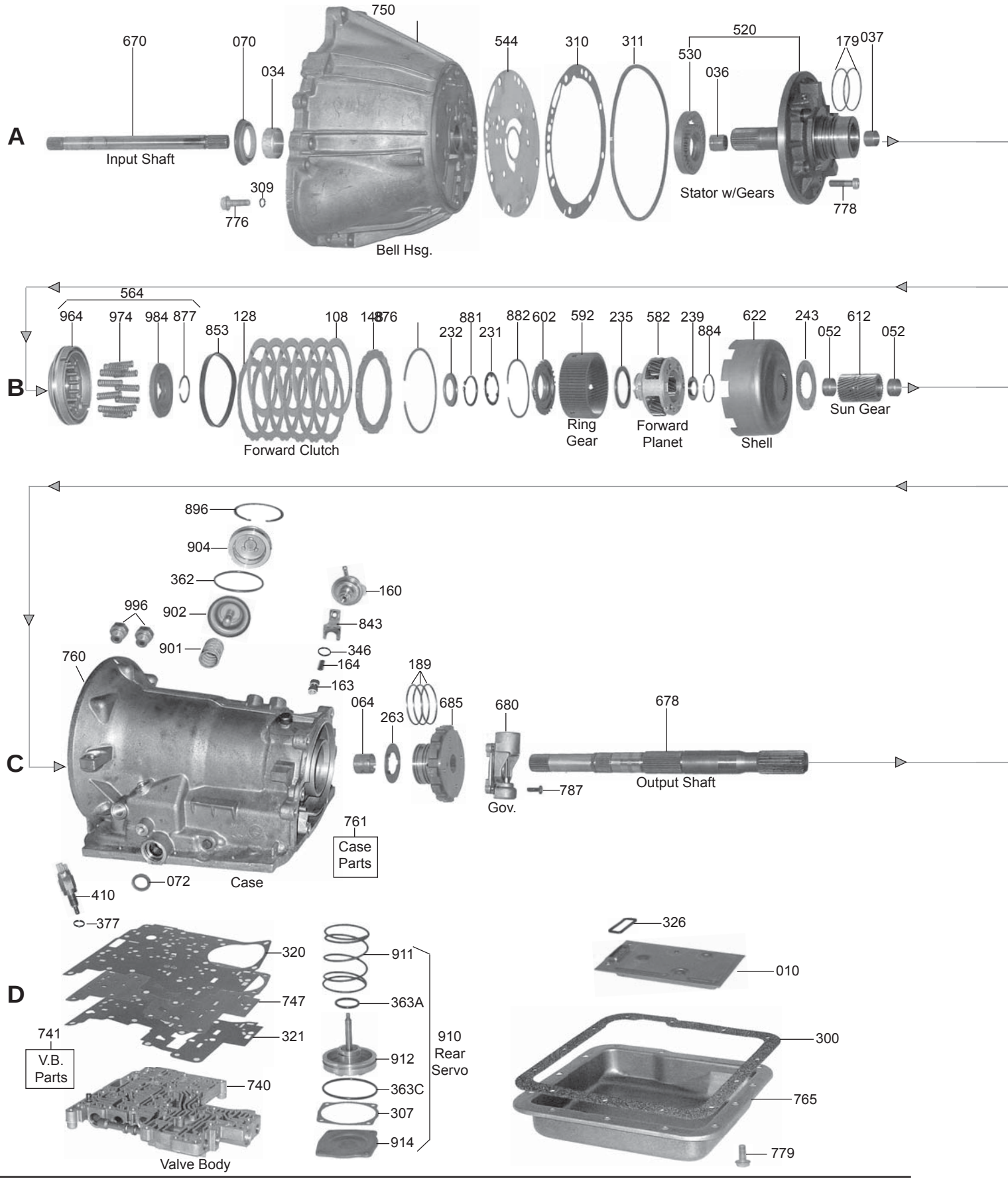

RWD 3 Speed

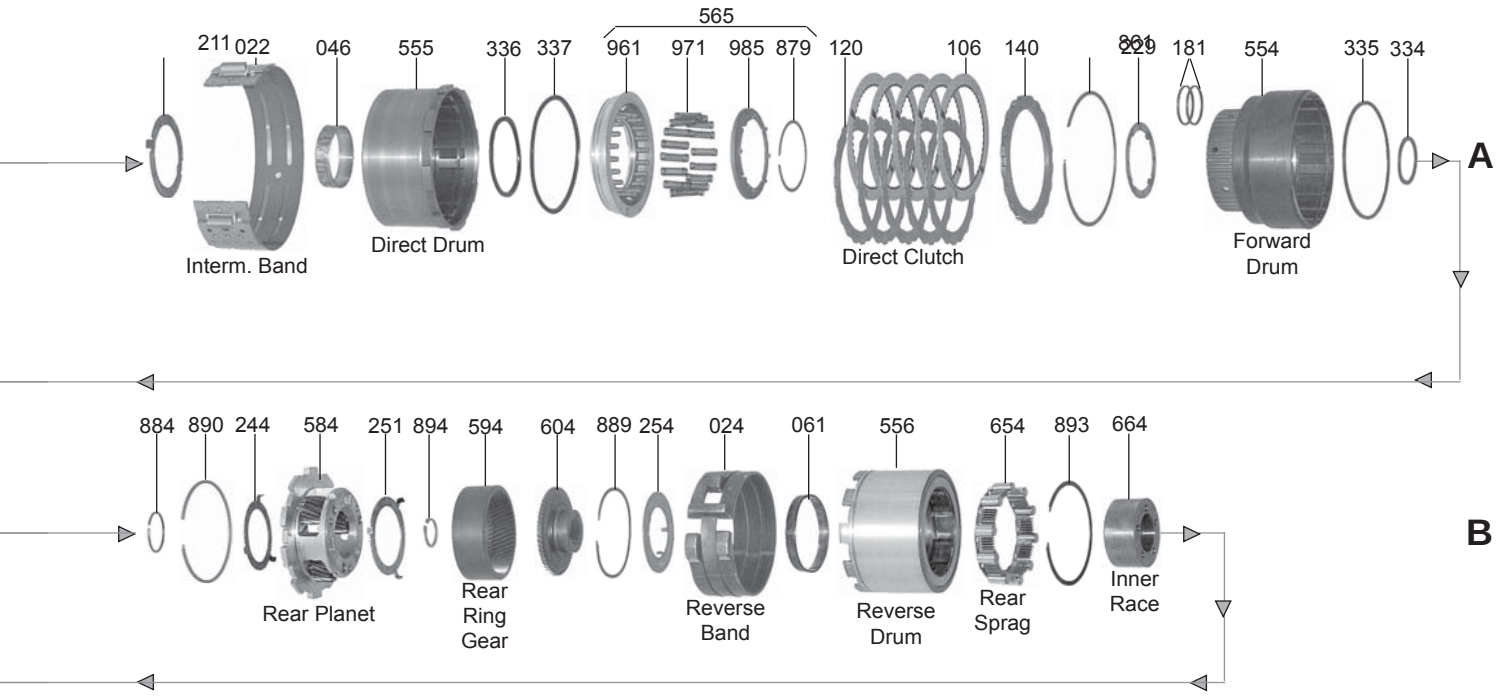
565
211
022
046
555
336
337
961
971
985
879
120
106
140
229
181
554
335
334
Interm. Band
Direct Drum
Direct Clutch
Forward Drum
A
884
890
244
584
251
894
594
604
889
254
024
061
556
654
893
664
Rear Planet
Rear Ring Gear
Reverse Band
Reverse Drum
Rear Sprag
Inner Race
B

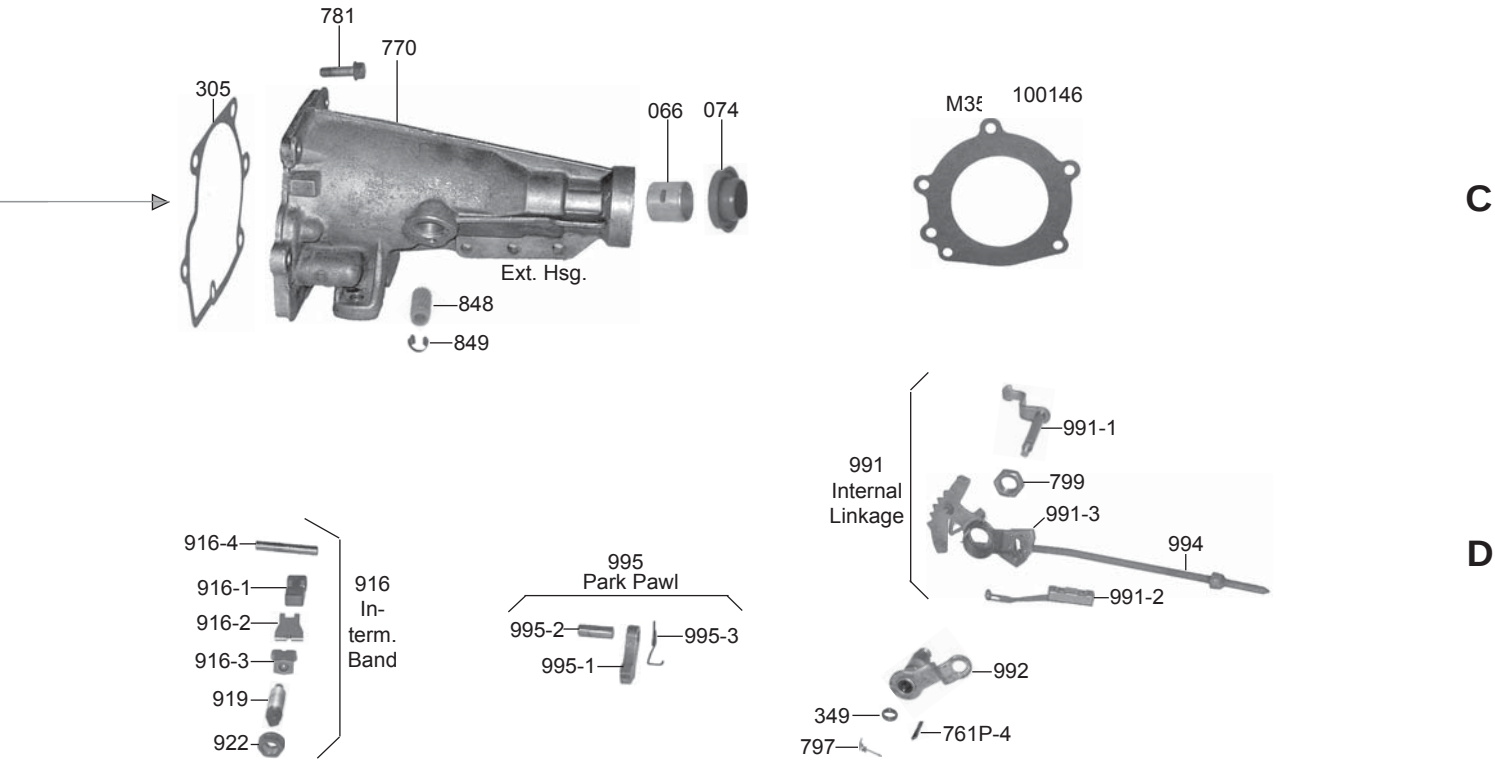
781
770
305
066
074
Ext. Hsg.
848
849
C
100146
916-4
916-1
916-2
916-3
919
922
916 In-term. Band
995 Park Pawl
995-2
995-3
995-1
991-1
799
991-3
994
991-2
991 Internal Linkage
992
349
761P-4
797
D

A4LD/4R44E/4R55E/5R55E

RWD 4/5 Speed

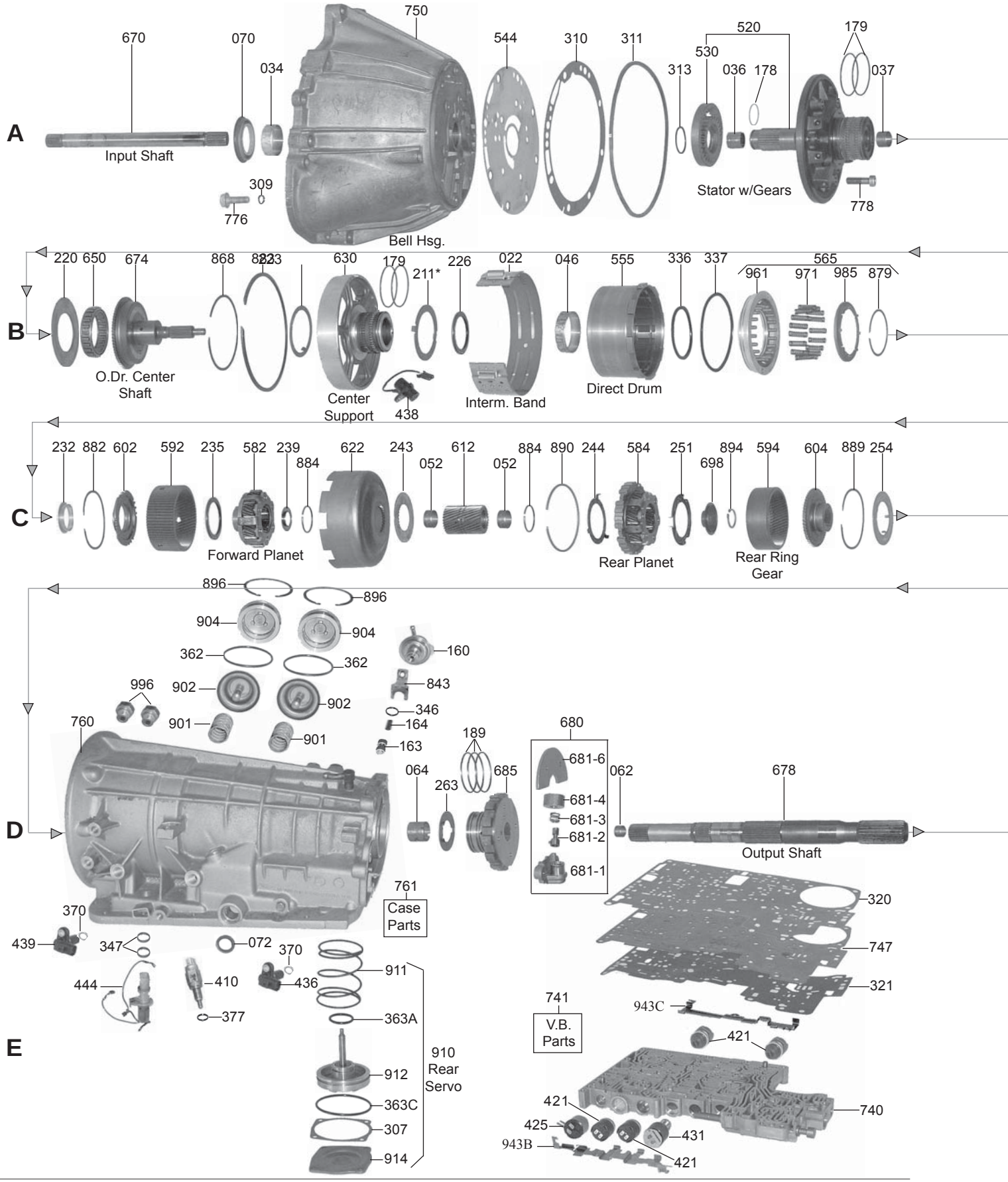

A4LD/4R44E/4R55E/5R55E

RWD 4/5 Speed

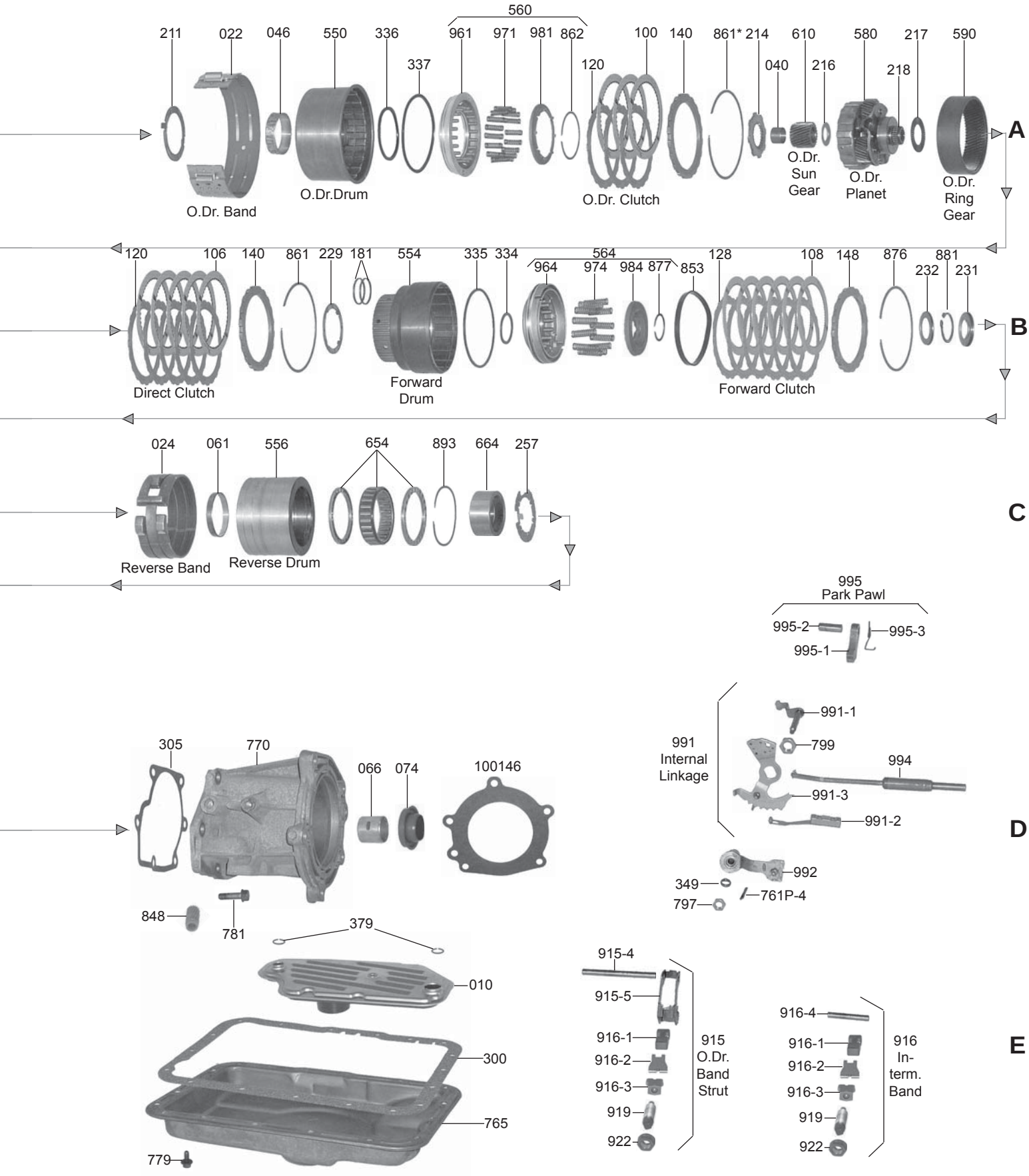

C-3/A4LD/4R44E/4R55E/5R55E

ILL#	PART#	DESCRIPTION	QTY	REF #
		PAPER & RUBBER KITS		
	K56900-1	Paper & Rubber Kit, [C-3] 1974-87	1	
	K56900C-1	Paper & Rubber Kit, [A4LD] (Combo) 1985-96	1	
	K56900G-1	Paper & Rubber Kit, [4R44E / 4R55E] 1995-Up	1	
		OVERHAUL KITS		
	K56900	Overhaul Kit, [C-3] 1974-87	1	
	K56900C	Overhaul Kit, [A4LD] (Combo) 1985-96	1	
	K56900D	Overhaul Kit, [A4LD] 1985-87	1	
	K56900E	Overhaul Kit, [A4LD] 1988-Up	1	
	K56900G	Overhaul Kit, [4R44E / 4R55E] 1995-96	1	
	K56900H	Overhaul Kit, [4R44E / 4R55E / 5R55E] 1997-Up	1	
		MASTER L/STEELS KIT		
	DK5600-S	Master L/Steels Kit, [C-3] 1974-87	1	
	DK5600E-S	Master L/Steels Kit, [A4LD] 1985-89	1	
	DK5600F-S	Master L/Steels Kit, [A4LD] 1990-Up	1	
	DK5600G-S	Master L/Steels Kit, [4R44E / 4R55E] 1995-96	1	
	DK5600H-S	Master L/Steels Kit, [4R44E / 4R55E / 5R55E] 1997-Up	1	
		MASTER W/STEELS KIT		
	DK5600A	Master W/Steels Kit, [C-3] 1974-E78	1	
	DK5600B	Master W/Steels Kit, [C-3] L1978-87	1	
	DK5600E	Master W/Steels Kit, [A4LD] 1985-89	1	
	DK5600F	Master W/Steels Kit, [A4LD] 1990-Up	1	
	DK5600G	Master W/Steels Kit, [4R44E / 4R55E] 1995-96	1	
	DK5600H	Master W/Steels Kit, [4R44E / 4R55E / 5R55E] 1997-Up	1	
		FILTERS		
010	56422	Filter, [C-3] 1974-87	1	D4AZ-7A098-A
010	56710	Filter, [A4LD] (2WD) (OE Style) 1985	1	
010	56710D	Filter, [A4LD] (4x4) (OE Style) 1985	1	
010	56710A	Filter, [A4LD] (2WD) 1986-88	1	E6TZ-7A098-B
010	56710H	Filter, [A4LD / 4R44E / 4R55E / 5R55E] (4x4) (Zero Leak) 1986-Up	1	E6TZ-7A098-A
010	56710G	Filter, [A4LD / 4R44E / 4R55E / 5R55E] (2WD) (Zero Leak) 1989-Up	1	E9TZ-7A098-C
		FILTER KITS		
	FK56422	Filter Kit, [C-3] 1974-87	1	
	FK56710	Filter Kit, [A4LD] (2WD) (OE Style) 1985	1	
	FK56710D	Filter Kit, [A4LD] (4x4) (OE Style) 1985	1	
	FK56710A	Filter Kit, [A4LD] (2WD) 1986-88	1	
	FK56710H	Filter Kit, [A4LD / 4R44E / 4R55E / 5R55E] (4x4) (Zero Leak) 1986-Up	1	
	FK56710G	Filter Kit, [A4LD / 4R44E / 4R55E / 5R55E] (2WD) (Zero Leak) 1989-Up	1	
		MISCELLANEOUS FILTERS		
	56712	Screen, [A4LD] (TCC Solenoid)	1	E8TZ-7N113-B

C-3/A4LD/4R44E/4R55E/5R55E

		BANDS		
022	56320A	Band, [C-3] (Intermediate Flex) 1974-84	1	
022	56320A	Band, [C-3 / A4LD / 4R44E / 4R55E / 5R55E / 5R55N] (Intermediate & Overdrive Flex) 1985-Up	1-2	E6TZ-7D034-A
022	56320E	Band, [A4LD] (Intermediate) (4.0L) (Double Wrap) 1991-92	1	F0TZ-7F196-A
024	56520	Band, [C-3 / A4LD / 4R44E / 4R55E / 5R55E] (Reverse)	1	E3ZZ-7D095-A
		BUSHINGS		
	K56902	Bushing Kit, [C-3]	1	
	K56902D	Bushing Kit, [A4LD / 4R44E / 4R55E] (With Cast Iron or Steel Direct Drum) 1985-96	1	
	K56902H	Bushing Kit, [4R44E / 4R55E / 5R55E] 1997-Up	1	
034	56001B	Bushing, [C-3 / A4LD / 4R44E / 4R55E / 5R55E] (Bell Housing / Pump) (Babbit) 1974-Up	1	
034	56001	Bushing, [C-3 / A4LD / 4R44E / 4R55E / 5R55E] (Bell Housing / Pump) (Bronze) 1974-Up	1	
036	56000B	Bushing, [C-3 / A4LD / 4R44E / 4R55E / 5R55E] (Stator) (Front) (With Spiral ID Groove & Overdrive Sun Gear) (Bronze) 1974-89	1-2	
036	56000C	Bushing, [A4LD / 4R44E / 4R55E / 5R55E] (Stator) (Front) (With Grooves on ID & OD) (Bronze) 1990-Up	1	
037	56000A	Bushing, [C-3 / A4LD / 4R44E / 4R55E / 5R55E] (Stator) (Rear) 1974-Up	1	
040	56000B	Bushing, [A4LD] (Overdrive Sun Gear) 1985-Up	1	
046	56002	Bushing, [C-3 / A4LD] (Direct & Overdrive Clutch Drum) (Cast Iron Drums) 1974-Up	1	
046	56002A	Bushing, [C-3 / A4LD / 4R44E / 4R55E] (Direct & Overdrive Drum) 1974-Up	2	
052	56003	Bushing, [C-3 / A4LD / 4R44E] (Sun Gear) **(*Not Used on 4.0L)** 1974-Up	2	74DT-7D065-AA
061	56004	Bushing, [C-3 / A4LD / 4R44E / 4R55E] (Reverse Drum) 1974-Up	1	
061	56245	Caged Needle Bearing, [5R55E] (Reverse Drum) 1997-Up	1	
062	56006	Bushing, [A4LD] (Output Shaft Pilot) 1985-89	1	
062	56006N	Bearing, [A4LD / 4R44E / 4R55E / 5R55E] (Output Shaft Pilot) 1990-Up	1	
064	56005	Bushing, [C-3 / A4LD / 4R44E / 4R55E] (Case) 1974-Up	1	
066	56014	Bushing, [C-3 / A4LD / 4R44E / 4R55E / 5R55E] (Extension Housing) (Babbit) 1974-Up	1	D7FZ-7A034-A
		METAL CLAD SEALS		
070	56550A	Seal, [C-3 / A4LD / 4R44E / 4R55E] (Front) (With Flange) 1985-96 (Viton, Deep Lip) (Black Rubber)	1	E5TZ-7A248-A
070	56550B	Seal, [4R44E / 4R55E / 5R55E] (Front) (No Flange) 1997-Up (Rubber Coated)	1	F77Z-7A248-AA
072	6507A	Seal, [C-3 / A4LD / 4R44E / 4R55E / 5R55E] (Linkage) 1974-Up	1	D5AZ-7B498-A
074	56557	Seal, [C-3 / A4LD / 4R44E / 4R55E / 5R55E] (Rear) (Without Boot) (*Except 5R55N/ W / S) 1974-Up	1	D5ZZ-7052-A
074	56557B	Seal, [C-3 / A4LD / 4R44E / 4R55E / 5R55E] (Rear) (With Boot) 1974-Up	1	E2ZZ-7052-A
		FRICTION CLUTCH		
100	56304A	Friction, [A4LD] (Overdrive Clutch) (.078") 1985-89	2-3	E5TZ-7B164-A
100	56304C	Friction, [A4LD / 4R44E / 4R55E] (Overdrive Clutch) (.069") 1990-96	3	F0TZ-7B164-C
100	56304D	Friction, [4R44E / 4R55E / 5R55E] (Overdrive Clutch) (.069") (With Directional Grooves) 1997-Up	3	F7ZZ-7B164-CA
106	56304	Friction, [C-3 / A4LD] (Direct Clutch) (.075") 1974-89	4-5	E3ZZ-7B164-B
106	56304B	Friction, [A4LD / 4R44E / 4R55E] (Direct Clutch) (.069") 1990-96	6	F0TZ-7B164-B
106	56304E	Friction, [4R44E / 4R55E / 5R55E] (Direct Clutch) (.069") (With Directional Grooves) 1997-Up	6	F7ZZ-7B164-BA
108	56404	Friction, [C-3 / A4LD] (Forward Clutch) (.075") 1974-89	3-5	E3ZZ-7B164-A
108	56404B	Friction, [A4LD / 4R44E / 4R55E] (Forward Clutch) (.069") 1990-96	6	F0TZ-7B164-A
108	56404C	Friction, [4R44E / 4R55E / 5R55E] (Forward Clutch) (.069") (With Directional Grooves) 1997-Up	6	F7ZZ-7B164-AA

C-3/A4LD/4R44E/4R55E/5R55E

	K56100	Friction Module, [C-3] 1974-87	1	
	K56100E	Friction Module, [A4LD] 1985-89	1	
	K56100F	Friction Module, [A4LD / 4R44E / 4R55E] 1990-96	1	
	K56100H	Friction Module, [4R44E / 4R55E / 5R55E] 1997-Up	1	
		STEEL CLUTCH		
120	56305	Steel, [C-3] (Direct Clutch) (.081") 1974-77	4-6	D4ZZ-7B442-B
120	56305A	Steel, [C-3 / A4LD] (Direct & Overdrive Clutch) (.068") 1978-89	7-8	D8ZZ-7B442-B
120	56305B	Steel, [A4LD / 4R44E / 4R55E / 5R55E] (Direct & Overdrive Clutch) (.065") 1990-96	3-9	F0TZ-7B442-B
120	56305C	Steel, [4R44E / 4R55E / 5R55E] (Direct Clutch) (.082") 1997-Up	1	
120	56305X	Steel, [C-3 / A4LD] (Direct Clutch) (.098") (Oversized)	AR	
128	56405	Steel, [C-3] (Forward Clutch) (.078") 1974-78	3-5	D4ZZ-7B442-A
128	56405A	Steel, [C-3 / A4LD] (Forward Clutch) (.068") 1978-89	3-5	D8ZZ-7B442-A
128	56405B	Steel, [A4LD / 4R44E / 4R55E / 5R55E] (Forward Clutch) (.065") 1990-Up	5-6	F0TZ-7B442-A
128	56405X	Steel, [C-3 / A4LD] (Forward Clutch) (.098") (Oversized)	AR	
	K56110	Steel Module, [C-3] 1974-E78	1	
	K56110B	Steel Module, [C-3] L1978-87	1	
	K56110E	Steel Module, [A4LD] 1985-89	1	
	K56110F	Steel Module, [A4LD / 4R44E / 4R55E] 1990-96	1	
	K56110H	Steel, Module, [5R55E] 1997-Up	1	
		CLUTCH PRESSURE PLATES		
140	56307	Pressure Plate, [C-3 / A4LD] (Direct & Overdrive Clutch) (.218") 1974-89	1-2	D4ZZ-7B066-B
140	56307B	Pressure Plate, [A4LD / 4R44E / 4R55E / 5R55E] (Direct & Overdrive Clutch) (.200") 1990-Up	1-2	F0TZ-7B066-B
148	56408	Pressure Plate, [C-3 / A4LD] (Forward Clutch) 1974-89	1	D4ZZ-7B066-A
148	56408D	Pressure Plate, [A4LD / 4R44E / 4R55E / 5R55E] (Forward Clutch) 1990-Up	1	F0TZ-7B066-A
		MODULATORS		
160	56830A	Modulator, [C-3] (No Stripe) (Single Line) 1974-80	1	D6ZZ-7A377-A
160	56831	Modulator, [C-3] (Black Stripe) (Single Line) (4 Cylinder) 1981-87	1	E1ZZ-7A377-B
160	56832	Modulator, [C-3] (Green Stripe) (Single Line) (6 Cylinder) 1980-87	1	E1SZ-7A377-B
160	56830	Modulator, [C-3] (No Stripe) (Dual Line) 1974-76	1	
160	56833	Modulator, [A4LD] (No Stripe) (Single Line) (Non Adjustable) 1985-Up	1	E5TZ-7A377-B
160	56833M	Modulator, [A4LD] (No Stripe) (Single Line) (With Modojust Dial) 1985-Up	1	E5TZ-7A377-B
160	56833T	Modulator, [A4LD] (No Stripe) (Single Line) (With Turbo)	1	EASZ-7A377-A
163	56833-01K	Valve Modulator Kit, (Oversize) [A4LD] **(*Requires: Tool 56833-TL)**	1	Sonnax
164	56682	Pin, [C-3 / A4LD] (Modulator)	1	E5TZ-7A380-B
164	T162B	Pin, Modulator Adjustment, (*For All Ford Transmissions)	1	Teckpak
		VALVE BODY KITS		
	K56908	Shift Kit, [C-3] 1974-Up	1	Transgo
	K56908AS	Valve Body Kit, [A4LD] 1985-95	1	Superior
	K56908BS	Valve Body Kit, [4R44E / 4R55E / 5R55E] 1995-2002	1	Superior
	K56908B	Shift Kit, [4R44E / 4R55E / 5R55E] 1995-2002	1	Transgo
	K56908JR	Shift Kit, [A4LD] (Junior) 1985-95	1	Transgo
		OIL SEALING RINGS		
	K56901	Ring Kit, [C-3] 1974-87	1	
	K56901D	Ring Kit, [A4LD / 4R44E / 4R55E] (Without Governor Rings) (5-Ring) (2-Metal, 3-Teflon) 1985-95	1	

	K56901G	Ring Kit, [4R44E / 4R55E] 1995-96	1	
	K56901H	Ring Kit, [4R44E / 5R55E / 5R44E] 1997-05	1	
178	56230A	Ring, [4R44E / 4R55E / 5R55E] (Stator) (Front) 1997-Up (Solid Ring)	1	
178	56230T	Ring, [A4LD / 4R44E / 4R55E] (Stator) (Front) (Teflon) 1985-96	1	3L2Z-7L323-AA
179	56228	Ring, [C-3] (Direct Drum) (2.354"OD) (Metal) 1974-87	2	D4ZZ-7D025-A
179	56228D	Ring, [5R55E] (Overdrive & Direct Drum) (Vespel) 1997-Up	2-4	
179	56228T	Ring, [A4LD / 4R44E / 4R55E] (Overdrive & Direct Drum) (2.354"OD) (Teflon) 1985-Up	2-4	E5TZ-7D025-A
179	56228V	Ring, [A4LD] (Direct Drum) (.083" Wide) (2.354"OD) (Viton) 1985-92	2	E5TZ-7D0429-A
179	56228C	Ring, [A4LD / 4R44E / 4R55E] (Direct Drum) (.102" Wide) (2.354"OD) (Viton) 1993-Up	2	F3TZ-7D429-A
181	56227	Ring, [C-3 / A4LD / 4R44E / 4R55E] (Forward Drum) (1.496"OD) (Metal) 1974-96	2	D4ZZ-7D019-A
181	56227A	Ring, [4R44E / 4R55E / 5R55E] (Forward Clutch) (1.576"OD) (Peek) 1997-Up	2	F77Z-M154-CA
189	56645	Ring, [C-3] (Governor) (2.340"OD) (Metal-Cast Iron) 1974-87	3	F0TZ-7D011-A
189	56645V	Ring, [A4LD] (Governor) (2.340"OD) (Viton) 1985-89	3	
189	56645C	Ring, [A4LD / 4R44E / 4R55E] (Governor) (2.340"OD) (Seal Plated) 1985-Up	3	E7TZ-7D011-A
		WASHERS & BEARINGS		
	K56907	Washer Kit, [C-3] 1974-87	1	
	K56907D	Washer Kit, [A4LD] 1985-90	1	
	K56907H	Washer Kit, [A4LD / 4R44E / 4R55E] 1990-96	1	
	K56907J	Washer Kit, [4R44E / 5R55E / 5R44E] 1997-Up	1	
	K56209X	Shim Kit, [C-3 / A4LD / 4R44E / 4R55E] (Pump / Center Support Washer)	1	
211	56209A	Washer, [C-3 / A4LD] (Pump / Center Support) (.047") (Plastic) 1986-96	1	
211	56221	Washer, [C-3 / A4LD] (Pump / Center Support) (.055") (Metal) 1986-96	1	F0TZ-7D014-A
211	56236A	Washer, [4R44E / 4R55E] (Pump / Center Support) (.055") (Plastic) 1997-Up	1	F7TZ-7D014-VA
211	56222	Washer, [C-3 / A4LD] (Pump / Center Support) (.063") (Metal) 1986-96	1	F0TZ-7D014-B
211	56236B	Washer, [4R44E / 4R55E] (Pump / Center Support) (.063") (Plastic) 1997-Up	1	F7TZ-7D014-TA
211	56223	Washer, [C-3 / A4LD] (Pump / Center Support) (.067") (Metal) 1986-96	1	F0TZ-7D014-C
211	56236C	Washer, [4R44E / 4R55E] (Pump / Center Support) (.069") (Plastic) 1997-Up	1	
211	56224	Washer, [C-3 / A4LD] (Pump / Center Support) (.071") (Metal) 1986-96	1	F0TZ-7D014-D
211	56236D	Washer, [4R44E / 4R55E] (Pump / Center Support) (.071") (Plastic) 1997-Up	1	F7TZ-7D014-MA
211	56225	Washer, [C-3 / A4LD] (Pump / Center Support) (.075") (Metal) 1986-96	1	F0TZ-7D014-E
211	56236E	Washer, [4R44E / 4R55E] (Pump / Center Support) (.075") (Plastic) 1997-Up	1	F7TZ-7D014-NA
211	56226	Washer, [C-3 / A4LD] (Pump / Center Support) (.079") (Metal) 1986-96	1	F0TZ-7D014-F
211	56236F	Washer, [4R44E / 4R55E] (Pump / Center Support) (.079") (Plastic) 1997-Up	1	F7TZ-7D014-PA
211	56226A	Washer, [C-3 / A4LD] (Pump / Center Support) (.083") (Metal) 1986-96	1	F0TZ-7D014-G
211	56236G	Washer, [4R44E / 4R55E] (Pump / Center Support) (.083") (Plastic) 1997-Up	1	F7TZ-7D014-RA
211	56226B	Washer, [C-3 / A4LD] (Pump / Center Support) (.087") (Metal) 1986-96	1	F0TZ-7D014-H
211	56236H	Washer, [4R44E / 4R55E] (Pump / Center Support) (.087") (Plastic) 1997-Up	1	F7TZ-7D014-SA
211	56226C	Washer, [C-3 / A4LD] (Pump / Center Support) (.094") (Metal) 1986-96	1	F0TZ-7D014-J
211	56209D	Washer, [C-3 / A4LD] (Pump / Center Support) (.094") (Plastic) 1986-96	1	
211	56226D	Washer, [C-3 / A4LD] (Pump / Center Support) (.102") (Metal) 1986-96	1	F0TZ-7D014-K
211	56209E	Washer, [C-3 / A4LD] (Pump / Center Support) (.110") (Plastic) 1986-96	1	
211	56226E	Washer, [C-3 / A4LD] (Pump / Center Support) (.110") (Metal) 1986-96	1	F0TZ-7D014-L
211	56219A	Bearing W/Races, [4R44E / 4R55E] (Center Support) (.110") (Rear) 1995-96 (2.382"ID) (*Also Fits [A4LD / 4R44E / 4R55E] (Center Support) (Front) 1993-96	1-2	F3TZ-7L326-A
211	56219B	Bearing W/Races, [4R44E / 4R55E] (Center Support) (.116") (Rear) 1995-96 (2.382"ID)	1	F5TZ-7L326-A
211	56219C	Bearing W/Races, [4R44E / 4R55E] (Center Support) (.124") (Rear) 1995-96 (2.382"ID)	1	F5TZ-7L326-B
211	56219D	Bearing W/Races, [4R44E / 4R55E] (Center Support) (.132") (Rear) 1995-96 (2.382"ID)	1	F5TZ-7L326-C

C-3/A4LD/4R44E/4R55E/5R55E

211	56235A	Bearing W/Races, [5R55E] (Pump / Center Support) (Rear) (.110") 1997-Up (2.450"ID)	1	F77Z-7D014-GA
211	56235B	Bearing W/Races, [5R55E] (Pump / Center Support) (Rear) (.116") 1997-Up (2.450"ID)	1	F77Z-7D014-HA
211	56235C	Bearing W/Races, [5R55E] (Pump / Center Support) (Rear) (.124") 1997-Up (2.450"ID)	1	F77Z-7D014-KA
211	56235D	Bearing W/Races, [5R55E] (Pump / Center Support) (Rear) (.131") 1997-Up (2.450"ID)	1	F77Z-7D014-LA
214	56233	Washer, [A4LD / 4R44E / 4R55E / 5R55E] (Overdrive Sun Gear Drive) "Star Washer"	1	E5TZ-7660-A
216	56229A	Race, [A4LD / 4R44E / 4R55E] (Overdrive Planet to Overdrive Sun Gear) (Front) 85-96	1	E5TZ-7D235-B
216	56229C	Bearing W/Races, [4R44E / 4R55E / 5R55E] (Overdrive Planet to Overdrive Sun Gear) (Stays In Planet) 1997-Up	1	
217	56220	Bearing, [A4LD / 4R44E / 4R55E / 5R55E] (Between Overdrive Planet & Overdrive Ring Gear Hub)	1	1W4Z-7L495-A
218	56245	Needle Bearing, [A4LD / 4R44E / 4R55E] (*Fits on Nose of Overdrive Planet)	1	
220	56218	Washer, [A4LD] (Overdrive Planet to Sprag) (Retainer) 1985-92	1	E7TZ-7L339-A
223	56219	Washer, [A4LD] (Center Support) (Front) (2-Inner Tabs) 1985-92	1	E5TZ-7L326-A
223	56219A	Bearing W/Races, [A4LD / 4R44E / 4R55E] (Center Support) (Front) 1993-96	1	
223	56241	Bearing W/Races, [4R44E / 4R55E / 5R55E] (Center Support) (Front) 1997-Up (*Also [5R55E] (Forward Drum to Direct Drum) 1997-Up (*Also [4R44E / 4R55E / 5R55E] (Rear Planet to Hub) 1997-Up	1-3	F7TZ-7M153-EB
226	56231A	Bearing W/Races, [A4LD / 4R44E / 4R55E] (Center Support to Forward Drum) (.157") (1-Notch) 1993-95	1	F3TZ-7C096-A
226	56231B	Bearing W/Races, [A4LD / 4R44E / 4R55E] (Center Support to Forward Drum) (.149") (2-Notch) 1993-95	1	F3TZ-7C096-B
226	56231C	Bearing W/Races, [A4LD / 4R44E / 4R55E] (Center Support to Forward Drum) (.143") (3-Notch) 1993-95	1	F3TZ-7C096-C
226	56231D	Bearing W/Races, [A4LD / 4R44E / 4R55E] (Center Support to Forward Drum) (.135") (4-Notch) 1993-95	1	F3TZ-7C096-D
229	56210	Washer, [C-3 / A4LD / 4R44E / 4R55E] (Direct Drum to Forward Drum) (Metal)	1	E5TZ-7C096-A
229	56210A	Washer, [C-3 / A4LD] (Direct Drum to Forward Drum) (Plastic) (*Cast Iron Direct Drums Only)	1	D4ZZ-7C096-A
229	56241	Bearing W/Races, [5R55E] (Forward Drum to Direct Drum) 1997-Up	1	
231	56211	Washer, [C-3 / A4LD] (Between Forward Drum & Hub) (4-Inner Tabs) (Brass) 1974-89	1	D4ZZ-7D090-B
232	56217	Washer, [C-3 / A4LD] (Between Forward Drum & Hub) (3-Outer Tabs) 1974-89	1	D4ZZ-7D090-A
232	56211C	Washer (Integral), [A4LD] (Between Forward Drum & Hub) (No Tangs) (Cup Washer Type)	1	
232	56211D	Washer, [A4LD / 4R44E /4R55E / 5R55E] (Bearing to Planet) (.350" Thick) (3rd Design) (Solid Bronze)	1	F0TZ-7D090-A
232	56234	Bearing W/Races, [A4LD / 4R44E /4R55E / 5R55E] (Forward Drum to Planet) (*Bearing & Races Snap Together as 1-Piece)	1	F3TZ-7D234-A
235	56213	Washer, [C-3 / A4LD] (Forward Planet to Hub)	1	
235	56214	Bearing W/Race, [A4LD / 4R44E / 4R55E / 5R55E] (Between Forward Planet & Hub)	1	F2TZ-7F374-A
239	56229	Race, [C-3 / A4LD] (Forward Planet to Sun Gear)	1	E5TZ-7D235-A
243	56215	Race, [C-3 / A4LD / 4R44E / 4R55E] (Between Sun Shell & Rear Planet Washer) 85-96	1	D4ZZ-7D066-A
244	56213	Washer, [C-3 / A4LD] (Rear Planet to Shell) (2-3/4"OD) (6-Outer Tabs) 1974-E89 (*Also Fits Forward Planet to Hub) (*Also Fits Rear Planet to Hub)	1-3	D4AZZ-7A166-A
244	56213C	Washer, [A4LD / 4R44E / 4R55E] (Rear Planet to Shell) (3-Outer Tabs) L1989-96	1	F0TZ-7A166-B
244	56237	Bearing W/Races, [4R44E / 4R55E / 5R55E] (Rear Planet to Shell) 1997-Up	1	F7ZZ-7M151-BA
251	56213	Washer, [A4LD / 4R44E / 4R55E] (Rear Planet to Hub) (2-3/4"OD) (6-Outer Tabs) 85-E89	1	
251	56213B	Washer, [A4LD / 4R44E / 4R55E] (Rear Planet to Hub) (3"OD) (6-Outer Tabs) L1989-96	1	F0TZ-7A166-A
251	56241	Bearing W/Races, [4R44E / 4R55E / 5R55E] (Rear Planet to Hub) 1997-Up	1	
254	56212	Washer, [C-3 / A4LD] (Between Rear Hub & Sprag Race) (2-1/4"OD) (Metal) 1974-E89	1	F0TZ-7DA22-A
254	56212A	Washer, [A4LD / 4R44 / 4R55E] (Between Rear Hub & Sprag Race) (3-3/16"OD) (Bronze) L1989-96	1	F0TZ-7D422-A
254	56240	Race, [4R44E / 4R55E / 5R55E] (Rear Hub to Sprag Race) (Steel) (Snaps on the Rear Hub) (With Bronze Inner Ring) 1997-Up	1	F7ZZ-7M150-DA

254	56239	Bearing, [4R44E /4R55E / 5R55E] (Rear Hub Race to Sprag Race) (*Goes With 56240) 1997-Up	1	F7ZZ-7M150-CA
257	56250	Washer, [A4LD / 4R44E / 4R55E / 5R55E] (Rear Case Thrust) (4.0L) L1989-Up	1	
257	56250-01K	Washer & End Cap Kit, [A4LD] (Rear Sprag Inner Race Washer & 2 Sprag End Caps) (4.0L)	1	Sonnax
	56245A	Caged Needle Bearing, [5R55E] (Reverse Drum) 1997-Up	1	
263	56216	Washer, [C-3 / A4LD / 4R44E / 4R55E / 5R55E] (Between Governor Support & Case)	1	D4ZZ-7B368-A
264	56887	Caged Needle Bearing, [5R55E] (Case to Output Shaft) (Cast # F-222722)	1	F77Z-7R205-AA
		GASKETS & RUBBER COMPONENTS		
300	56265	Gasket, [C-3] (Bottom Pan) 1974-Up	1	D5ZZ-7A191-B
300	56265F	Gasket, [C-3] (Bottom Pan) (Fiber) (Farpack) 1974-Up	1	
300	56500	Gasket, [A4LD / 4R44E / 4R55E / 5R55E] (Bottom Pan) 1985-Up	1	E5TZ-7A191-A
300	56500D	Gasket, [A4LD / 4R44E / 4R55E / 5R55E] (Bottom Pan) (Fiber) (Duraprene) 1985-Up	1	
305	56272	Gasket, [C-3 / A4LD / 4R44E / 4R55E / 5R55E] (Extension Housing) 1974-Up	1	D4ZZ-7086-B
307	56269	Gasket, [C-3 / A4LD /4R44E / 4R55E / 5R55E] (Reverse Servo Cover) 1974-Up	1	D4ZZ-7L173-A
309	56777	Washer, [C-3 / A4LD] (Pump Bolt) 1974-89	8	E830124-S
309	56777A	O-Ring, [A4LD / 4R44E / 4R55E / 5R55E] (Pump Bolt) 1990-Up	8	E0804595-S200
310	56276	Gasket, [C-3 / A4LD / 4R44E / 4R55E] (Pump) 1974-Up	1	F5TZ-7A136-A
311	56274	O-Ring, [C-3 / A4LD / 4R44E / 4R55E] (Pump) 1974-Up	1	D5ZZ-78A248-A
313	56128	O-Ring, [A4LD / 4R44E / 4R55E / 5R55E] (Inner Pump Gear) 1995-Up	1	W701431-S300
320	56267	Gasket, [C-3] (Valve Body) (Upper) 1974-Up	1	D4ZZ-7D100-B
320	56287	Gasket, [A4LD] (Valve Body) (Upper) 1985-Up	1	E8TZ-7C155-A
320	56287X	Gasket, [A4LD] (Valve Body) (Upper) (.015” Thick) (Oversize) 1985-Up	1	
320	56587A	Gasket, [4R44E / 4R55E / 5R55E] (Valve Body) (Upper) 1995-Up	1	
321	56266	Gasket, [C-3] (Valve Body) (Lower) 1974-Up	1	D4ZZ-7D100-A
321	56280	Gasket, [A4LD] (Valve Body) (Lower) 1985-Up	1	E8TZ-7D100-A
321	56280X	Gasket, [A4LD] (Valve Body) (Lower) (.015” Thick) (Oversize) 1985-Up	1	
321	56280A	Gasket, [4R44E / 4R55E / 5R55E] (Valve Body) (Lower) 1995-Up	1	
326	56268	Gasket, [C-3] (Filter) 1974-Up	1	D5ZZ-7E062-A
334	56120	Lathe Cut Seal, [C-3 / A4LD / 4R44E / 4R55E / 5R55E] (Forward Clutch) (Inner) 1974-Up	1	XL2Z-7A548-BA
335	56126	Lathe Cut Seal, [C-3 / A4LD / 4R44E / 4R55E / 5R55E] (Forward Clutch) (Outer) 74-Up	1	XL2Z-7A548-AA
336	56110A	Lathe Cut Seal, [C-3 / A4LD] (Direct Clutch) (Inner) 1974-87 (*Also Overdrive Clutch) (Inner) 1985-87	2	D7ZZ-7D404-A
336	56110	Lip Seal, [A4LD / 4R44E / 4R55E / 5R55E] (Direct & Overdrive Clutch) (Inner) 1988-05	2	E8TZ-7D404-A
337	56116A	Lathe Cut Seal, [A4LD] (Direct & Overdrive Clutch) (Outer) 1985-87	2	D7ZZ-7A548-A
337	56116	Lip Seal, [A4LD] (Direct Clutch) (Outer) 1987-89 (*Also [4R44E / 4R55E / 5R55E] (Direct Clutch) (Outer) 1995-05 (*Also [A4LD / 4R44E / 4R55E] (Overdrive Clutch) (Outer) 88-05	2	E8TZ-7A548-A
337	56116B	Lip Seal, [A4LD / 4R44E / 4R55E] (Overdrive Clutch) (Outer) 1990-Up	1	F77Z-7A548-AA
349	3499	O-Ring, [C-3 / A4LD] (Throttle Shaft) (No Lobes) 1974-Up	1	
349	3499A	O-Ring, [C-3 / A4LD] (Throttle Shaft) (With 4-Lobes) 1974-Up	1	
362	56273	Lathe Cut Seal, [C-3] (Intermediate Servo Cover) 1974-78 (*Also [A4LD] Intermediate & Overdrive Servo Cover) 1985	1-2	D4ZZ-7D040-A
362	56273A	O-Ring, [A4LD / 4R44E / 4R55E / 5R55E] (Intermediate & Overdrive Servo) 1986-Up	2	E6TZ-7D040-A
363	3435	O-Ring, [C-3 / A4LD / 4R44E / 4R55E / 5R55E] (Reverse Servo Seal) (Small) 1974-Up	1	D4ZZ-7423-B
363	3475	O-Ring, [C-3 / A4LD / 4R44E / 4R55E / 5R55E] (Reverse Servo Seal) (Large) 1974-Up	1	D4ZZ-7423-A
371	3291	O-Ring, [C-3 / A4LD / 4R44E / 4R55E / 5R55E] (Filler Tube) 1974-Up	1	6264902
377	76521	O-Ring, [C-3 / A4LD] (Neutral Safety Switch) 1977-95	1	87009-S100
379	56283	O-Ring, (Filter) (Small) 1985 Only*	1	E5TZ-7A469-B
379	56283A	O-Ring, [A4LD / 4R44E / 4R55E / 5R55E] (Filter O-Ring) (Small) 1986-Up	1	E6TZ-7A469-B

C-3/A4LD/4R44E/4R55E/5R55E

379	56282	O-Ring, (Filter) (Large) 1985 Only*	1	E5TZ-7A469-A
379	56282A	O-Ring, [A4LD / 4R44E / 4R55E / 5R55E] (Filter O-Ring) (Large) 1986-Up	1	E6TZ-7A469-A
	13222A	Hockey Puck, [C-3] (Intermediate Accumulator Check Valve Seal) (Rubber) 1964-86	1	
	56947-14K	Orifice Puck, [A4LD / 4R44E / 4R55E / 4R55E / 5R55E] (Intermediate Accumulator Check Valve Seal Kit) (Includes: 2-Small, 1-Med, 3-Large End Plugs and O-Rings)	1	Sonnax
		TECHNICAL MANUALS		
	TMA4LD	Technical Manual, [A4LD]	1	ATSG
	TM4R44E	Technical Manual, [4R44E / 4R55E] (Electric) 1995-Up	1	ATSG
	TM5R55E	Technical Manual, [5R55E] (5 Speed) 1997-Up	1	ATSG
		ELECTRICAL COMPONENTS		
410	56991	Switch, [A4LD] (Neutral Safety) (5-Pin) 1985-95	1	E6TZ-7A247-A
410	56991A	Switch, [C-3 / A4LD] (Neutral Safety) (4-Pin) 1977-95	1	D6RY-7A247-B
	76991	Switch, [4R44E / 4R55E / 5R55E] (Neutral Safety) (8-Pin) 1992-97	1	F5AZ-7A247-AA
	76991B	Switch, [4R44E / 4R55E / 5R55E] (Neutral Safety) (11 or 12-Pin) 1997-Up	1	F7LZ-7F293-AA
	36955WH	Repair Harness, [4R44E / 4R55E / 5R55E] (MLPS) (With 8-Pin Connector)	1	
	36955AWH	Repair Harness, [4R44E / 4R55E / 5R55E] (MLPS) (With 11 or 12-Pin Connector)	1	
	K56837B	Solenoid Kit, [A4LD] (Lock-Up & 3-4 Shift Solenoid) (3-Pin Connector) 1989-95	1	Rostra
	MS-A4LD	Solenoid Kit, [A4LD] (Lock-Up & 3-4 Shift Solenoid) 1985-95	1	Teckpak
	K56837	Solenoid Kit, [A4LD] (Lock-Up & 2-Prong Connector) 1985-88 (*For 1-Solenoid Valve Body)	1	Rostra
421	56841	Solenoid, [4R44E / 4R55E / 5R55E] (Shift) 1995-Up	1-4	F7TZ-7F293-AA
	56836B	Solenoid, [A4LD] (3-4 Shift) 1985-Up	1	E8TZ-7M107A
	K56836B	Solenoid, [A4LD] (3-4 Shift) (All) 1985-Up	1	Teckpak
425	56836	Solenoid, [A4LD] (TCC) 1985-95	1	E5TZ-7F037-A
425	56843	Solenoid, [4R44E] (TCC) 1995-96	1	F5TZ-7F037-AA
425	56843A	Solenoid, [4R44E / 4R55E / 5R55E] (TCC) 1997-Up	1	F77Z-7G136-AA
431	56842	Solenoid, [4R44E / 4R55E] (EPC) (Green Screen) 1995-96	1	F5TZ-7H144-A
431	56842A	Solenoid, [4R44E / 4R55E / 5R55E] (EPC) (Red Screen) 1997-Up	1	XL2Z-7G383-AA
436	56846	Sensor, [4R44E / 4R55E / 5R55E] (Output Speed) 1997-Up (In Rear of Case)	1	F7RZ-7H103-AA
438	56845	Sensor, [4R44E / 4R55E / 5R55E] (Input Speed) 1995-Up (Under Center Support)	1	F5TZ-7M101-A
439	56973	Sensor, [5R55E] (Overdrive Drum) (Front Case) 1997-Up	1	XW4Z-7M183-AA
	36951C	Sensor, [4R44E / 4R55E / 5R55E] (VSS) (Mounts in Differential Housing)	1	
444	56837	Connector, [A4LD] (Case) (2-Prong) (*Fits 1-Switch Valve Body) 1985-88	1	E5TZ-7E449-A
444	56837B	Connector, [A4LD] (Case) (3-Prong) (*Fits 2-Switch Valve Body) 1989-95	1	E7TZ-7E449-A
	56839	Wire Harness, [4R44E / 4R55E / 5R55E] (Internal) (16-Prong Connector)	1	F5TZ-7Z409-B
		MISC. COMPONENTS		
	26710	Grommet, [C-3 / A4LD / 4R44E / 4R55E / 5R55E] (Shift Linkage Grommet) (5/16"ID)	1	D5AZ-7341-A
	26713	Grommet, [C-3 / A4LD / 4R44E / 4R55E / 5R55E] (Passing Gear) (Narrow Groove) (Green)	1	
		HARD PARTS		
520	56200	Stator, [C-3] (With Gears) 1974-87	1	D6ZZ-7A103-A
520	56200D	Stator, [A4LD] (With Gears) (Hex Head Bolts) 1985-87	1	E5TZ-7A103-A
520	56200E	Stator, [A4LD] (With Gears) (Allen Head Bolts) (Rear Bushing Is 1-1/4" From Rear of Stator) 1988-90	1	F0TZ-7A103-A
520	56200F	Stator, [A4LD] (With Gears) (Allen Head Bolts) (Rear Bushing Is 1/2" From Rear of Stator) 1990-95	1	
520	56200G	Stator, [4R44E / 4R55E] (With Gears) (6-Bolt Electronic) 1995-96	1	F5TZ-7A103-B
520	56200H	Stator, [5R55E] (With Gears) (24 Teeth Inner Gear) (With Outer Caged Bearing) 1997-Up	1	F77Z-7A103-CA
520	56200HA	Stator, [5R55E] (With Gears) (16 Teeth Inner Gear) (With Outer Caged Bearing)	1	XL2Z-7A103-AA

C-3/A4LD/4R44E/4R55E/5R55E

530	K56201	Pump Gears, [C-3 / A4LD / 4R44E / 4R55E] 1974-94	1	4DT-7L201
530	K56201X	Pump Gears, [C-3 / A4LD / 4R44E / 4R55E] (Oversized) (3.710"OD x .511" Thick) 1974-Up	1	
530	K56201A	Pump Gears, [4R44E / 4R55E / 5R55E] (With Inner O-Ring) (24 Teeth on Inner Gear) 1995-Up	1	
530	K56201B	Pump Gears, [5R55E] (16 Teeth Inner Gear) (With O-Ring)	1	
544	56202	Plate, [C-3] (Pump) 1974-87	1	E5TZ-7B472-B
544	56202A	Plate, [A4LD] (Pump) (*Uses Hex Head Pump Bolts) 1985-87	1	E5TZ-7B472-B
544	56202B	Plate, [A4LD] (Pump) (*Uses Allen Head Pump bolts) 1988-95	1	F0TZ-7B472-B
544	56202C	Plate, [4R44E / 4R55E / 5R55E] (Pump) (6-Bolt Electric) 1995-Up	1	F5TZ-7B472-A
550	56284A	Drum, [A4LD] (Overdrive) (3 Clutch) 1985-E89	1	E9TZ-7L669-A
550	56284AA	Drum, [A4LD] (Overdrive) (2 Clutch) 1985-E89	1	D4ZZ-7A248-A
550	56284B	Drum, [A4LD / 4R55E] (Overdrive) (3 Clutch) L1989-95	1	F0TZ-7L669-A
550	56284C	Drum, [A4LD / 4R44E] (Overdrive) (2 Clutch) 1995-1/97	1	
550	56284D	Drum, [5R55E] (Overdrive) (2 Clutch) 1/1997-Up	1	
554	56400	Drum, [C-3] (Forward Clutch) (4 Clutch) 1974-77	1	D5ZZ-7A360-A
554	56400A	Drum, [C-3] (Forward Clutch) (5 Clutch) 1978-87	1	D8ZZ-7A360-A
554	56400C	Drum, [A4LD] (Forward Clutch) (4 Clutch) 1985-E89	1	F0TZ-7A360-A
554	56400B	Drum, [A4LD] (Forward Clutch) (5 Clutch) 1990-96	1	E5TZ-7A360-A
554	56400BA	Drum, [A4LD] (Forward Clutch) (4 Clutch) 1990-96	1	F0TZ-7A360-A
554	56400D	Drum, [A4LD / 4R55E] (Forward Clutch) (6 Clutch) (4.0L) 1990-96	1	F0TZ-7D044-A
554	56400E	Drum, [5R55E] (Forward Clutch) (4 Clutch) (With Caged Outer Bearings Between Rings) 1997-Up	1	
554	56400EA	Drum, [5R55E] (Forward Clutch) (5 Clutch) (With Caged Outer Bearings Between Rings) 1997-Up	1	
554	56400EB	Drum, [5R55E] (Forward Clutch) (6 Clutch) (With Caged Outer Bearings Between Rings) 1997-Up	1	
555	56300	Drum, [C-3] (Direct Clutch) (4 Cylinder) 1974-77	1	
555	56300A	Drum, [C-3] (Direct Clutch) (V-6) 1975-77	1	D5FZ-7D044-A
555	56300B	Drum, [C-3] (Direct Clutch) 1978-87	1	D8ZZ-7D044-C
555	56300C	Drum, [A4LD] (Direct Clutch) (4 Clutch) (Steel) 1985-E89	1	E5TZ-7D044-F
555	56300CA	Drum, [A4LD] (Direct Clutch) (5 Clutch) (Steel) 1985-E89	1	E5TZ-7D044-E
555	56300DB	Drum, [A4LD] (Direct Clutch) (4 Clutch) (Steel) L1989-Up	1	
555	56300DC	Drum, [A4LD] (Direct Clutch) (4 Clutch) (Steel) (With 2-Square Slots For Shell Locking Lugs) 1993-96 (*Some)	1	
555	56300D	Drum, [A4LD] (Direct Clutch) (5 Clutch) (Steel) L1989-Up	1	E5TZ-7D044-E
555	56300DA	Drum, [A4LD] (Direct Clutch) (5 Clutch) (Steel) (With 2-Square Slots For Shell Locking Lugs) 1993-96 (*Some)	1	
555	56300EA	Drum, [A4LD] (Direct Clutch) (5 Clutch) (Cast Iron) (.150" Thick Lugs) L1989-96 (*Uses a 4-1/2"OD Piston With Cast # 90DT)	1	F0TZ-7D044-C
555	56300FA	Drum, [A4LD] (Direct Clutch) (5 Clutch) (Cast Iron) (.350" Thick Lugs) L1989-96 (*Uses a 4-1/2"OD Piston With Cast # 90DT)	1	
555	56300EC	Drum, [A4LD / 4R44E] (Direct Clutch) (4 Clutch) (Cast Iron) (.150" Thick Lugs) L1989-96	1	F0TZ-7D044-B
555	56300FC	Drum, [A4LD / 4R44E] (Direct Clutch) (4 Clutch) (Cast Iron) (.350" Thick Lugs) L1989-96	1	
555	56300EB	Drum, [A4LD / 4R44E] (Direct Clutch) (5 Clutch) (Cast Iron) (.150" Thick Lugs) 1989-96 (*Uses a 4-1/4"OD Piston With Cast # 88DT)	1	F0TZ-7D044-C
555	56300FB	Drum, [A4LD / 4R44E] (Direct Clutch) (5 Clutch) (Cast Iron) (.350" Thick Lugs) 1989-96 (*Uses a 4-1/4"OD Piston With Cast # 88DT)	1	
555	56300E	Drum, [A4LD / 4R55E] (Direct Clutch) (6 Clutch) (Cast Iron) (.150" Thick Lugs) (2.9L & 3.0L) L1989-96	1	
555	56300F	Drum, [A4LD / 4R55E] (Direct Clutch) (6 Clutch) (Cast Iron) (.350" Thick Lugs) (4.0L) L1989-96	1	F0TZ-7D044-C
555	56300G	Drum, [5R55E] (Direct Clutch) (4 Clutch) (Cast Iron) 1997-Up (*Uses a 4-1/4"OD Piston With Cast # 88DT)	1	

C-3/A4LD/4R44E/4R55E/5R55E

555	56300GA	Drum, [5R55E] (Direct Clutch) (5 Clutch) (Cast Iron) 1997-Up (*Uses a 4-1/4"OD Piston With Cast # 88DT)	1	
555	56300GB	Drum, [5R55E] (Direct Clutch) (6 Clutch) (Cast Iron) 1997-Up (*Uses a 4-1/4"OD Piston With Cast # 88DT)	1	
555	56300H	Drum, [5R55E] (Direct Clutch) (4 Clutch) (Cast Iron) 1997-Up (*Uses a 4-1/2"OD Piston With Cast # 90DT) 1997-Up	1	
555	56300HA	Drum, [5R55E] (Direct Clutch) (5 Clutch) (Cast Iron) 1997-Up (*Uses a 4-1/2"OD Piston Cast # 90DT) 1997-Up	1	
555	56300HB	Drum, [5R55E] (Direct Clutch) (6 Clutch) (Cast Iron) 1997-Up (*Uses a 4-1/2"OD Piston Cast # 90DT)	1	
556	56510	Drum, [C-3 / A4LD / 4R44E] (Reverse Band) (Less Sprag) (*Uses Roller Type Sprag) (10-Lugs)	1	D4ZZ-7C498-A
556	56510A	Drum, [A4LD / 4R55E] (Reverse Band) (4.0L) (With Lug Type Sprag) (30-Lugs For Rear Planet)	1	F0TZ-7C498-A
556	56510B	Drum, [5R55E] (Reverse Band With Needle Bearing) (With 16-Lug Sprag) (10-Lugs For Rear Planet)	1	
556	56510C	Drum, [5R55E] (Reverse Drum With Needle Bearing) (With 26-Lug Sprag) (10-Lugs For Rear Planet)	1	
580	56413	Planet, [A4LD] (Overdrive Without Reluctor Ring)	1	F2TZ-7B446-B
580	56413A	Planet, [4R44E /4R55E] (Overdrive With Reluctor Ring) (With 1-Piece Bearing # 216)	1	2L5Z-7B446-AA
582	56412	Planet, [C-3 / A4LD] (Forward) (Aluminum) (*Uses a Thrust Washer # 232) 1974-89	1	D4ZZ-7A398-A
582	K56412A	Planet Kit, [C-3 / A4LD] (Forward Planet) (Aluminum) (*Can Be Used In Any Forward Planet Early Type) (Contains: # 232, 881, 231, 882, 602, 592, 235 & 582)	1	
582	56412A	Planet, [A4LD / 4R44E] (Forward) (Steel) (3 Gear) 1986-96	1	E7TZ-7A398-A
582	K56412A	Planet Kit, [A4LD / 4R44E] (Forward) (Steel) (3 Gear) (*Can Use For All Planets) (Contains: # 232, 881, 231, 882, 602, 592, 235 & 582)	1	
582	56412B	Planet, [A4LD / 4R44E] (Forward) (Steel) (4 Gear) 1986-96	1	E8TZ-7A398-A
582	K56412B	Planet Kit, [A4LD / 4R44E] (Forward) (Steel) (4 Gear) (*Can Use For All Planets) (Contains: # 232, 881, 231, 882, 602, 592, 235 & 582)	1	
582	56412D	Planet, [A4LD / 4R55E] (Forward) (Steel) (6 Gear) (.350" Thick Brass Washer # 232) (3-Piece Bearing) 1990-96	1	F0TZ-7A398-B
582	56412E	Planet, [4R55E / 5R55E] (Forward) (Steel) (6 Gear) (*Uses Bearing # 232) (1-Piece Bearing) 1997-Up	1	XL2Z-7A398-AA
582	K56412D	Planet Kit, [A4LD / 4R55E / 5R55E] (Forward) (Steel) (6 Gear) (*Uses a Bearing # 232) (1-Piece Bearing Inside) 1990-Up (Contains: # 232, 602, 235 & 582) **(*Can Use For All Planets)**	1	F0TZ-7A398-E
584	56503	Planet, [C-3 / A4LD / 4R44E] (Rear) (Aluminum) (3 Gear) (10-Driving Lugs)	1	E7SZ-7D006-C
584	56503D	Planet, [A4LD / 4R44E] (Rear) (Steel) (3 Gear) (10-Driving Lugs)	1	
584	56503C	Planet, [A4LD / 4R44E] (Rear) (Steel) (4 Gear) (10-Driving Lugs)	1	E7SZ-7D006-C
584	56503B	Planet, [A4LD / 4R55E] (Rear) (Steel) (6 Gear) (10-Diving Lugs) (*Washer Type)	1	E7SZ-7D206-AA
584	56503A	Planet, [A4LD / 4R55E] (Rear) (Steel) (6 Gear) (30-Driving Lugs)	1	F0TZ-7D006-A
584	56503BA	Planet, [4R55E / 5R55E] (Rear) (Steel / Cast) (6 Gear) (10-Driving Lugs) (*Bearing Type)	1	XL2Z-7D006-AA
590	56506	Ring Gear, [A4LD] (Overdrive Planet) (*Used With Steel Caged Sprag)	1	E5TZ-7A153-A
590	56506A	Ring Gear, [A4LD / 4R44E /4R55E / 5R55E / 5R55N] (Overdrive Planet) (*For Plastic Cage Sprag & 24 Teeth Sun Gear)	1	F3TZ-7A153-A
592	56409	Ring Gear, [C-3 / A4LD] (Forward Planet) (Clutch Spline Length is 1-1/4") 1974-Up	1	D4ZZ-7D392-A
592	56409A	Ring Gear, [A4LD / 4R44E / 4R55E / 5R55E] (Forward Planet) (Clutch Spline Length Is 1-5/8")	1	
594	56410	Ring Gear, [C-3 / A4LD / 4R44E / 4R55E / 5R55E] (Rear Planet) 1974-Up	1	D4ZZ-7A153-A
602	56426	Hub, [C-3 / A4LD] (Forward Ring Gear) (57 Teeth) (*Uses a Washer # 235)	1	
602	56426A	Hub, [A4LD] (Forward Ring Gear) (57 Teeth) (*Uses a Bearing # 235) (1.500"ID) 85-E87	1	
602	56426B	Hub, [A4LD] (Forward Ring Gear) (57 Teeth) (*Uses a Bearing # 235) (1.587"ID) L1987-Up	1	E7TZ-7B067-A
602	56426C	Hub, [A4LD / 4R44E / 4R55E / 5R55E] (Forward Ring Gear) (12 Small Teeth) L1987-Up	1	F8TZ-7B067-AC
602	56426D	Hub, [A4LD / 4R44E / 4R55E / 5R55E] (Forward Ring Gear) (4 Small Teeth) L1987-Up	1	

604	56505	Hub, [C-3 / A4LD] (Rear Ring Gear) (*For Aluminum Planet) 1974-96	1	F0TZ-7D164-B
604	56505B	Hub, [A4LD / 4R44E] (Rear Ring Gear) (For Steel Planet) 1985-96 (With 10-Lugs on Planet)	1	
604	56505A	Hub, [A4LD / 4R55E] (Rear Ring Gear) (*For Steel Planet W/Oil Dam) 1990-96 (With 30-Lugs on Planet)	1	F0TZ-7D164-C
604	56505C	Hub, [4R55E / 5R55E] (Rear Ring Gear) (For Steel Planet) 1997-Up	1	F77Z-7D164-AD
604	K56505C	Hub Kit, [A4LD / 4R44E / 4R55E / 5R55E] (Rear Ring Gear) (For Steel Planet) (1.590"OD Nose) (Contains: # 604, 223 & 254)	1	
610	56414	Sun Gear, [A4LD / 4R44E / 4R55E / 5R55E] (Overdrive) (24 Teeth) 1985-Up (*Also Fits 5R55N)	1	F7RZ-7D063-AA
612	56421	Sun Gear, [C-3 / A4LD / 4R44E] (Forward) (2-Bushing Type) 1974-Up	1	D4ZZ-7D063-A
612	56421A	Sun Gear, [A4LD / 4R55E / 5R55E] (Forward) (4.0L) (No Bushing Type) L1989-Up	1	F0TZ-7D063-A
622	56423	Shell, [C-3] (Driving) 1974-85	1	D4AA-7D064-A
622	56423A	Shell, [A4LD / 4R55E] (Driving) (Non-Snap Type) 1985-96	1	F0TZ-7D064-A
622	56423B	Shell, [A4LD] (Driving) (Snap-on Type) 1993-96	1	F3TZ-7D064-A
622	56423C	Shell, [5R55E] (Driving) 1997-2000	1	F77Z-7D064-BB
622	56423D	Shell, [5R44E / 5R55E] (Driving) (With 24-Holes For ISS) 2001-Up	1	
630	56219-02K	Bushing, [A4LD] (Center Support Replacement Bushing) **(*Use With 56219-04K Driver)**	1	Sonnax
630	56219-06K	Bushing & Driver, [A4LD] (Center Support For Replacement Bushing) **(*Use 56219-05K)**	1	Sonnax
630	56219-03K	Sleeve, [A4LD] (Center Support to Direct Drum) (Steel Presses onto the Center Support)	1	Sonnax
630	56952	Center Support, [A4LD] (*Does Not Use a Bearing #226) 1985-92	1	E5TZ-7A130-A
630	56952C	Center Support, [A4LD] (*4.0L Only) (Snap-on Type) 1993-95	1	F1TZ-7A130-AA
630	56952D	Center Support, [A4LD] (*Uses a Bearing #226) (Without Speed Sensor) 1993-95	1	F3TZ-7A130-B
630	56952A	Center Support, [A4LD / 4R44E / 4R55E] (*Uses a Bearing # 226) (With Speed Sensor) 1995-97	1	F5TZ-7A130-B
630	56952B	Center Support, [5R55E] (With Sensor) (Has Bearing Recess Outer Bearing In Ring Area) 1997-Up	1	F77Z-7A130-CB
		SPRAGS & ONE WAY CLUTCHES		
650	56961	Sprag, [A4LD] (Overdrive) (.406" Wide Lugs) (Metal Cage) 1985-92	1	E5TZ-7A089-A
650	56961A	Sprag, [A4LD / 4R44E / 4R55E] (Overdrive) (.406" Wide Lugs) (Plastic Cage) 1993-96	1	
650	56961B	Sprag, [4R44E /4R55E / 5R55E] (.460" Wide Lugs) (Plastic Cage, Brass Washer One Side) 1997-Up	1	50001BW
654	K56960	Sprag, [C-3 / A4LD / 4R44E] (Rear) (*Except 4.0L) 1974-Up (Spring & Roller Kit)	1	
654	56960A	Sprag, [A4LD / 4R55E] (Rear) (4.0L) (26-Lugs) (Plastic Cage, With 2-Brass Washers) L1989-96	1	
654	56960C	Sprag, [5R55E] (Rear) (26-Lugs) 1997-Up	1	50004BW
654	56960B	Sprag, [4R44E] (Rear) (16-Lugs) 1997-Up	1	50005BW
		HARD PARTS (Continued)		
664	56600	Inner Race, [C-3] (Rear Sprag) (Bolts In Case)	1	
664	56600A	Inner Race, [A4LD / 4R44E] (Rear Sprag) (Roller Sprag) (Presses In Case) 1985-96	1	
664	56600B	Inner Race, [A4LD / 4R55E / 5R55E] (Rear Sprag) (Lug Type Sprag) (4.0L) L1989-96	1	
664	56600B-01K	Sprag Update Kit, [A4LD] (Inner Race, Washer & 2-End Caps) (*Replaces Loose Sprag Inner Races 4.0L) (*Also Converts 2.8L, 2.9L, & 3.0L Cases to 4.0L)	1	Sonnax
	56600DJ	Drill Jig, [A4LD] (*For Removing Rear Inner Race)	1	Sonnax
670	56411	Input Shaft, [C-3 / A4LD] (9-7/8" Long) 1974-95	1	D4ZZ-7017-C
670	56411A	Input Shaft, [4R44E / 4R55E / 5R55E] (10" Long) 1995-Up	1	XL2Z-7017-AA
674	56958D	Center Shaft, [A4LD] (Overdrive) (Bushing Type) (With .443"OD Pilot) 1985-89	1	E5TZ-7A658-A
674	56958F	Center Shaft, [A4LD / 4R44E] (Overdrive) (Bearing Type) (With .395"OD Pilot) 1990-92 (*Except 4.0L) (*Uses Sprag With Metal Cage)	1	F2TZ-7A658-A
674	56958E	Center Shaft, [A4LD / 4R55E] (Overdrive 4.0L) (Bearing Type) (With .392"OD Pilot) 1990-96 (*Uses Sprag With Plastic Cage)	1	F2TZ-7A658-B

674	56958G	Center Shaft, [A4LD] (Overdrive) (Trucks 2.3L, 2.9L, 3.0L) 1992-96	1	
674	56958H	Center Shaft, [A4LD] (Overdrive) (Trucks 4.0L) 1992-96	1	
674	56958J	Center Shaft, [5R55E] (Overdrive) (*Uses 24 Teeth Sun Gear) 1997-Up	1	XL2Z-7A658-AA
678	56655	Output Shaft, [C-3] (2WD)	1	E3TZ-7060-C
678	56655B	Output Shaft, [A4LD] (2WD) (Bushing Type) (Speed-O Gear Is 6-1/2" From Rear End of Shaft)	1	E9TZ-7060-D
678	56655CA	Output Shaft, [A4LD] (2WD) (Bushing Type) (Speed-O Gear Is 3-1/2" From Rear End of Shaft) (With Bolt-on Yoke)	1	
678	56655C	Output Shaft, [A4LD] (2WD) (Bushing Type) (Speed-O Gear Is 4-7/8" From Rear End of Shaft) (With Bolt-on Yoke)	1	
678	56655A	Output Shaft, [A4LD] (4x4) (Bushing Type) (13-57/64" Long) 1987-91	1	E9TZ-7060-E
678	56655CA	Output Shaft, [A4LD / 4R44E] (2WD) (Bearing Type) (Speed-O Gear Is 4-7/8" From Rear End of Shaft) (*Used With Sun Gear With 2-Bushings)	1	
678	56655D	Output Shaft, [A4LD / 4R44E] (2WD) (Bearing Type) (Speed-O Gear Is 6-1/2" From Rear End of Shaft) (*Used With Gear With 2-Bushings)	1	
678	56655E	Output Sahft, [A4LD / 4R44E] (2WD) (Bearing Type) (Speed-O Gear Is 6-1/2" From Rear End of Shaft) (*Used With Sun Gear With 2-Bushings) (With Bolt-on Yoke)	1	
678	56655F	Output Shaft, [A4LD / 4R44E] (4x4) (Bearing Type) (*Used With Sun Gear With 2- Bushings) 1992-95	1	
678	56655J	Output Shaft, [A4LD / 4R55E] (2WD) (Bearing Type) (Speed-O Gear Is 4-7/8" From Rear End of Shaft) (*Used With Gear With No Bushings) 1990-Up	1	
678	56655EA	Output Shaft, [A4LD / 4R55E] (2WD) (Bearing Type) (Speed-O Gear Is 6-1/2" From Rear End of Shaft) (*Used With Sun Gear No Bushings)	1	
678	56655FA	Output Shaft, [4R55E / 5R55E] (4x4) (Bearing Type) (*Used With Sun Gear With No Bushings)	1	
678	56655EB	Output Shaft, [4R55E / 5R55E] (2WD) (Bearing Type) (*Used With Sun Gear With No Bushings) (Has No Speed-O Gear)	1	
680	56615	Governor, [C-3] (4-Bolt) 1974-87	1	D9ZZ-7C063-A
680	56615A	Governor, [A4LD] (Small Land on Valve Is .385"OD) (Valve Has 1-Groove)	1	D8ZZ-7C063-A
680	56615B	Governor, [A4LD] (Small Land on Valve Is .385"OD) (Valve Has 2-Grooves)	1	
680	56615C	Governor, [A4LD] (Small Land on Valve Is .385"OD) (Valve Has 3-Grooves)	1	
680	56615AA	Governor, [A4LD] (Small Land on Valve Is .326"OD) 1990-95 (3.0L)	1	E89Z-76063-B
680	56615AB	Governor, [A4LD] (Small Land on Valve Is .314"OD) (Valve Has 1-Groove)	1	
680	56615AC	Governor, [A4LD] (Small Land on Valve Is .314"OD) (Valve Has No Groove)	1	
685	56615D	Support, [C-3 / A4LD] (Governor) (*Except 4.0L) (Cast Iron) 1974-Up	1	D8ZZ-7D220-A
685	56615E	Support, [A4LD] (Governor) (4.0L) (Forged Steel) 1990-Up	1	
685	56615H	Support, [4R44E / 4R55E] (Parking Gear) 1995-Up	1	
685	56615G	Support, [5R55E] (Parking Gear) (With 8-Spoke Reluctor) 1997-Up	1	XL2Z-7M176-AA
698	56415	Oil Dam, [A4LD / 4R55E / 5R55E] (4.0L) (Output Shaft Sleeve) 1990-96	1	F0TZ-7B176-A
698	56415A	Oil Dam, [A4LD / 4R55E / 5R55E] (Output Shaft Sleeve) 1997-Up	1	F77Z-7B176-AC
		VALVE BODIES (REBUILT)		
740	FD-3308	Valve Body, [A4LD] (2-Solenoids) (Without Reverse Modulator Valve) (5-Check Balls) 1988-90	1	
740	FD-3309	Valve Body, [A4LD] (2-Solenoids) (With Reverse Modulator Valve) (4-Check Balls) 91-Up	1	
740	FD-3310	Valve Body, [A4LD] (1-Solenoid) (Scorpio / Mercury Only*) (7-Check Balls) 1985-87	1	
740	FD-3311	Valve Body, [A4LD] (1-Solenoid) (6-Check Balls) 1985-87	1	
740	FD-3320	Valve Body, [4R44E] (6-Solenoids) 1995-Up	1	
740	FD-3321	Valve Body, [4R55E] (6-Solenoids) 1995-96	1	
740	FD-3322	Valve Body, [5R55E] (6-Solenoids) 1997-Up	1	
		VALVE BODIES		
740	56947	Valve Body, [C-3] 1974-87	1	

740	56947A	Valve Body, [A4LD] (With 1-Solenoid) 1985-87	1	
740	56947B	Valve Body, [A4LD] (With 2-Solenoids) 1988-94	1	
740	56947H	Valve Body, [4R44E / 4R55E / 5R55E] (With 6-Solenoids) 1995-Up	1	3L5Z-7A100-AA
		VALVE BODY COMPONENTS		
741	56947-14K	End Plug Kit, [A4LD] (Small, Medium & Large) (14-Pieces)	1	Sonnax
741	10000-02K	Relief Valves, [A4LD / 4R44E] (In Valve Body) (10 Per Kit)	1	Sonnax
741	56490	Spring, [A4LD] (Converter Clutch Lock-Up Spring)	1	E5TZ-7L490-A
741	56995A	Spring Kit, [A4LD] (Anti-Shudder) (2 Per Kit)	1	Sonnax
741	56947-02K	Boost Valve Kit, [A4LD] (High Ratio) (With O-Rings)	1	Sonnax
741	56947-04K	Boost Valve Kit, [A4LD] (Low Ratio) (With O-Rings)	1	Sonnax
741	56947-03K	Boost Valve Kit, [A4LD] (High Ratio) (Without O-Rings) (Factory Style)	1	Sonnax
741	56947-05K	Boost Valve Kit, [A4LD] (Low Ratio) (Without O-Rings) (Factory Style)	1	Sonnax
741	37947-EZ	Baseline Rebuild Kit, [4R44E / 4R55E / 5R55E] (Boost Valve Assembly, Forward Modulation Valve, 6-End Plugs, 4-Torlon Check Balls, O-Rings & Springs)	1	Sonnax
741	37947-46K	Spring Kit, [4R44E / 4R55E / 5R44E / 5R55E] (TCC Regulator Valve) (5-Outer & 5-Inner Springs)	1	Sonnax
741	56947-12	Disc Retainer Set, [A4LD] (Valve Retainer) (Disc Shaped) (10 Per Set)	1	Sonnax
741	56947-13	Square Retainer Set, [A4LD] (Valve Retainer) (Square) (10 Per Set)	1	Sonnax
741	56947-11	Retainer Pin Set, [A4LD] (Valve Retainer Pin) (“L” Shaped) (10 Per Set)	1	Sonnax
741	37947-03K	Boost Valve Kit, [4R44E / 4R55E / 5R44E / 5R55E] (Valve & Sleeve) (With Increased Ratio)	1	Sonnax
741	37947-01K	Boost Valve Kit, [4R44E / 4R55E / 5R44E / 5R55E] (Valve & Sleeve) (With OEM Ratio)	1	Sonnax
741	56947-01	Index Spool, [A4LD] (*Slips Over Manual Valve, Allows S-Clip to be Attached)	1	Sonnax
741	37947-13K	End Plug Kit, [4R44E / 4R55E / 5R55E] (With O-Rings) (Contains: 2-Small Plugs, 1-Large Plugs, 5-Small & 3-Large O-Rings, Check Balls and “L” Retaining Pins)	1	Sonnax
741	56683	Manual Valve, [A4LD]	1	E8TZ-7C389-A
741	56947-TK	Throttle Kit, [4R44E / 4R55E / 5R55E]	1	3L5Z-7M203-JA
741	56947-06K	Pressure Regulator Kit, [A4LD] (*Fixes Worn Valve Body Bore) (Contains: Pressure Regulator Valve, 2-Springs, Boost Valve / Sleeve) **(*Must Use Tool # 56947-TL)**	1	Sonnax
	56947-TL	Reamer, [A4LD] (Pressure Regulator Valve Bore Tool)	1	
741	56947-17	Spring Kit, [4R44E / 4R55E/ 5R44E / 5R55E] (Main Pressure Regulator) (Elevated Pressure) (20-Springs Per Kit)	1	Sonnax
741	37947-05K	Pressure Regulator Kit, [4R44E / 4R55E / 5R44E / 5R55E] (Contains: 1-Sleeve, 1-Retaining Clip and 1-Spring) **(*Must Use 37947-TL5)**	1	Sonnax
	37947-TL5	Reamer Kit, [4R44E / 4R55E / 5R44E / 5R55E] (Pressure Regulator Sleeve) (*For S56741PAK)	1	Sonnax
741	K027	Boost Valve & Sleeve, [A4LD] (Reverse)	1	Superior
		HARD PARTS (Continued)		
747	56876	Plate, [4R44E] (Valve Body Seperator Plate) 1995-96 (With EPC Blow-off Hole Eliminated)	1	F5TZ-7A008-CA
747	56876A	Plate, [4R44E] (Valve Body Seperator Plate) 1997 (2.3L / 3.0L OHV Ranger / Aerostar) (With EPC Blow-off Hole Eliminated)	1	F77Z-7A008-AB
747	56876B	Plate, [4R55E / 5R55E] (Valve Body Seperator Plate) 1997 (4.0L Ranger / Aerostar) (With EPC Blow-off Hole Eliminated)	1	F77Z-7A008-CB
747	56876C	Plate, [4R55E / 5R55E] (Valve Body Seperator Plate) 1997 (OHV Explorer / Mountaineer 4.0L) (With EPC Blow-off Hole Eliminated)	1	F77Z-7A008-DB
747	56876D	Plate, [4R55E / 5R55E] (Valve Body Seperator Plate) 1997 (Explorer / Mountaineer 4.0L SOHC) (With EPC Blow-off Hole Eliminated)	1	F77Z-7A008-EB
747	56287B	Plate, [4R44E] (Valve Body Seperator Plate) 1998-01 (2.5L Ranger) (With EPC Blow-off Hole Eliminated)	1	1L5Z-7Z490-DA
747	56287C	Plate, [4R44E] (Valve Body Seperator Plate) 1998-00 (3.0L Ranger) (With EPC Blow-off Hole Eliminated) (With Bonded Gaskets)	1	1L5Z-7Z490-EA

747	56287D	Plate, [5R44E] (Valve Body Seperator Plate) 2001-02 (2.3L Ranger) (With EPC Blow-off Hole Eliminated) (With Bonded Gaskets)	1	1L5Z-7Z490-AA
747	56287E	Plate, [5R44E] (Valve Body Seperator Plate) 2001-02 (3.0L Ranger) (With EPC Blow-off Hole Eliminated) (With Bonded Gaskets)	1	1L5Z-7Z490-BA
747	56287F	Plate, [4R55E / 5R55E] (Valve Body Seperator Plate) 1998-00 (4.0L EI Ranger) (With EPC Blow-off Hole Eliminated) (With Bonded Gaskets)	1	1L5Z-7Z490-FA
747	56287G	Plate, [4R55E / 5R55E] (Valve Body Seperator Plate) 1998-00 (4.0L EI Explorer) (With EPC Blow-off Hole Eliminated) (With Bonded Gaskets)	1	1L5Z-7Z490-GA
747	56287H	Plate, [4R55E / 5R55E] (Valve Body Seperator Plate) 1998-00 (4.0L SOHC) (With EPC Blow-off Hole Eliminated) (With Bonded Gaskets)	1	1L5Z-7Z490-HA
747	56287I	Plate, [4R55E / 5R55E] (Valve Body Seperator Plate) 2001-02 (4.0L SOHC) (With EPC Blow-off Hole Eliminated) (With Bonded Gaskets)	1	1L5Z-7Z490-CA
750	56380	Bell Housing, [C-3] (2.8L) (V-6)	1	
750	56380A	Bell Housing, [C-3] (4 Cylinder) (Top Bolts 4-1/4") (3-Bolt Starter) (Cast # 74DT-7A834)	1	
750	56381	Bell Housing, [C-3] (4 Cylinder) (Top Bolts 5-1/8") (3-Bolt Starter)	1	
750	56381A	Bell Housing, [A4LD] (8mm) (Bolts 3-1/2" Across to Starter) 1988-95	1	
750	56382	Bell Housing, [A4LD] (6mm) (Bolts 3-1/2" Across to Starter) 1985-87	1	
750	56382B	Bell Housing, [A4LD] (6mm) (Bolts 3-1/2" Across to Starter) 1985-87	1	
750	56382C	Bell Housing, [A4LD] (4 Cylinder) (Hex Head Pump Bolts) (3-Bolt Starter) 1985-87 (2-Top Bell Engine Bolts are 4-1/4" Center to Center) (Cast # 85GT-7A834-AC)	1	
750	56382D	Bell Housing, [A4LD] (4 Cylinder) (Allen Head Pump Bolts) (3-Bolt Starter) (Top Bolts 4-1/4") 1988-Up	1	
750	56382E	Bell Housing, [A4LD] (4 Cylinder) (Hex Head Pump Bolts) (3-Bolt Starter) 1985-87 (2-Top Bell Engine Bolts are 5-1/8") (Bell Thickness From Front to Back is 6-1/2")	1	
750	56382F	Bell Housing, [A4LD] (4 Cylinder) (Allen Head Bolts) (3-Bolt Starter) 1988-Up (2-Top Bell Engine Bolts are 5-1/8" Center to Center) (Bell Thickness From Front to Back is 6-1/2")	1	
750	56382G	Bell Housing, [A4LD] (4 Cylinder) (Allen Head Bolts) (3-Bolt Starter) 1988-Up (2-Top Bell to Engine Bolts are 5-1/8" Center to Center) (Bell Thickness From Front to Back is 6-7/8")	1	
750	56382H	Bell Housing, [A4LD] (2.8L, 2.9L, V-6) (Hex Head Pump Bolts) (2-Starter Bolts are 4-1/8" Center to Center) 1985-87 (2-Top Bell to Engine Bolts are 3-3/8" Center to Center)	1	
750	56382A	Bell Housing, [A4LD] (2.8L, 2.9L, V-6) (Hex Head Pump Bolts) (2-Starter Bolts are 5-1/4" Center to Center) 1985-87 (2-Top Bell to Engine Bolts are 3-3/8" Center to Center)	1	
750	56382J	Bell Housing, [A4LD] (2.8L, 2.9L, V-6) (Allen Head Pump Bolts) (2-Starter Bolts are 4-1/8" Center to Center) 1988-94 (2-Top Bell to Engine Bolts are 3-3/8" Center to Center)	1	
750	56382K	Bell Housing, [A4LD] (2.8, 2.9L) (Allen Head Pump Bolts) (2-Starter Bolts 5-1/4" Center to Center) (2-Top Bell to Engine Bolts 3-3/8" Center to Center) (Cast# 85GT-7A834-AA) 1988-94	1	
750	56382N	Bell Housing, [A4LD] (4.0L, V-6) (Allen Head Pump Bolts) (2-Starter Bolts are 5-1/4" Center to Center) 1988-94 (Cast # 90GT-7A834-AA)	1	
750	56382L	Bell Housing, [A4LD] (3.0L, V-6) (Hex Head Pump Bolts) (3-Bolt Starter) 1985-87 (2-Top Engine Bolts are 4-3/4" Center to Center)	1	E79Z-7976-A
750	56382M	Bell Housing, [A4LD] (3.0L, V-6) (Allen Head Pump Bolts) (3-Bolt Starter) 1988-Up (2-Top Bell to Engine Bolts are 4-3/4" Center to Center)	1	
750	56382O	Bell Housing, [4R44E] (2.3L) (Top Bolts are 4-1/4") (6-Bolt Pump) 1995-96 (With 3-Bolt Starter) (Cast # 95GT-7A834-DC)	1	
750	56382Q	Bell Housing, [4R44E] (3.0L) (Top Bolts are 4-3/4") (6-Bolt Pump) 1995-96 (With 3-Bolt Starter) (Cast # 95GT-7A834-CB)	1	
750	56382R	Bell Housing, [4R55E] (4.0L) (Top Bolts are 3-3/8") (6-Bolt Pump) 1995-96 (With 2-Bolt Starter) (Cast # 95GT-7A834-BB)	1	
750	56382P	Bell Housing, [5R55E] (4.0L) (Top Bolts are 3-3/8") (6-Bolt Pump) 1997-99 (Cast # 97GT-7A834-AC)	1	
750	56382S	Bell Housing, [5R44E] (2.3L) (Round Bell) (6-Bolt Pump) (Square Starter) (Cast # RF1L5P) 2000-Up	1	
760	56360	Case, [C-3] 1974-87	1	
760	56361A	Case, [A4LD] (Roller Type Sprag) (*Uses a 1/4" Pipe Thread Cooler Fitting) 1985-86	1	E7TZ-7005-N

760	56361B	Case, [A4LD] (Roller Type Sprag) (16.5mm Thread Cooler Fitting, 22mm Wrench) 85-94	1	
760	56361C	Case, [A4LD] (4.0L) (Lug Type Sprag) L1989-94	1	F0TZ-7005-F
760	56361D	Case, [4R44E] (2.3L & 3.0L) (Roller Type Sprag) 1995-96	1	
760	56361E	Case, [4R55E] (4.0L) (Lug Type Sprag) 1995-Up	1	
760	56361F	Case, [5R55E] (*Uses 1-Overdrive & 1-Output Sensor) 1997	1	
760	56361G	Case, [5R55E] (*Uses 1-Output Speed Sensor) 1997-00	1	F77Z-7005-DB
760	56361H	Case, [5R55E] (No Sensors on Case) 1997-00	1	
760	56361I	Case, [5R55E] (*Uses 1-ISS In Middle of Case) & (1-Output Sensor Rear Side of Case) 2001-Up	1	1L5Z-7005-FA
760	56361J	Case, [4R44E / 5R44E] (2.3L / 3.0L) (Lug Type Sprag) 1997-Up	1	
		CASE COMPONENTS		
	56000-CS6	Crank Shaft Spacer, [A4LD] (*For 2.8L / 2.9L / 4.0L) (6-Bolt)	1	Sonnax
	56870	Crank Shaft Spacer, [A4LD] (*For 2.8L / 2.9L / 4.0L) (6-Bolt)	1	
	56000-CS8	Crank Shaft Spacer, [A4LD / 4R44E / 4R55E / 5R44E / 5R55E] (8-Bolt)	1	Sonnax
	56870A	Crank Shaft Spacer, [A4LD / 4R44E / 4R55E / 5R44E / 5R55E] (8-Bolt)	1	
	56361-01K	Sleeve, [A4LD / 4R44E / 4R55E / 5R55E] (Shift Linkage Shaft) (With 1-Sleeve, 1- 3mm Pin, & 1- .125" Pin) **(*Use With 56361-TL)**	1	Sonnax
	56361-TL	Tool Kit, (*For 56361-01K)	1	Sonnax
	56532-01K	Sleeve, [C-3 / A4LD / 4R44E / 4R55E / 5R55E] (Rear Servo Bore) (Presses In Case at Rear Servo Bore) **(*The Rear Servo Piston Must Be Machined For Sleeve)**	1	Sonnax
	TK-56-RTD	Tool Kit, [A4LD / 4R / 5R / AOD / AODE / 4R70W / 4R100] (Shift Linkage Pin Remover & Installer)	1	Teckpak
		HARD PARTS (Continued)		
765	56850A	Pan, [C-3] 1974-87	1	
765	56850C	Pan, [A4LD] (2WD) 1985-88	1	
765	56850D	Pan, [A4LD] (2WD) 1989-Up	1	
765	56850	Pan, [A4LD / 4R44E / 4R55E] (4x4) 1985-96	1	
765	56850E	Pan, [4R44E / 4R55E] (2WD) 1995-Up	1	
765	56850B	Pan, [4R44E / 4R55E] (4x4) 1997-Up	1	
770	56370	Extension Housing, [C-3] (2WD) 1974-87	1	
770	56370A	Extension Housing, [A4LD / 4R44E / 4R55E] (2WD) (Speed-O Hole Is 5-3/4" From Rear Seal, on Drivers Side) 1985-Up (Cast # 85GT-7A041-CA)	1	E5TZ-7A039-C
770	56370B	Extension Housing, [4R44E / 4R55E] (2WD) (Speed-O Hole Is 5-3/4" From Rear Seal, on Drivers Side) 1995-Up (Cast # 95GT-7A040-BAR)	1	
770	56370C	Extension Housing, [A4LD / 4R44E / 4R55E] (2WD) (No Speed-O Hole) 1990-Up	1	
770	56371	Extension Housing, [A4LD / 4R44E / 4R55E] (4x4) (Cast # 85GT) 1985-Up	1	E5TZ-7A039-B
770	56371A	Extension Housing, [A4LD / 4R44E / 4R55E] (4x4) (Cast # 90GT) 1990-Up	1	F0TZ-7A039-B
843	56994	Bracket, [A4LD] (*For Modulator)	1	
843	56894	Bracket, [4R44E / 4R55E / 5R55E] (Holds Solenoid to Valve Body)	1	XL4Z-7L491-AA
853	56070	Rubber Cushion, [C-3 / A4LD] (.330" Thick) (SIts In Forward Piston) 1974-89	1	D8ZZ-7B070-A
853	56070A	Rubber Cushion, [A4LD / 4R44E / 4R55E] (.299" Thick) (SIts In Forward Piston) 1990-95	1	F0TZ-7B077-A
	K56928	Snap Ring Kit, [C-3 / A4LD / 4R44E / 4R55E / 5R55E] 1974-Up	1	41680
861	56601	Snap Ring, [A4LD / 4R44E / 4R55E / 5R55E] (Holds Overdrive Clutch in Drum) (.054") (*Also Direct Drum)	1-2	E860126S
861	56601A	Snap Ring, [A4LD / 4R44E / 4R55E / 5R55E] (Holds Overdrive Clutch in Drum) (.068") (*Also Direct Drum)	1-2	E860127S
861	56601B	Snap Ring, [A4LD / 4R44E / 4R55E / 5R55E] (Holds Overdrive Clutch in Drum) (.082") (*Also Direct Drum)	1-2	E860128S

861	56601C	Snap Ring, [A4LD / 4R44E / 4R55E / 5R55E] (Holds Overdrive Clutch in Drum) (.096") (*Also Direct Drum)	1-2	E860129S
862	56602	Snap Ring, [A4LD / 4R44E / 4R55E / 5R55E] (Holds Overdrive Clutch Spring Retainer in Drum)	1	E860125S
868	56603	Snap Ring, [A4LD / 4R44E / 4R55E / 5R55E] (Holds Overdrive Ring Gear to Hub)	1	W702037-S
876	56604	Snap Ring, [C-3 / A4LD / 4R44E / 4R55E / 5R55E] (Holds Forward Clutch in Drum) (.065")	1	
876	56604A	Snap Ring, [C-3 / A4LD / 4R44E / 4R55E / 5R55E] (Holds Forward Clutch in Drum) (.080")	1	
877	56605	Snap Ring, [C-3 / A4LD / 4R44E /4R55E / 5R55E] (Holds Forward Clutch Spring Retainer in Drum)	1	
879	56606	Snap Ring, [C-3 / A4LD / 4R44E / 4R55E / 5R55E] (Holds Direct Clutch Spring Retainer in Drum)	1	
881	56607	Snap Ring, [C-3 / A4LD / 4R44E / 4R55E / 5R55E] (Holds Hub to Front Planet)	1	D4ZZ-7A480-A
882	56608	Snap Ring, [C-3 / A4LD / 4R44E / 4R55E / 5R55E] (Holds Front Ring Gear to Hub)	1	E860122-S
883	56609	Snap Ring, [A4LD / 4R44E / 4R55E / 5R55E] (Holds Center Support to Case)	1	W702465-S300
884	56610	Snap Ring, [C-3 / A4LD / 4R44E / 4R55E / 5R55E] (Holds Sun Gear in Shell)	2	E860121-S
889	56610A	Snap Ring, [C-3 / A4LD / 4R44E / 4R55E / 5R55E] (Holds Rear Hub to Rear Ring Gear)	1	E806122-S
890	56611	Snap Ring, [C-3 / A4LD / 4R44E] (Holds Rear Planet in Reverse Drum) (.060") (*Except 4.0L)	1	W702037-S300
893	56612	Snap Ring, [C-3 / A4LD / 4R44E] (Holds Rear Sprag to Reverse Band Drum) (*Except 4.0L)	1	
894	56613	Snap Ring, [C-3 / A4LD] (Holds Rear Hub to Output Shaft) (.046")	1	
894	56613A	Snap Ring, [A4LD / 4R44E / 4R55E / 5R55E] (Holds Rear Hub to Output Shaft) (.077")	1	E860527-S
896	56614	Snap Ring, [C-3 / A4LD / 4R44E / 4R55E / 5R55E] (Holds Intermediate & Overdrive Servo Cover in Case)	1-2	E860343-S
902	56528D	Piston, [C-3 / A4LD / 4R44E / 4R55E / 5R55E] (Intermediate & Overdrive Servo) (Molded) (1.655"OD) (Cover Cast # FB) (Piston Cast # 90GT-7E221-F1A)	1-2	F0TZ-7D021-B
902	56582G	Piston, [C-3 / A4LD / 4R44E / 4R55E / 5R55E] (Intermediate & Overdrive Servo) (Molded) (1.72"OD) (Cover Cast # EB) (Piston Cast # 90GT-7E221-B1A)	1-2	F0ZZ-7D021-A
902	56582E	Piston, [C-3 / A4LD / 4R44E / 4R55E / 5R55E] (Intermediate & Overdrive Servo) (Molded) (1.75"OD) (Cover Cast # DB) (Piston Cast # 90GT-7E221-D1A)	1-2	F0TZ-7D021-A
902	56582C	Piston, [C-3 / A4LD / 4R44E / 4R55E / 5R55E] (Intermediate & Overdrive Servo) (Molded) (1.845"OD) (Cover Cast # CA/CB)	1-2	E3ZZ-7D021-A
902	56528A	Piston, [C-3 / A4LD / 4R44E / 4R55E / 5R55E] (Intermediate & Overdrive Servo) (Molded) (1.945"OD) (Cover Cast # BA/BB) (Piston Cast # 83DT-7E221-B1A)	1-2	F2ZZ-7D021-A
902	56528	Piston, [C-3 / A4LD / 4R44E / 4R55E / 5R55E] (Intermediate & Overdrive Servo) (Molded) (2.10"OD) (Cover Cast # AA/AB) (Piston Cast # 78DT-83DT-7E221-A1A/A2A)	1-2	D4ZZ-7D021-A
902	56528M	Piston, [A4LD / 4R44E / 4R55E / 5R55E] (Intermediate & Overdrive Servo) (Molded) (2.314"OD) (Cover Cast # ZC) (Piston Cast # ZA)	1-2	F77Z-7D021-ZA
902	K56840	Kit, Servo & Cover Kit, [A4LD / 4R44E / 4R55E / 5R55E] (*Updates Smaller to 2.10" Servo Kit)	1-2	
904	56838D	Servo Cover, [C-3 / A4LD / 4R44E / 4R55E / 5R55E] (Intermediate & Overdrive) (1.655"ID) (Cover Cast # FB)	1-2	
904	56838G	Servo Cover, [C-3 / A4LD / 4R44E / 4R55E / 5R55E] (Intermediate & Overdrive) (1.720"ID) (Cover Cast # EB)	1-2	
904	56838E	Servo Cover, [C-3 / A4LD / 4R44E / 4R55E / 5R55E] (Intermediate & Overdrive) (1.751"ID) (Cover Cast # DB)	1-2	
904	56838C	Servo Cover, [C-3 / A4LD / 4R44E / 4R55E / 5R55E] (Intermediate & Overdrive) (1.845"ID) (Cover Cast # CA or CB)	1-2	
904	56838A	Servo Cover, [C-3 / A4LD / 4R44E / 4R55E / 5R55E] (Intermediate & Overdrive) (1.945"ID) (Cover Cast # BA or BB)	1-2	
904	56838	Servo Cover, [C-3 / A4LD / 4R44E / 4R55E / 5R55E] (Intermediate & Overdrive) (2.10"ID) (Cover Cast # AA or AB)	1-2	E2ZZ-7D052-A
904	56838M	Servo Cover, [C-3 / A4LD / 4R44E / 4R55E / 5R55E] (Intermediate & Overdrive) (2.314"ID) (Cover Cast # ZC)	1-2	F77Z-7D027-ZC

910	K56532	Servo Assembly, [C-3 / A4LD / 4R44E / 4R55E / 5R55E] (Reverse) (1-Groove)	1	D7ZZ-7D189-C
910	K56533	Servo Assembly, [C-3 / A4LD / 4R44E / 4R55E / 5R55E] (Reverse) (2-Grooves)	1	D7ZZ-7D189-A
910	K56534	Servo Assembly, [C-3 / A4LD / 4R44E / 4R55E / 5R55E] (Reverse) (No Groove)	1	D7ZZ-7D189-B
912	56532	Piston, [C-3 / A4LD / 4R44E / 4R55E] (Reverse Servo) (1-Groove)	1	
912	56533	Piston, [C-3 / A4LD / 4R44E / 4R55E] (Reverse Servo) (2-Grooves)	1	
912	56534	Piston, [C-3 / A4LD / 4R44E / 4R55E] (Reverse Servo) (No Groove)	1	
912	R56532	Piston, [C-3 / A4LD / 4R44E /4R55E / 5R55E] (Reverse Servo) **(*Machined For Sleeve # 56532-01K)**	1	Sonnax
915	56320SA	Band Strut Set, [A4LD / 4R44E / 4R55E / 5R55E] (Overdrive Band) (Band Lever # A)	1	
915	56320SB	Band Strut Set, [A4LD / 4R44E / 4R55E / 5R55E] (Overdrive Band) (Band Lever # C)	1	
915	56320SC	Band Strut Set, [A4LD / 4R44E / 4R55E / 5R55E] (Overdrive Band) (Band Lever # D)	1	
915	56320SD	Band Strut Set, [A4LD / 4R44E / 4R55E / 5R55E] (Overdrive Band) (Band Lever # E)	1	
915	56320SE	Band Strut Set, [A4LD / 4R44E / 4R55E / 5R55E] (Overdrive Band) (Band Lever # G)	1	
916	56320SF	Band Strut Set, [C-3 / A4LD / 4R44E / 4R55E / 5R55E] (Intermediate Band) (Band Lever Cast # A)	1	
916	56320SG	Band Strut Set, [C-3 / A4LD / 4R44E /4R55E / 5R55E] (Intermediate Band) (Band Lever Cast # C)	1	
916	56320SH	Band Strut Set, [C-3 / A4LD / 4R44E / 4R55E / 5R55E] (Intermediate Band) (Band Lever Cast # D)	1	
916	56320SJ	Band Strut Set, [C-3 / A4LD / 4R44E / 4R55E / 5R55E] (Intermediate Band) (Band Lever Cast # E)	1	
916	56320SK	Band Strut Set, [C-3 / A4LD / 4R44E / 4R55E / 5R55E] (Intermediate Band) (Band Lever Cast # G)	1	
916	56320S	Strut, [A4LD / 4R55E / 5R55E] (Intermediate Band) (4.0L) (Apply)	1	
917	56521	Rear Band Anchor Pin Set, [A4LD / 4R44E / 4R55E / 5R55E] (10-Pins & 1-Reamer)	1	Sonnax
922	26610	Nut, [C-3 / A4LD / 4R44E / 4R55E / 5R55E] (Band Adjustment Nut) (Coarse Threads)	1-2	380850-S
961	56884	Piston, [A4LD / 4R44E / 4R55E] (Overdrive & Direct Clutch) (4-1/2”OD) (Lathe Cut Seal Type)	1-2	E8TZ-7A262-A
961	56884A	Piston, [A4LD / 4R44E / 4R55E] (Overdrive & Direct Clutch) (4-1/4”OD) (Lip Seal Type)	1-2	
961	56885	Piston, [A4LD / 4R44E / 4R55E / 5R55E] (Direct Clutch) (4-1/2”OD) (Lip Seal Type) (Cast # 90DT)	1	
961	56885A	Piston, [5R55E] (Overdrive Clutch) (4-7/8”OD) (Cast # 97GT) 1997-Up	1	
964	56886	Piston, [C-3 / A4LD / 4R44E / 4R55E / 5R55E] (Forward Clutch)	1	
971	56882	Spring, [C-3 / A4LD / 4R44E / 4R55E / 5R55E] (Overdrive & Direct Clutch Return)	20	F1TZ-7A480-B
971	K56882	Spring Kit, [C-3 / A4LD / 4R44E / 4R55E / 5R55E] (Overdrive & Direct Clutch Return) (20-Springs)	1	
981	56921	Retainer, [A4LD / 4R44E / 4R55E] (Overdrive & Direct Drum Spring)	1-2	ESTZ-7A527-A
	K56884	Kit, Spring Retainer, (High / Reverse & Overrun) (Retainer, Springs & Snap Ring)	1	
981	56921A	Retainer, [5R55E] (Overdrive & Direct Drum Spring) 1997-Up	1-2	
991	K56676	Linkage, [A4LD] (Internal With Park Rod)	1	E6TZ-7A247-A
991	K56676A	Linkage, [4R44E / 4R55E / 5R55E] (Internal With Park Rod)	1	
991	56675	Shaft, [4R44E / 4R55E / 5R55E] (Manual Lever) 1995-Up	1	
992	56675A	Lever With Shaft, [A4LD] (Shift) (External) (Bronco II, Explorer, & Ranger) 1985-88	1	E5TZ-7A256-A
992	56675B	Lever With Shaft, [A4LD] (Shift) (External) (Aerostar) 1985-91	1	E5TZ-7A256-B
992	56675C	Lever With Shaft, [A4LD] (Shift) (External) (Mustang) 1987-93	1	F3ZZ-7A256-A
992	56675D	Lever With Shaft, [A4LD] (Shift) (External) (Thunderbird) 1987-93	1	E7SZ-7A256-A
992	56675E	Lever With Shaft, [A4LD] (Shift) (External) (*Explorer With 4.0L) 1989-94	1	E9TZ-7A256-B
992	56675F	Lever With Shaft, [A4LD] (Shift) (External) (Aerostar) 1992-94	1	F3TZ-7A256-B
992	56675G	Lever Without Shaft, [4R44E / 4R55E / 5R55E] (Shift) (External) 1995-Up	1	

995	K56678	Park Pawl Assembly, [A4LD / 4R44E / 4R55E / 5R55E] (Park Pawl Is .370” Thick)	1	
995	K56678A	Park Pawl Assembly, [A4LD / 4R44E / 4R55E / 5R55E] (Park Pawl Is .305” Thick)	1	
996	K56289	Fitting, [A4LD / 4R44E / 4R55E / 5R44E / 5R55E] (Cooler) (16.5mm Thread, Screw In Thread Screws Into Case) (*For a 5/16” Push In Cooler Line) **(*Uses a 22mm Wrench)**	2	

NOW YOU HAVE A CHOICE... Make IT A SUPERIOR ONE!

Choice is what it's all about, and until now you didn't have one!

The New 5R55W/N/S Shift Correction Package™ developed in conjunction with TransLab Engineered & Superior Transmission Parts, Inc. is finally the Simple Solution to this problematic unit!

Due to the factory design of no cooler flow cold, it is extremely temperamental to fill and get a correct level, as well as running extremely hot compared to others without flow control systems. We finally broke thru with our Sure-Cool™ Full Time Cooler Flow Valve along with enhanced Lube system that nearly Triples the Flow thru the cooler and parts, especially the O.D. Planetary. These Flow Control Upgrades virtually eliminate front Planetary Burn-up due to lack of Poor /No lube. This new system also furnishes a built in cooler bypass system that if the unit is extremely cold (fluid starts to gel) or in the event the cooler is blocked/restricted, flow to the parts still occurs – protecting your investment.



Part# K5R55W/N/S

This New 5R55W/N/S Shift Correction Package™ includes:

- Our Ever Popular K060 "No Stick" Line Pressure Relief Valve Kit
- New Lock-up upgrade system that allows an On-Off Type Apply that is proof the lock up apply does not have to be firm and harsh to be fixed
- 3-4 Drum Piston return springs replace the often found fatigued originals, due to band and drum burn up
- Addresses several TCC error & shift solenoid error codes as well as P0740
- Keeps Solenoid Blocks, Parts and Components Cooler and well lubricated

"Make The Shift To..."™ Superior Transmission Parts, Inc.

SUPERIOR
TRANSMISSION PARTS, INC.™
THE SIMPLE SOLUTION

VISIT OUR NEW INTERACTIVE WEBSITE:
www.superiortransmission.com
Connect with Superior Transmission Parts on Facebook & Twitter:
Superior Transmission Parts, Inc. superiortrans1
Phone: 1-800-451-3115 x207 sales International: 850-574-2369 x207 sales

5R55S/5R55W/5R55N

RWD 5 Speed

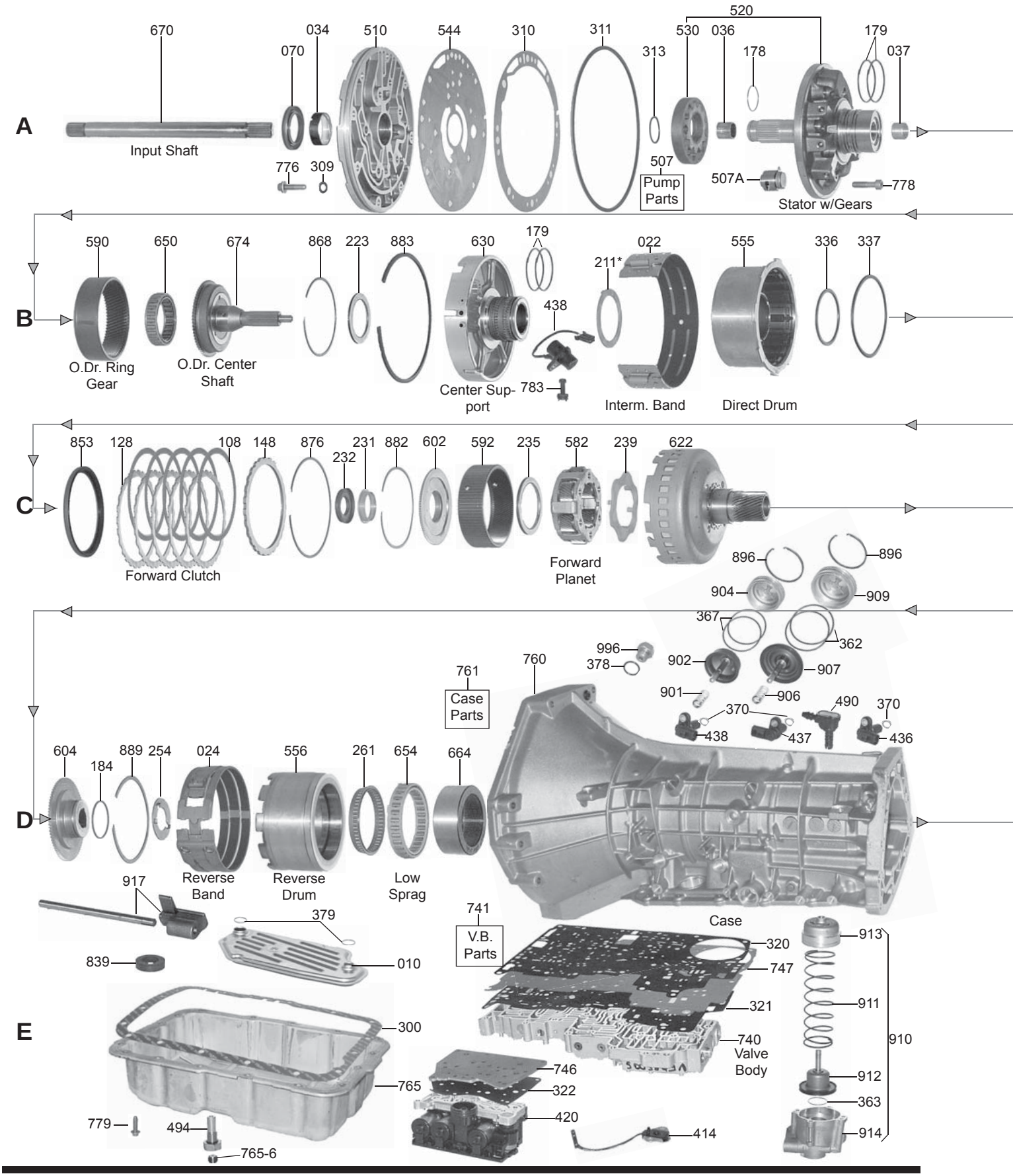

RWD 5 Speed

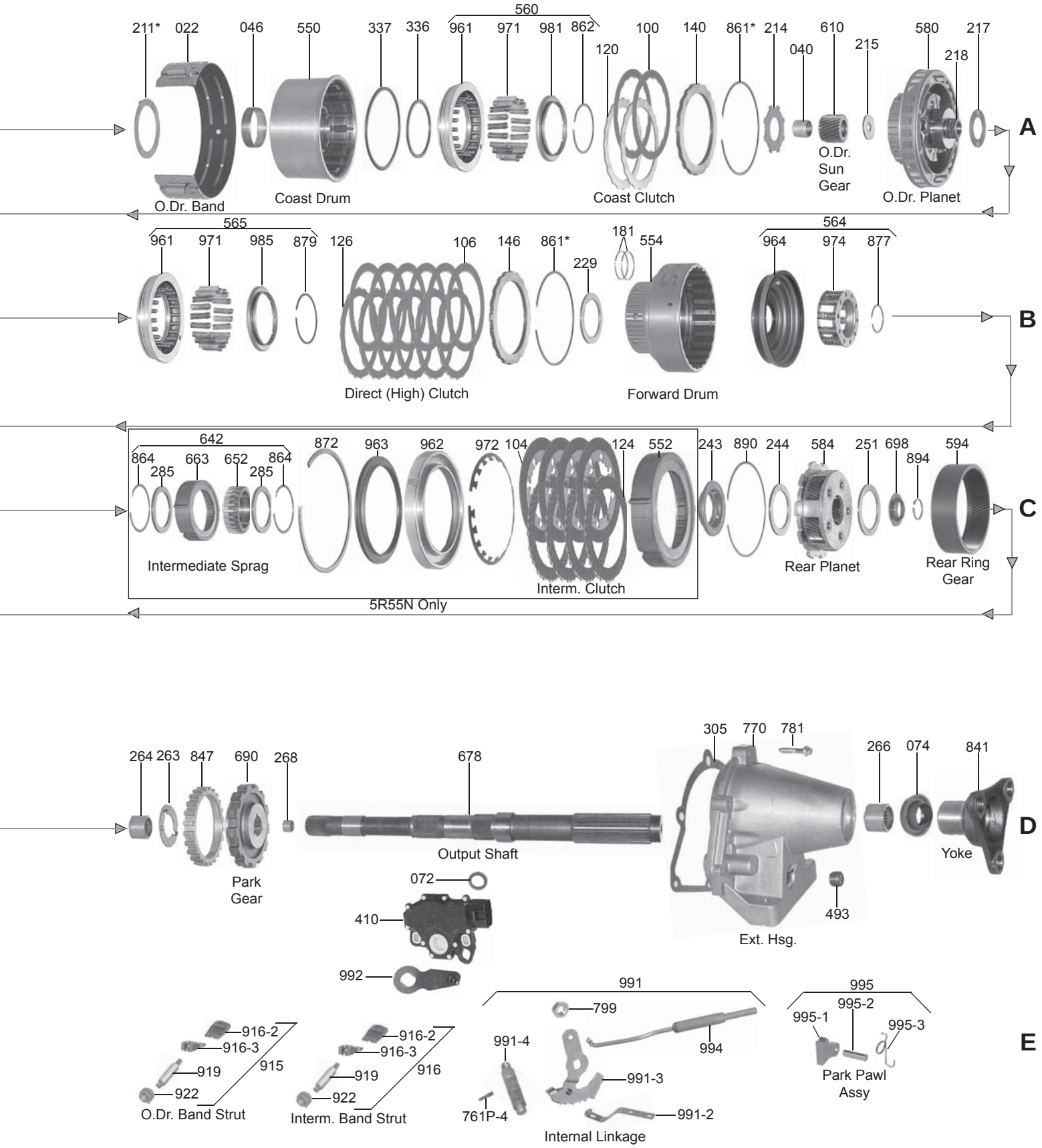
211* 022 046 550 337 336 560 961 971 981 862 120 100 140 861* 214 040 610 215 580 217 218
O.Dr. Band
Coast Drum
Coast Clutch
O.Dr. Sun Gear
O.Dr. Planet
A
565 961 971 985 879 126 106 146 861* 229 181 554 564 964 974 877
Direct (High) Clutch
Forward Drum
B
642 864 285 663 652 285 864 872 963 962 972 104 124 552 243 890 244 584 251 698 894 594
Intermediate Sprag
Interm. Clutch
Rear Planet
Rear Ring Gear
5R55N Only
C
264 263 847 690 268 678 305 770 781 266 074 841
Park Gear
Output Shaft
Ext. Hsg.
Yoke
D
072 410 992 493
916-2 916-3 919 922 915
O.Dr. Band Strut
916-2 916-3 919 922 916
Interm. Band Strut
991 799 991-4 994 991-3 761P-4 991-2
Internal Linkage
995 995-2 995-1 995-3
Park Pawl Assy
E

5R55S/5R55W/5R55N

ILL#	PART#	DESCRIPTION	QTY	REF #
		OVERHAUL KITS		
	K56900J	Overhaul Kit, [5R55N] (Without Bonded Pistons) 1999-Up	1	
	K56900JP	Overhaul Kit, [5R55N] (With Pistons) 1999-Up	1	
	K56900K	Overhaul Kit, [5R55S / 5R55W] (Without Bonded Pistons) 2002-Up	1	
	K56900KP	Overhaul Kit, [5R55S / 5R55W] (With Bonded Pistons) 2002-Up	1	
		MASTER L/STEEL KIT		
	DK5600J-S	Master L/Steels Kit, [5R55N] (Without Bonded Pistons) 1999-Up	1	
	DK5600JP-S	Master L/Steels Kit, [5R55N] (With Pistons) 1999-Up	1	
	DK5600K-S	Master L/Steels Kit, [5R55S / 5R55W] (Without Bonded Pistons) 2002-Up	1	
	DK5600KP-S	Master L/Steels Kit, [5R55S / 5R55W] (With Bonded Pistons) 2002-Up	1	
		MASTER W/STEEL KIT		
	DK5600J	Master W/Steels Kit, [5R55N] (Without Bonded Pistons) 1999-Up	1	
	DK5600JP	Master W/Steels Kit, [5R55N] (With Piston) 1999-Up	1	
	DK5600K	Master W/Steels Kit, [5R55S / 5R55W] (Without Bonded Pistons) 2002-Up	1	
	DK5600KP	Master W/Steels Kit, [5R55S / 5R55W] (With Bonded Pistons) 2002-Up	1	
		FILTER		
010	56710J	Filter, [5R55N] (3/8" Tall Pick-up Tube) 1999-Up	1	XW4Z-7A098BB
010	56710K	Filter, [5R55S / 5R55W] (2-1/4" Tall Pick-Up Tube) 2002-Up (*SUV Applications)	1	1L2Z-7A098AC
010	56710L	Filter, [5R55S / 5R55W] (1-1/16" Tall Pick-Up Tube) 2003-Up (*Car Applications)	1	3W4Z-7A098-AA
	56292	Screen/Gasket, [5R55N] (Solenoid Block) 1999-Up	1	
	56292K	Screen/Gasket, [5R55S / 5R55W] (Solenoid Block) 2002-Up	1	
		BANDS		
022	56320A	Band, [5R55N] (Intermediate & Overdrive) (Flex) 1985-Up	2	
022	56320B	Band, [5R55S / 5R55W] (Overdrive / Intermediate) (Higher Energy) 2002-Up	2	1L2Z-7D034AA
024	56520J	Band, [5R55N / 5R55S / 5R55W] (Rear Double Wrap) (1.840" Wide Strapping) 99-Up	1	XW4Z-7D095AA
		BUSHINGS		
	K56902J	Bushing Kit, [5R55N / 5R55S / 5R55W] 1999-Up	1	
034	56001	Bushing, [5R55N / 5R55S / 5R55W] (Pump Cover) 1999-Up	1	
034	56001XX	Bushing, [5R55N / 5R55S / 5R55W] (Bell Housing) 1999-Up **(*Finish In Place-Requires Machining)**	1	Sonnax
040	56000B	Bushing, [5R55N / 5R55S / 5R55W] (Overdrive Sun Gear) 1999-Up	1	
036	56000C	Bushing, [5R55N / 5R55S / 5R55W] (Stator) (Front) 1999-Up	1	
037	56000A	Bushing, [5R55N / 5R55S / 5R55W] (Stator) (Rear) 1999-Up	1	
046	56002	Bushing, [5R55N / 5R55S / 5R55W] (Coast Clutch Drum) 1999-Up	1	
	76014	Bushing, [5R55S / 5R55W] (Extension Housing) 2002-Up	1	
		METAL CLAD SEALS		
070	56550B	Seal, [5R55N / 5R55S / 5R55W] (Front) (No Flange) (Rubber Coated) 1999-Up	1	F77Z-7A248AA
072	6507A	Seal, [5R55N] (Linkage) 1999-Up	1	D5AZ-7B498A
074	56557J	Seal, [5R55N] (Rear) (2WD) 2000-Up	1	XW4Z-7052AA
074	76509	Seal, [5R55S / 5R55W] (Rear) (With Long Boot) (2WD) 2002-Up	1	F6UZ-7052A
074	56557W	Seal, [5R55S / 5R55W] (Extension Housing) (4X4) 2002-Up	1	1L2Z-7052BA
		FRICTION CLUTCH		

100	56304D	Friction, [5R55N / 5R55S / 5R55W] (Overdrive Clutch) 1999-Up	2	F7ZZ-7B164CA
104	56102M	Friction, [5R55N] (Intermediate Clutch) (1-Sided Friction External Spline) 1999-Up	4	XW4Z-7B442CA
124	56102J	Friction, [5R55N] (Intermediate Clutch) (1-Sided Friction Internal Spline) 1999-Up	4	XW4Z-7B164CA
106	56304J	Friction, [5R55N / 5R55S / 5R55W] (Direct Clutch / Hi-Reverse) (1-Sided Friction Internal Spline) 1999-Up	5	XW4Z-7B164BA
106	56304K	Friction, [5R55S] (Intermediate Clutch) (.080") (Double Sided Friction) 2008-Up (*Will Retro to 1999 if you Use 5-56304K and 5-56305)	5	
126	56304M	Friction, [5R55N / 5R55S / 5R55W] (Direct Clutch / Hi-Reverse) (1-Sided Friction External Spline) 1999-Up	5	XW4Z-7B442BA
108	56404J	Friction, [5R55N / 5R55S / 5R55W] (Forward Clutch) (.069") (5.230"OD) (89 Teeth) 1999-Up	5	XW4Z-7B164AA
	K56100J	Friction Module, [5R55N] 1999-Up	1	
	K56100K	Friction Module, [5R55S / 5R55W] 2002-Up	1	
		STEEL CLUTCH		
120	56305B	Steel, [5R55N / 5R55S / 5R55W] (Overdrive Clutch) (.065") 1999-Up	2	F0TZ-7B442B
128	56405J	Steel, [5R55N / 5R55S / 5R55W] (Forward Clutch) (.065") (4.645"ID) (27 Teeth) 99-Up	5	XW4Z-7B442AA
	K56110J	Steel Module, [5R55N] 1999-Up	1	
	K56110K	Steel Module, [5R55S / 5R55W] 2002-Up	1	
		CLUTCH PRESSURE PLATES		
140	56307B	Pressure Plate, [5R55N / 5R55S / 5R55W] (Coast Clutch) (.200") 1999-Up	1-2	F0TZ-7B066-B
146	56307B	Pressure Plate, [5R55N / 5R55S / 5R55W] (Direct Clutch) (.200") 1999-Up	1	
148	56408J	Pressure Plate, [5R55N / 5R55S / 5R55W] (Forward Clutch) (.155") (27 Teeth) (4.640"ID) 1999-Up	1	XW4Z-7B066-AA
		SHIFT KITS		
	K56908C	Shift Kit, [5R55N / 5R55W] 1999-Up (*Includes [5R55W/ 5R55S / 5R55N] Pump Alignment Tool*)	1	Transgo
		OIL SEALING RINGS		
	K56903	Ring Kit, [5R55N / 5R55S / 5R55W] (8-Rings) (2-Peek, 2-Plastic, 3-Teflon, 1-Quantum) 1999-Up	1	
178	56230A	Ring, [5R55N / 5R55S / 5R55W] (Pump Support) (Lock-up) (Quantum Material) 99-Up	1	
179	56229T	Ring, [5R55N / 5R55S / 5R55W] (Overdrive / Coast Drum) (Teflon) 1999-Up	2	
179	56228D	Ring, [5R55N / 5R55S / 5R55W] (Direct Drum Center Support) (Plastic) 1999-Up	2	
181	56227A	Ring, [5R55N / 5R55S / 5R55W] (Forward Clutch) (1.576"OD) (Peek)	2	
184	56310	Ring, [5R55N / 5R55S / 5R55W] (Outputshaft to Case) (Teflon) 1999-Up	1	
		WASHERS & BEARINGS		
211	56235B	Bearing W/Races, [5R55N / 5R55S / 5R55W] (Center Support to Direct Drum) (.115" Thick) (3.515"OD) 1999-Up	2	
211	56236A	Washer, [5R55N / 5R55S / 5R55W] (Pump to Coast Clutch Drum) (.055") (Plastic) 1999-Up	1	F7TZ-7D014VA
211	56236B	Washer, [5R55N / 5R55S / 5R55W] (Pump to Coast Clutch Drum) (.063") (Plastic) 1999-Up	1	F7TZ-7D014TA
211	56236C	Washer, [5R55N / 5R55S / 5R55W] (Pump to Coast Clutch Drum) (.069") (Plastic) 1999-Up	1	XW4Z-7D014XA
211	56236D	Washer, [5R55N / 5R55S / 5R55W] (Pump to Coast Clutch Drum) (.071") (Plastic) 1999-Up	1	F7TZ-7D014MA
211	56236E	Washer, [5R55N / 5R55S / 5R55W] (Pump to Coast Clutch Drum) (.075") (Plastic) 1999-Up	1	F7TZ-7D014NA
211	56236F	Washer, [5R55N / 5R55S / 5R55W] (Pump to Coast Clutch Drum) (.079") (Plastic) 1999-Up	1	F7TZ-7D014PA
211	56236G	Washer, [5R55N / 5R55S / 5R55W] (Pump to Coast Clutch Drum) (.083") (Plastic) 1999-Up	1	F7TZ-7D014RA

211	56236H	Washer, [5R55N / 5R55S / 5R55W] (Pump to Coast Clutch Drum) (.087") (Plastic) 1999-Up	1	F7TZ-7D014SA
211	56236I	Washer, [5R55N / 5R55S / 5R55W] (Pump to Coast Clutch Drum) (.089") (Plastic) 1999-Up	1	
211	56236J	Washer, [5R55N / 5R55S / 5R55W] (Pump to Coast Clutch Drum) (.097") (Plastic) 1999-Up	1	
214	56233A	Washer, [5R55N] *"Star Washer"* (Overdrive Sun Gear to Overdrive Drum) (24 Internal Teeth) 1999-02	1	YW4Z-7660AA
214	56223B	Washer, [5R55S / 5R55W] *"Star Washer"* (Overdrive Sun Gear to Overdrive Drum) (38 Internal Teeth) 2003-Up	1	2L2Z-7660-AA
215	56229C	Bearing W/Races, [5R55S / 5R55W] (Overdrive Sun to Overdrive Planet) 2002-Up	1	
217	56220	Bearing, [5R55N / 5R55S / 5R55W] (Overdrive Planet to Overdrive Center Shaft) 1999-Up	1	E5TZ-7L495A
223	56241	Bearing W/Races, [5R55N/ 5R55S / 5R55W] (Overdrive Center Shaft to Center Support) 1999-Up (*Also Direct Drum to Forward Drum, *Shell to Rear Planet, & *Rear Planet to Hub)	1-4	F77Z-7M153-EB
229	56241	Bearing W/Races, [5R55N / 5R55S / 5R55W] (Forward Drum to Direct Drum) 99-Up	1	
232	56234A	Bearing W/Races, [5R55N / 5R55S / 5R55W] (Forward Drum to Hub) (1.950"OD) 1999-Up	1	1L2Z-7D234-AA
231	56211D	Washer, [5R55N / 5R55S / 5R55W] (Bearing to Forward Hub) (Solid Bronze) 1999-Up	1	FOTZ-7D090A
235	56214B	Bearing W/Races, [5R55N / 5R55S / 5R55W] (Front Planet to Hub) 1999-Up	1	XW4Z-7F374AA
239	56229AA	Washer, [5R55N / 5R55S / 5R55W] (Front Planet to Shell) (2.390"ID) (.100" Thick) (Plastic) (6-Finger) 1999-Up	1	
243	56241C	Collar, [5R55N] (Intermediate) (2.990"OD) (.518" Thick) (4-Holes) (Short) 1999-Up	1	XW4Z-7C167-AA
243	56214S	Spacer, [5R55S / 5R55W] (Shell to Rear Planet) (Tall) 2002-Up	1	1L2Z-7C167-AA
244	56241	Bearing W/Races, [5R55N / 5R55S / 5R55W] (Spacer to Rear Planet) 1999-Up	1	
251	56241	Bearing W/Races, [5R55N / 5R55S / 5R55W] (Rear Planet to Hub) 1999-Up	1	
254	56239A	Bearing W/Races, [5R55N / 5R55S / 5R55W] (Rear Hub to Race) (.141" Thick) (1.960"OD) 1999-Up	1	F3RZ-7H027-A
261	56245B	Caged Needle Bearing, [5R55N / 5R55S / 5R55W] (Rear Drum to Low Sprag) (52-Needles) 1999-Up	1	
263	56216	Washer, [5R55N / 5R55S / 5R55W] (Parking Gear to Case) 1999-Up	1	D4ZZ-7B368-A
264	56491	Caged Needle Bearing, [5R55N / 5R55W] (Case to Output Shaft) 1999-Up	1	F77Z-7R205AA
266	56014B	Caged Needle Bearing, [5R55N] (Extension Housing) 1999-Up	1	
268	56006N	Caged Needle Bearing, [5R55N / 5R55S / 5R55W] (Output Shaft Pilot) 1999-Up	1	
		GASKETS & RUBBER COMPONENTS		
300	56500J	Gasket, [5R55N / 5R55S / 5R55W] (Bottom Pan) (Plastic With Silicon Bead) (OE Style) 1999--Up	1	XW4Z-7A191CA
305	56272J	Gasket, [5R55N / 5R55S / 5R55W] (2WD) (Extension Housing to Case) 1999-Up (*Also [5R55S / 5R55W] (4X4) (Case to Rear Seal Housing) (on 4x4 Units is the Inner Gasket)	1	XW4Z-7086-AA
	56272K	Gasket, [5R55S / 5R55W] (Case to Transfer Case) (Outer Gasket)	1	
309	13268A	Gasket, [5R55N / 5R55S / 5R55W] (Pump Bolt Washer)	8	
309	56777A	O-Ring, [5R55N / 5R55S / 5R55W] (Pump Bolt Washer)	8	
310	56276J	Gasket, [5R55N / 5R55S / 5R55W] (Pump) 1999-Up	1	XW4Z-7A136AB
311	56274J	O-Ring, [5R55N / 5R55S / 5R55W] (Pump Cover) 1999-Up	1	XW4Z-7A248AA
313	56128	O-Ring, [5R55N] (Inner Pump Gear) 1999-Up	1	F77Z-7L323AA
320	56287J	Gasket, [5R55N] (Valve Body Seperator Plate to Case) (Upper) 1999-Up	1	
320	56287K	Gasket, [5R55S / 5R55W] (Valve Body Seperator Plate to Case) (Upper) 2002-Up	1	
	56290J	Bonded Plate/Gasket, [5R55N] (Valve Body Seperator Plate) (With Bonded Gaskets)	1	
	56290L	Bonded Plate/Gasket, [5R55S / 5R55W] (Valve Body Seperator Plate) 2004-Up	1	

	56290K	Bonded Plate/Gasket, [5R55S / 5R55W] (Valve Body Seperator Plate) (With Bonded Gaskets) (Code # 01) 2002-Up	1	
321	56280J	Gasket, [5R55N] (Valve Body to Seperator Plate) (Lower) 1999-Up	1	
321	56280K	Gasket, [5R55S / 5R55W] (Valve Body to Seperator Plate) (Lower) 2002-Up	1	
337	56116B	Lip Seal, [5R55N / 5R55S / 5R55W] (Overdrive Clutch) (Outer) & (Hi-Reverse Clutch) 1997-05	1	
362	56273B	O-Ring, [5R55N / 5R55S / 5R55W] (Intermediate Servo Cover) (Takes 2) 1999-Up	2	W702969-S300
367	56273C	O-Ring, [5R55N / 5R55S / 5R55W] (Overdrive Servo Cover) (Takes 1 or 2) 1999-Up	1-2	W703119-S300
363	3475A	D-Ring, [5R55S / 5R55W] (Reverse Servo Housing to Piston) 2002-05	1	
		TECHNICAL MANUALS		
	TM5R55N	Technical Manual, [5R55N] 1999-Up	1	ATSG
	TM5R55W/S	Technical Manual, [5R55S / 5R55W] 2002-Up	1	ATSG
		ELECTRICAL COMPONENTS		
410	56955J	Switch, [5R55N] (Neutral Safety-DTR) (12-Prong Connector) 1999-Up	1	XW4Z-7F293AA
410	56955K	Switch, [5R55S / 5R55W] (Neutral Safety-DTR) (11-Prong Connector) 2002-Up	1	1L2Z-7F293AA
414	56959J	Switch, [5R55N] (Fluid Pressure) (Reverse) 2000-Up	1	XW4Z-7E440AA
420	56954J	Solenoid Assembly, [5R55N] (12-Pin) 1999-Up (*Lincoln Only)	1	XW4Z-7G391AC
420	56954K	Solenoid Assembly, [5R55W / 5R55S] (12-Pin Connector) 2002-03	1	1L2Z-7G391AE
420	56954L	Solenoid Assembly, [5R55W / 5R55S] (12-PIn) 2004-Up (*56954L Will Retro to 2002)	1	4L2Z-7G391-AA
436	56974	Sensor, [5R55N / 5R55S / 5R55W] (Output Speed) 1999-Up	1	XW4Z-7H103AA
437	56951	Sensor, [5R55N] (Input-Case) (With 6-Ribs on Tip) 1999-Up	1	XW4Z-7M183AA
437	56974	Sensor, [5R55N / 5R55S / 5R55W] (Intermediate Speed) 1999-Up	1	XW4Z-7H103AA
438	56974	Sensor, [5R55S / 5R55W] (Input) (Cast # XW4P-7H103AA) 1999-Up	1-3	XW4Z-7H103AA
	56974WH	Repair Harness, [5R55N / 5R55S / 5R55W] (Sensor)	1-3	
		MISC. COMPONENTS		
493	30109A	Fill Plug, [5R55N / 5R55S / 5R55W] (Screw In) (Allen Head Type) (.670”OD) 1999-Up	1	
494	56811	Drain Plug, [5R55N / 5R55S / 5R55W] (Oil Pan) (1.420” Length) 1999-Up (*With Fluid Level Check Plug)	1	6L2Z-7A010-AA
507	K060	Valve, [5R55N / 5R55S / 5R55W] (Line Pressure Relief) 1999-Up	1	Superior
507	56200-03K	Valve Kit, [5R55N / 5R55S / 5R55W] (Pump Flow Control Valve / Line Pressure Relief) (Contains: O-Ring, Canister, Valve & Spring) 1999-Up	1	Sonnax
519	T519	Flex Plate Aligner, [5R55N / 5R55W]	1	
		HARD PARTS		
	56200J	Pump Assembly, [5R55N / 5R55S / 5R55W] (27 Teeth) (Overdrive Sun Gear) 99-Up	1	
510	56203J	Pump Body, [5R55N / 5R55S / 5R55W] (8-Bolt) (Aluminum) 1999-Up (Cast # RFXW4P-7B325-AA & D04YA-MA4)	1	
520	56204J	Stator W/Gears, [5R55N / 5R55S /5R55W] (6-Bolt) (Cast # XW4P-70043) 1999-Up	1	
530	K56201J	Pump Gear Set, [5R55N / 5R55S / 5R55W] (.610” Thick) (11 Teeth & 13 Teeth) 99-Up	1	
544	56202J	Pump Plate, [5R55N / 5R55S / 5R55W] (8-7/8”OD) (Has a 3/4” Hole off Center) 99-Up	1	1L2Z-7B472-AA
550	56284J	Drum, [5R55N / 5R55S / 5R55W] (Overdrive / Coast Clutch) (24 Teeth Sun Gear) (2-Clutch) (Cast Iron) (8-Notches) (.420” Wide Lugs) (*For #214 Drive Washer) 1999-Up	1	XW4Z-7L669AA
550	56284K	Drum, [5R55S / 5R55W] (Overdrive / Coast Clutch) (2-Clutch) (Cast Iron) (8-Notches) (.320” Wide Lugs) (*For #214 Drive Washer) 2002-Up	1	
554	56400J	Drum, [5R55N / 5R55S / 5R55W] (Forward Clutch) (5-Clutch) (5.815”OD) 1999-7/03	1	1L2Z-7A360-AA
555	56300J	Drum, [5R55N / 5R55S / 5R55W] (Direct Clutch) (5-Clutch) (Cast Iron) (6-1/4”OD at Lugs) (.150” Thick Lugs) 1999-Up	1	1L2Z-7D044-CA
556	K56510J	Drum, [5R55N / 5R55S / 5R55W] (Rear) (10 Lugs) (With Low Sprag) (30-Lug) (Plastic Cage) (Drum Cast # BWK XW4P-7E193-AA) 1999-Up	1	XW4Z-7C498AA
580	56413K	Planet, [5R55N / 5R55S / 5R55W] (Overdrive) (38 Teeth Sun Gear) (With Double Reluctor Ring & Hollow Pins) (Bearing Between Planet & Sun Gear Stays in Planet) 1999-Up	1	XW4Z-7B446BA

580	56413J	Planet, [5R55S / 5R55W] (Overdrive) (24 Teeth Sun Gear) (With Double Reluctor Ring & Hollow Pins) (*Bearing #215 Comes Out & Does Not Come With Planet) 02-Up	1	2L2Z-7B446-AA
580	K56413K	Planet Kit, [5R55S / 5R55W] (38 Teeth Sun Gear) 2002-Up (Contains: # 550, 214 ,610, 580, 590, 674) (*Retro Fits [5R55N / 5R55S / 5R55W] With 24 Teeth Sun Gear)	1	
582	56412J	Planet, [5R55N] (Forward) (6 Gear) (47 Teeth Sun Gear) 1999-Up (Cast # RFXW4P-70055-EB)	1	XW4Z-7A398AA
582	56412K	Planet, [5R55S / 5R55W] (Forward) (6 Gear) (55 Teeth Sun Gear) 2002-Up (Cast # RF1L2P-7D055-DA)	1	2L2Z-7A398-AA
582	K56412K	Planet Kit, [5R55S / 5R55W] (Forward) (6 Gear) (55 Teeth Sun Gear) 2002-Up (Contains: # 602, 592, 582, 622)	1	
584	56503J	Planet, [5R55N] (Rear) (5 Gear) (2-Pieces Housing) (1/2 Cast & 1/2 Steel) (Cast # RFXW4P-7D007-AA)	1	XW4Z-7D006AA
584	56503K	Planet, [5R55S / 5R55W] (Rear) (5 Gear) (10-Lugs) (1-Piece Steel Housing) (*Can Use 56503J) 2002-Up	1	1L2Z-7D006BA
590	56506A	Ring Gear, [5R55N / 5R55S / 5R55W] (Overdrive Planet) (For Plastic Cage Sprag) (24 Teeth Sun Gear) 1999-Up	1	F3TZ-7A153-A
590	56506B	Ring Gear, [5R55S / 5R55W] (Overdrive Planet) (For Plastic Caged Sprag) (38 Teeth Sun Gear)	1	2L2Z-7A153-AA
592	56409A	Ring Gear, [5R55N] (Forward Planet) (85 Teeth) (89-Clutch Splines) 1999-Up	1	YW4Z-7D392AA
592	56409B	Ring Gear, [5R55S / 5R55W] (Forward Planet) (101 Teeth) (89-Clutch Splines)	1	4L2Z-7D392-AA
594	56410J	Ring Gear, [5R55N] (Rear Planet) (83 Teeth) (1.393" Thick) 1999-Up	1	XW4Z-7A153AA
602	56426C	Hub, [5R55N] (Forward Ring Gear) (1.585"ID) (85 Teeth) (Steel) 1999-Up	1	
602	56426D	Hub, [5R55S / 5R55W] (Forward Ring Gear) (101 Teeth) (Steel) 2002-Up	1	
604	56505D	Hub, [5R55N / 5R55S / 5R55W] (Rear Ring Gear) (83 Teeth) (2.050" Neck Overdrive) 1999-Up	1	XW4Z-7B067-AA
610	56414	Sun Gear, [5R55N / 5R55S / 56R55W] (Overdrive) (24 Teeth) 1985-Up	1	F7RZ-7D063-AA
610	56414A	Sun Gear, [5R55S / 5R55W] (Overdrive) (38 Teeth) 2001-Up	1	2L2Z-7D063-AA
622	56423J	Shell, [5R55N] (With Sun Gear) (6-1/4"OD) (27 Teeth / 47 Teeth) (32-Sensor Holes) (*Has Bearing Inside)	1	2W4Z-7A019AA
622	56423JA	Shell, [5R55N] (With Sun Gear) (6-1/4"OD) (27 Teeth / 55 Teeth) (32-Sensor Holes) (*Has Bearing Inside)	1	YW4Z-7A019-AA
622	56423K	Shell, [5R55S / 5R55W] (With Sun Gear) (6-1/4"OD) (27 Teeth / 55 Teeth) (32-Sensor Holes) (*No Bearing)	1	4L2Z-7A019-AA
630	56952J	Center Support, [5R55N / 5R55W] (Has a Caged Bearing In Ring Area) 1999-Up	1	XW4Z-7A130-DA
		SPRAGS & ONE WAY CLUTCHES		
642	K56724J	Sprag Assembly, [5R55N] (Intermediate With Outer Race) 1999-Up	1	XW4Z-7A089-CA
650	56961B	Sprag, [5R55N / 5R55S / 5R55W] (Overdrive) (.460" Wide Lugs) (Plastic Cage) (With Brass Washer on One Side)	1	F7TZ-7A089-AB
652	56724J	Sprag Element, [5R55N] (Intermediate) 1999-Up	1	
654	56727J	Sprag Element, [5R55N / 5R55S / 5R55W] (Low) (30-Lugs) (Plastic Cage) 1999-Up	1	
		HARD PARTS (Continued)		
663	56865	Outer Race, [5R55N] (Intermediate Sprag) 1999-Up	1	
664	56600J	Inner Race, [5R55N / 5R55S / 5R55W] (Rear Sprag) (Press-In) (3.310"OD) (1.215" Thick) 1999-Up	1	
670	56411B	Input Shaft, [5R55N / 5R55S / 5R55W] (10-1/4" Long) 2001-Up	1	XW4Z-7017-AA
674	56958K	Center Shaft, [5R55N / 5R55S / 5R55W] (Overdrive) (24 Teeth Sun Gear) 1997-Up	1	XL2Z-7A658-AA
674	56958L	Center Shaft, [5R55S / 5R55W] (Overdrive) (38 Teeth Sun Gear) 2001-Up	1	2L2Z-7A658-AA
678	56655JA	Output Shaft, [5R55N] (2WD) (15-1/4" Long) (Bolt-on Yoke Type) 1999-Up	1	YW4Z-7060BA
678	56655K	Output Shaft, [5R55S / 5R55W] (2WD) (15-1/2" Long) 2002-Up	1	1L2Z-7060BA
678	56655L	Output Shaft, [5R55S / 5R55W] (4x4) 2002-Up	1	IL2Z-7060AA
690	56690J	Park Gear, [5R55N / 5R55S / 5R55W] (13-Lugs) (Press-on Pick-Up Reluctor Wheel) 1999-Up	1	
696	56690K	Park Gear, [5R55N] (13-Lugs) (24-Lug Pick-Up Reluctor Wheel Welded to Park Gear)	1	

698	56415J	Oil Dam, [5R55N / 5R55S / 5R55W] (Rear Planet) (1.737"OD) (.355" Thick) 1999-Up	1	XW4Z-7B176AA
		VALVE BODIES (REBUILT)		
740	FD-3329	Valve Body, [5R55N] (Without Solenoid Block) (Cast # RFXW4P-7A101-AJ, AF, AH) 1999-Up	1	
740	FD-3325	Valve Body, [5R55S / 5R55W] (Without Solenoid Block) (Cast # RF1L2P-7A101) 2002-Up	1	
		VALVE BODIES		
740	56947J	Valve Body, [5R55N] (Without Solenoids) (Cast # RFXW4P-7A101-AF,AH,AJ)	1	
740	56947K	Valve Body, [5R55S / 5R55W] (Without Solenoids) (Cast # RF1L2P-7A101)	1	1L2Z-7A100BA
		VALVE BODY COMPONENTS		
741	56947J-S3	Spring, [5R55N / 5R55S /5R55W] (TCC Control) (5 Per Pack)	1	Sonnax
741	56947J-S6	Spring, [5R55N / 5R55S / 5R55W] (Forward Engagement Control) (5 Per Pack)	1	Sonnax
741	56947J-S1	Spring, [5R55N] (4 / 3-Pre-Stroke Valve) 1999-Up	1	Sonnax
741	56947J-S2	Spring, [5R55N] (PCA Modulator Valve) (5 Per Pack) 1999-Up	1	Sonnax
741	56947J-S4	Spring, [5R55N] (TCC Modulator) (5 Per Pack) 1999-Up	1	Sonnax
741	56947J-S5	Spring, [5R55N] (TCC Back Pressure) (5 Per Pack) 1999-Up	1	Sonnax
741	56947J-S8	Spring, [5R55N] (Main Pressure Regulator) (*Increased Pressure) (5 Per Pack) 99-Up	1	Sonnax
741	56683	Manual Valve, [5R55N /5R55S /5R55W] (4-7/16") 1999-Up	1	
741	56947J-01K	TCC Modulator Plunger Valve & Sleeve, [5R55S / 5R55W] (OEM Ratio)	1	Sonnax
741	56947J-03K	TCC Modulator Plunger Valve & Sleeve, [5R55S / 5R55W] (Increased Ratio)	1	Sonnax
741	59947J-15K	Valve & Sleeve, [5R55N / 5R55S / 5R55W] (TCC Modulator) **(*Requires: F-56947J-TL15 & VB-FIX)**	1	Sonnax
741	56947-05K	Kit, [5R55N / 5R55S / 5R55W] (Oversized TCC Control Valve) **(*Requires: F-56947J-TL & VB-FIX)**	1	Sonnax
741	56947J-09K	Sleeve & Clip Kit, [5R55S / 5R55W] (Pressure Regulator Valve) **(*Must Use 56947J-TL9)**	1	Sonnax
	56947J-TL9	Reamers & Jig, (*For 56947-09K)	1	Sonnax
741	56947J-19K	VSF Modulator Control Assembly, [5R55S / 5R55W] (*Fits VFS1 & VSF2 Bore) (Contains: Valve, Sleeve, End Plug, Spring, & (2) O-Rings) **(*Must Use # F-56947J-TL19 & VB-Fix)**	1	Sonnax
	F-56947J-TL19	Reamer, Guide Pin & Jigs, (*For 56947J-19K)	1	Sonnax
	56947J-BST2	Bore Sizing Tool, [5R55N] (TCC Back Pressure Valve) (*Removes Ridges For Valve Operation)	1	Sonnax
		HARD PARTS (Continued)		
746	56688	Plate, [5R55N] (Solenoid Block to Valve Body) (8" Long) 1999-Up	1	
760	56361J	Case, [5R55N] (3-1/2" Top Bolts) (Round Top) (Jaguar>4.0L / Lincoln>3.9L) (*Fill Plug In Extension Housing)	1	YW4Z-7005-CA
760	56361JA	Case, [5R55N] (3-1/4" Top Bolts) (Flat Top) (Jaguar>3.0L)	1	
760	56361K	Case, [5R55S /5R55W] (3-1/2" Top Bolts) (Flat Top) (4.0L) (*2WD Only) (7-Rear Bolt Holes For Extension Housing) (*Filler Plug In Case on Passenger Side Rear) 2002-Up	1	1L2Z-7005BD
760	56361KA	Case, [5R55S / 5R55W] (3-1/2" Top Bolts) (Flat Top) (4.0L) (2WD & 4x4) (7-Rear Bolt Holes For Extension Housing) & (7-Holes For Transfer Case) (*Fill Plug In Case Passenger Side Rear)	1	1L2Z-7005DD
760	56361KB	Case, [5R55S / 5R55W] (3-1/2" Top Bolts) (Flat Top) (4.0L) (2WD & 4x4) (7-Rear Bolt Holes For Extension Housing) & (7-Holes For Transfer Case) (*No Fill Plug In Case)	1	
760	56361KC	Case, [5R55S / 5R55W] (5-1/8" Top Bolts) (Flat Top) (4.6L) (2WD & 4x4) (7-Rear Bolt Holes For Extension Housing) & (7-Holes For Transfer Case) (*No Fill Plug In Case on Passenger Side)	1	
760	56361KD	Case, [5R55S / 5R55W] (5-1/8" Top Bolts) (Flat Top) (4.6L) (2WD & 4x4) (7-Rear Bolt Holes For Extension Housing) & (7-Holes For Transfer Case) (*Has Fill Plug In Case Passenger Side)	1	
		CASE COMPONENTS		

5R55S/5R55W/5R55N

	56361J-01K	Repair Sleeve Kit, [5R55N / 5R55S / 5R55W] (Intermediate & Overdrive Servo) **(*Must Use # S-56361J-TL & Fixture # Servo-Fix)**	1	Sonnax
	56361J-TL	Reamer Kit, [5R55N / 5R55S / 5R55W] (Servo) (Contains: 2-Reamers, 1-Jig, 1-Guide Pin, 1-Handle, 1-Pilot, & 2- O-Rings) (*For 56361J-01K) **(*Must Use T-Servo-Fix)**	1	Sonnax
	SERVO-FIX	Servo Pin Bore Reaming Fixture, [5R55N / 5R55S / 5R55W]	1	Sonnax
	T5699W	Servo Pin Bore Repair System, [5R55W / 5R55S / 5R55N] (Overdrive & Intermediate) (Includes: 3-Overdrive & Intermediate Sleeves)	1	
	56095	Bushing, Repair, [5R55W / 5R55S / 5R55N] (Overdrive) **(*Use With T5699W Tool)**	1	
	56096	Bushing, Repair, [5R55W / 5R55S / 5R55N] (Intermediate) **(*Use With T5699W Tool)**	1	
	T-0528	Adapter, [5R55N / 5R55S / 5R55W] (Fluid Fill)	1	
		HARD PARTS (Continued)		
765	56850J	Pan, [5R55N] (3-3/8" Deep) (Flat Bottom With Ribs) 1999-Up	1	1W4Z-7A194AA
765	56850K	Pan, [5R55S / 5R55W] (4-3/4" Deep at the Deepest Point) 2002-Up (*SUV)	1	4W4Z-7A194-AA
765	56850L	Pan, [5R55S] 2003-Up (*Cars)	1	
765	56811C	Plug, [5R55N / 5R55S / 5R55W] (Fluid Level Check Plug) (Small) 1999-Up	1	W704999-S439
770	56370J	Extension Housing, [5R55N] (2WD) 1999-Up	1	XW4Z-7A039AA
770	56371K	Extension Housing, [5R55S / 5R55W] (4x4) 1999-Up	1	
770	56370K	Extension Housing, [5R55S / 5R55W] (2WD) (6-1/2" Long) (2-Bolt Mount) 2002-Up	1	1L2Z-7A039CA
	56948	Nut, [5R55N / 5R55S / 5R55W] (Yoke to Output Shaft) (.729"ID) 1999-Up	1	W701357-S309
841	56951	Yoke, [5R55N / 5R55S / 5R55W] (Output Shaft) 1999-Up	1	XW4Z-7089-AA
847	56990J	Pick-Up Wheel, [5R55N / 5R55S / 5R55W] (Output Speed Reluctor) (24 Teeth) (.564" Thick) 1999-Up	1	
	K56928J	Snap Ring Kit, [5R55N / 5R55S / 5R55W] 1999-Up	1	
868	56603K	Snap Ring, [5R55N / 5R55S / 5R55W] (Center Shaft to Ring Gear)	1	W702037-S300
882	56608K	Snap Ring, [5R55N / 5R55S / 5R55W] (Forward Hub to Ring Gear)	1	XW4Z-7G375AA
901	56891	Spring, [5R55N / 5R55S / 5R55W] (Overdrive & Intermediate Servos) (Yellow) (1.615" Long) (.730"OD) 1999-Up	2	XW4Z-7D028-DA
902	56529J	Piston, [5R55N / 5R55S / 5R55W] (Overdrive Servo) (2.915"OD) (Single Lip Type) 1999-Up	1	XW4Z-7D021LA
902	56529K	Piston, [5R55N / 5R55S / 5R55W] (Overdrive Servo) (2.575"OD) (Double Lip Type) 2002-Up	1	XW4Z-7D021KA
904	56838J	Cover, [5R55N] (Overdrive Servo) (2-O-Rings) (2.520"ID) (GA8 Casting) 1999-Up	1	XW4Z-7D027DB
904	56838K	Cover, [5R55S / 5R55W] (Overdrive Servo) (1-O-Ring) (2.560"ID) (GA8 Casting) 2002-Up	1	1L2Z-7D027HA
906	56891	Spring, [5R55W / 5R55S / 5R55N] (Intermediate Servo)	1	
907	56528P	Piston, [5R55N] (Intermediate Servo) (Bonded) (2.770"OD)	1	XW4Z-7D021-HA
907	56528Q	PIston, [5R55N] (Intermediate Servo) (Bonded) (2.570"OD) (For Cover Stamped EA8)	1	XW4Z-7D021-JA
907	56528S	Piston, [5R55S / 5R55W] (Intermediate Servo) (Bonded) (2.810"OD) (Cast # 1L2P-7E221-CA) 2002-Up	1	1L2Z-7D021-CA
907	56528T	Piston, [5R55S / 5R55W] (Intermediate Servo) (Bonded) (2.525"OD) (Lincoln LS) 2003-Up	1	3W4Z-7D021-AA
909	56538L	Cover, [5R55S / 5R55W] (Intermediate Servo) (1-O-Ring) (Cast #CAO) 2002-Up	1	1L2Z-7D027DA
910	K56530J	Servo Assembly, [5R55N] (Reverse Servo) (Cast #2L2P-7D036 on Inside Bore of # 914)	1	
910	K56530K	Servo Assembly, [5R55N] (Reverse Servo) (Cast # XW4P-7D036 on Inside Bore of # 914)	1	
910	K56530L	Servo Assembly, [5R55S / 5R55W] (Reverse Servo) (Cast # 1L2P-7D036-AB on Inside Bore of #914)	1	
910	K56530LA	Servo Assembly, [5R55S / 5R55W] (Reverse Servo) (Cast # 2L2P-7D036-AB on Inside Bore of #914)	1	
911	56892	Spring, [5R55N] (Reverse Servo) (6-5/8" Long) 1999-Up	1	XW4Z-7D466AA
911	56893	Spring, [5R55S / 5R55W] (Reverse Servo) (7-1/2" Long) 2002-Up	1	1L2Z-7D446-AA

912	56530J	Piston, [5R55N] (Reverse Servo) (Bonded) (1.175"ID Cover) 1999-Up	1	XW4Z-7D189AA
912	56530K	Piston, [5R55S / 5R55W] (Reverse Servo) (Bonded) (1.655"ID Cover) 2002-03	1	1L2Z-7D189AA
912	56530L	Piston, [5R55S / 5R55W] (Reverse Servo) (Bonded) (1.655"ID) 2004-Up (*Retro Fits 2002-Up)	1	
913	56539J	Cover, [5R55N / 5R55S / 5R55W] (Reverse Servo) (Aluminum) (7.820"OD) (Cast # XW4P-7D372AA) 1999-Up	1	XW4Z-7D372-AA
914	56531K	Housing, [5R55N] (Reverse Servo) (Cast # XW4P-7D036-AB) 1999-Up	1	XW4Z-7D036AC
914	56531L	Housing, [5R55S / 5R55W] (Reverse Servo) (Cast # 1L2P-7D036-AB) 2002-Up	1	1L2Z-7D036AB
916	K56689	Strut, [5R55N / 5R55S /5R55W] (Intermediate / Overdrive Servos) (1.600" Long Piston Side) 1999-Up	2	XW4Z-7D029AB
916	K56689A	Strut, [5R55N / 5R55S / 5R55W] (Intermediate / Overdrive Servos) (1.570" Long Adjustment Side) 1999-Up	2	XW4Z-7D029BB
917	K56689B	Strut, [5R55N / 5R55S/ 5R55W] (Reverse Lever Assembly) (1.735" Long) (.335"ID Hole) 1999-Up	1	
961	56884J	Piston, [5R55N / 5R55S / 5R55W] (Coast & Direct Clutch) (Cast # 90DT) 1999-Up	2	FOTZ-7A262B
962	56930J	Retainer, [5R55N] (Intermediate Piston) (Aluminum) (6-1/4"OD) (Cast # XW4P-7N061-DA) 1999-Up	1	
963	56531J	Piston, [5R55N] (Intermediate Clutch) (Bonded) (5-15/16"OD) 1999-Up	1	
964	56886B	Piston, [5R55N / 5R55S / 5R55W] (Forward Clutch) (Bonded) (5.090"OD) (With Check Ball) 1999-07/05	1	6L2Z-7A262BA
971	K56882	Return Spring Set, [5R55N /5R55S / 5R55W] (Coast & Direct Clutch) (20-Pieces) 1999-Up	1	XW4Z-7A480BA
972	56810J	Return Spring, [5R55N] (Intermediate) (19-Fingers, Split Type) (.053" Thick) 1999-Up	1	XW4Z-7B070-CA
974	56970	Retainer W/Springs, [5R55N / 5R55S / 5R55W] (Forward Clutch) (3.050"OD) (10-Springs) 1999-Up	1	1L2Z-7G299-AA
981	56921	Retainer, [5R55N / 5R55S / 5R55W] (Coast Piston Spring) (3.540"OD) 1999-Up	2	E5TZ-7A527A
985	56921	Retainer, [5R55N / 5R55S / 5R55W] (Direct Piston Spring) (3.540"OD) 1999-Up	1	
991	K56676J	Linkage Assembly, [5R55N / 5R55S / 5R55W] (Internal) (Cast # on Rooster Comb Is 1L2P-7C494-BA or XW4P-7C494-AC) 1999-Up	1	
991	56687J	Detent Spring, [5R55N / 5R55S / 5R55W] (4" Long) 1999-Up	1	
991	56684J	Rooster Comb, [5R55N / 5R55S / 5R55W] (Cast # 1L2P-7C494-BA or XW4P-7C494-AC) 1999-Up	1	
991	56675J	Shaft, [5R55S / 5R55W] (Manual) (Both Ends Threaded) (3.880" Long) 2002-Up	1	4W4Z-7A256-AA
992	56675JA	Lever, [5R55S / 5R55W] (External Shift) (Cast # L2P-7A257-AB) 2002-Up	1	XW4Z-7A256-AA
994	56677J	Park Rod, [5R55N / 5R55S / 5R55W] (9-3/4" Long) 1999-Up	1	
995	K56678J	Park Pawl Assembly, [5R55N / 5R55S / 5R55W] (Pin Is 1.326" Long) (3-Pieces) 1999-Up	1	
995	K56678K	Park Pawl Assembly, [5R55N / 5R55S / 5R55W] (Pin Is 2.325" Long) (3-Pieces) 1999-Up	1	
996	56281J	Fitting, [5R55N / 5R55S / 5R55W] (Cooler Line) (26mm) (Screw-In) 1999-Up	2	

C-6

RWD 3 Speed

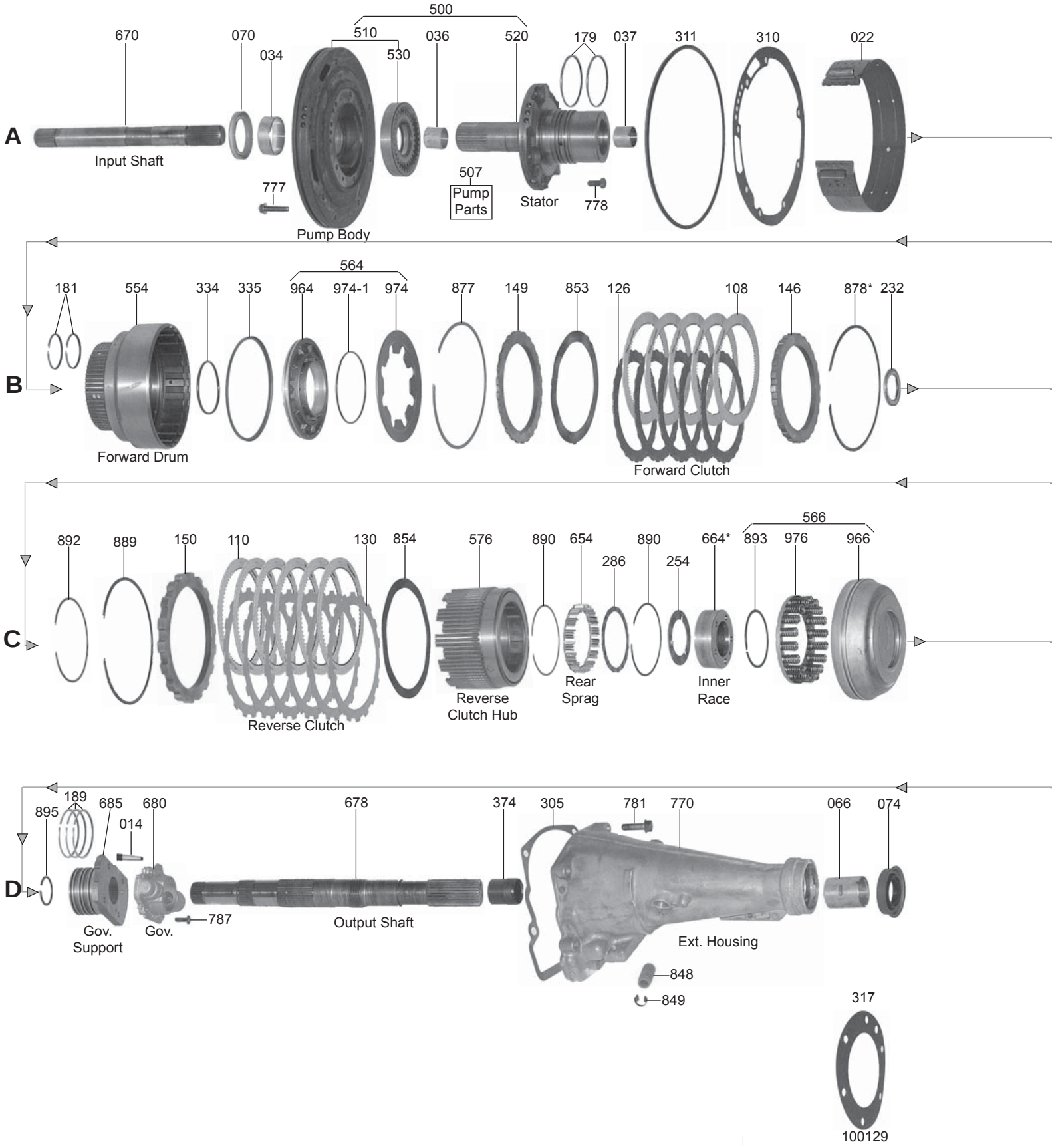

RWD 3 Speed

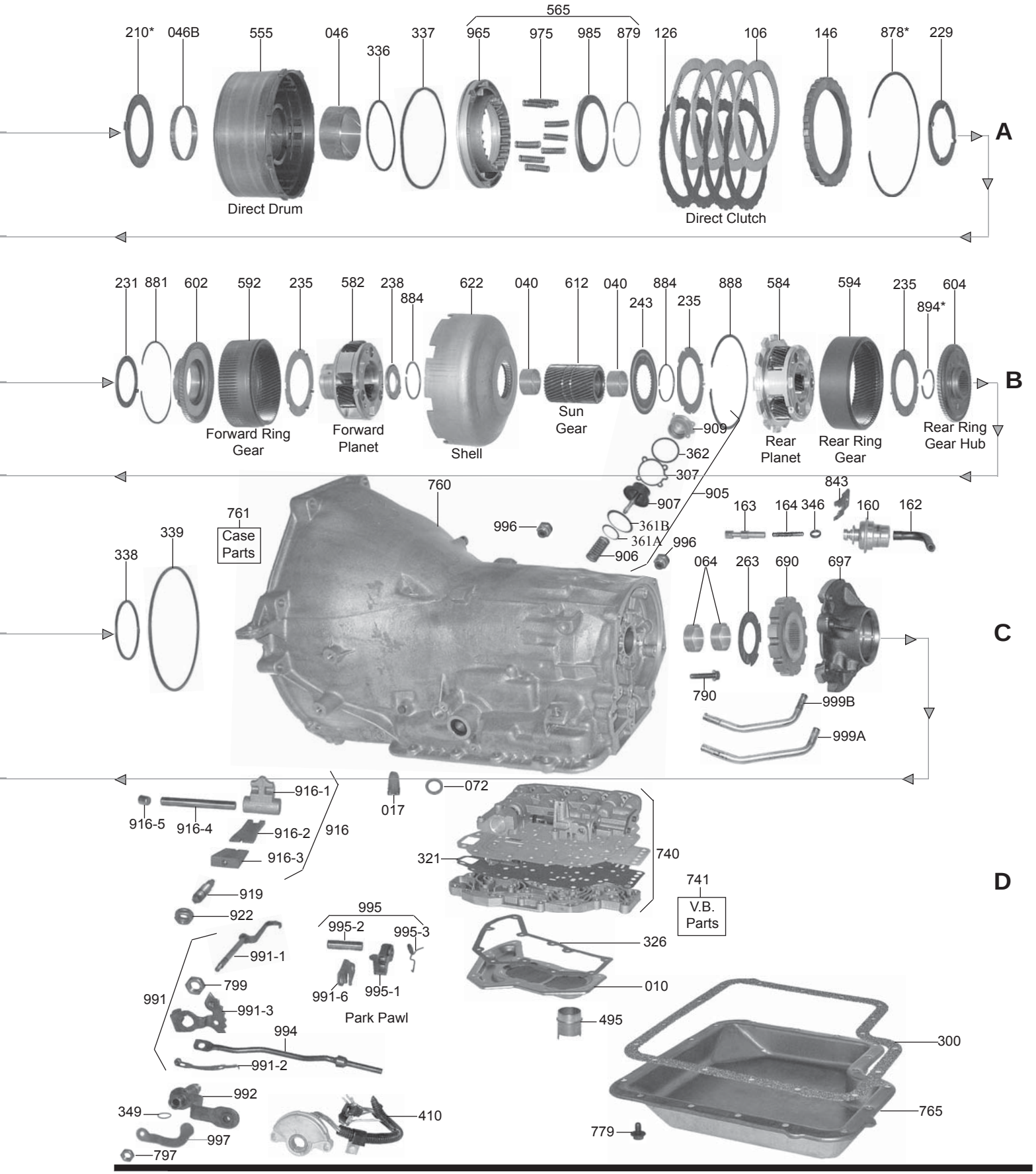
565
210*
046B
555
046
336
337
965
975
985
879
126
106
146
878*
229
A
Direct Drum
Direct Clutch
231
881
602
592
235
582
238
884
622
040
612
040
243
884
235
888
584
594
235
894*
604
B
Forward Ring Gear
Forward Planet
Shell
Sun Gear
Rear Planet
Rear Ring Gear
Rear Ring Gear Hub
909
362
307
905
907
361B
361A
906
996
760
761
Case Parts
339
338
843
163
164
346
160
162
064
263
690
697
C
790
999B
999A
916-1
916-5
916-4
916-2
916-3
916
017
072
321
740
741
V.B. Parts
D
919
922
995
995-2
995-3
991-1
326
799
991
991-3
991-6
995-1
Park Pawl
010
994
991-2
495
300
992
349
997
797
410
765
779

E4OD/4R100

RWD 4 Speed

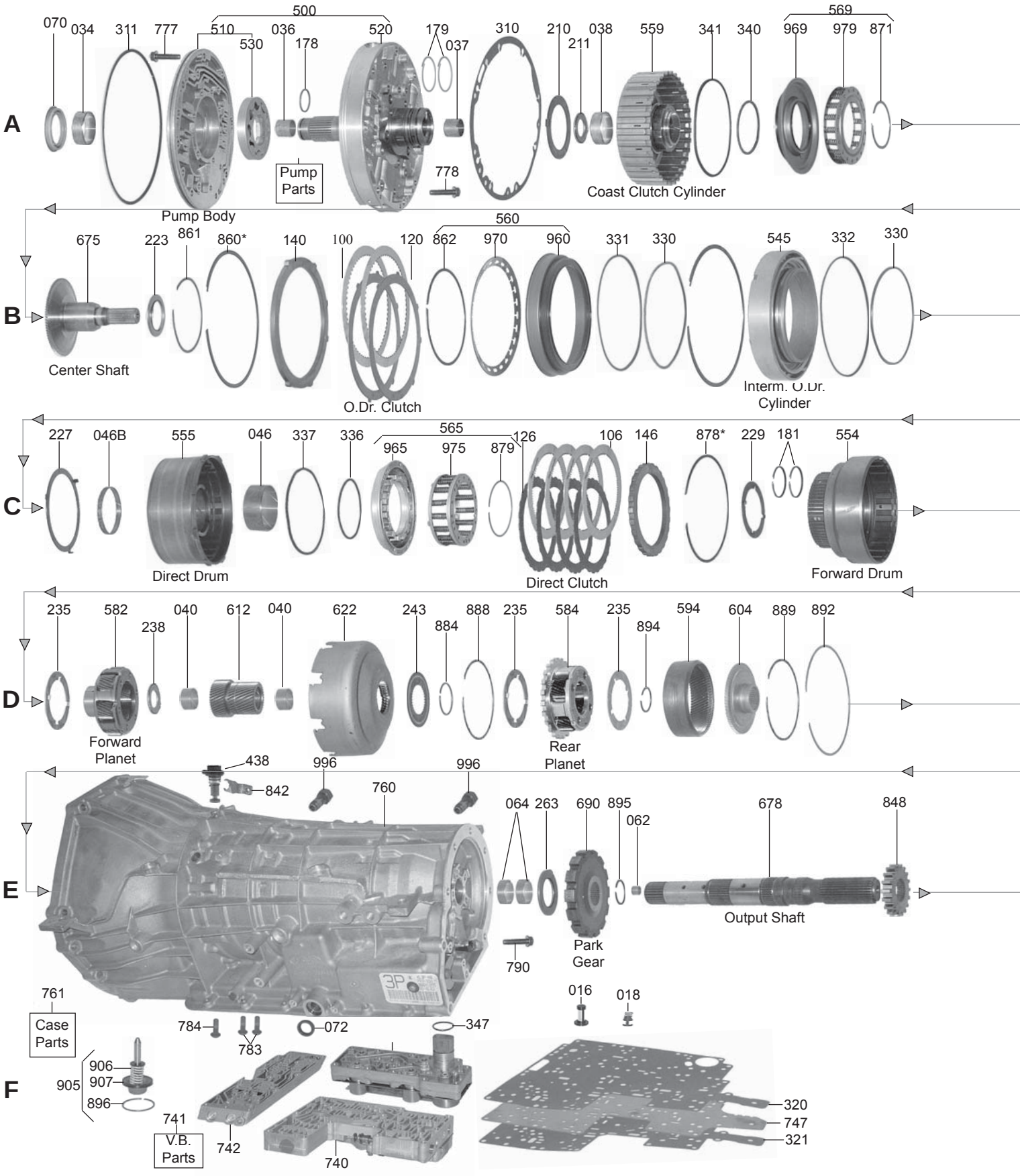

RWD 4 Speed

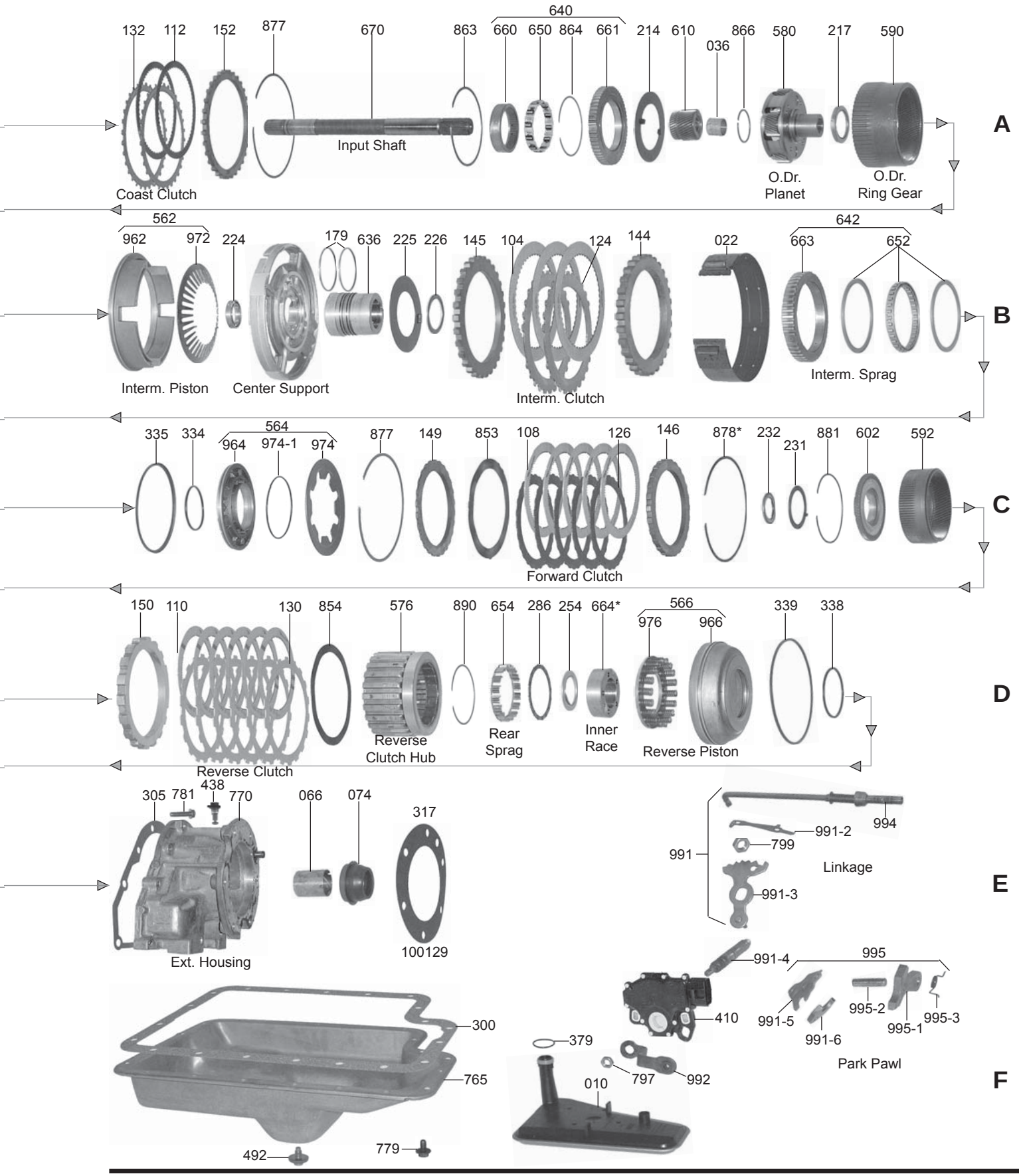
A
132
112
152
877
670
863
640
660
650
864
661
214
610
036
866
580
217
590
Input Shaft
Coast Clutch
O.Dr. Planet
O.Dr. Ring Gear
B
562
962
972
224
179
636
225
226
145
104
124
144
022
642
663
652
Interm. Piston
Center Support
Interm. Clutch
Interm. Sprag
C
335
334
564
964
974-1
974
877
149
853
108
126
146
878*
232
231
881
602
592
Forward Clutch
D
150
110
130
854
576
890
654
286
254
664*
566
976
966
339
338
Reverse Clutch
Reverse Clutch Hub
Rear Sprag
Inner Race
Reverse Piston
E
305
781
438
770
066
074
317
Ext. Housing
100129
991
991-2
994
799
Linkage
991-3
F
991-4
995
410
991-5
991-6
995-2
995-1
995-3
Park Pawl
379
797
992
010
300
765
492
779

C-6/E4OD/4R100

ILL#	PART#	DESCRIPTION	QTY	REF #
		PAPER & RUBBER KIT		
	K36900A-1	Paper & Rubber Kit, [C-6] 1966-E76	1	
	K36900D-1	Paper & Rubber Kit, (Combo) 1968-Up	1	
	K36900E-1	Paper & Rubber Kit, [E4OD] 1989-95	1	
	K36900F-1	Paper & Rubber Kit, [E4OD / 4R100] 1996-Up	1	
		OVERHAUL KITS		
	K36900A	Overhaul Kit, [C-6] 1966-E76	1	
	K36900D	Overhaul Kit, [C-6] (Combo) 1968-Up	1	
	K36900E	Overhaul Kit, [E4OD] 1989-95	1	
	K36900F	Overhaul Kit, [E4OD / 4R100] 1996-Up	1	
	K36900FP	Overhaul, [E4OD / 4R100] (With Pistons) 1998-Up (2.506" Rear Seal) **(F-Series "Super Duty" *Use 36157)** 1999-Up (3.180" Rear Seal)	1	
	K36942	Kit, Bonded Piston, [4R100] (1-Coast & 1-Overdrive) 1998-Up	1	
		MASTER L/STEEL KIT		
	DK3600-S	Master L/Steels, [C-6] 1966-E67	1	
	DK3600A-S	Master L/Steels, [C-6] L1967-E76	1	
	DK3600B-S	Master L/Steels, [C-6] L1976-Up	1	
	DK3600E-S	Master L/Steels, [E4OD] 1989-95	1	
	DK3600F-S	Master L/Steels, [E4OD] (72 Teeth) (Reverse Friction) 1996-4/97	1	
	DK3600HP-S	Master L/Steels, [E4OD / 4R100] (With Pistons) (24 Teeth) (Reverse Friction) (Cast Iron Coast) 5/1997-99	1	
	DK3600H-S	Master L/Steels, [E4OD / 4R100] (Without Pistons) (24 Teeth) (Reverse Friction) (Cast Iron Coast) 5/1997-99	1	
	DK3600JP-S	Master L/Steels, [4R100] (With Pistons) (With Stamped Steel Coast Drum) 1/1998-00	1	
	DK3600J-S	Master L/Steels, [4R100] (Without Pistons) (With Stamped Steel Coast Drum) 1/1998-00	1	
	DK3600KP-S	Master L/Steels, [4R100] (With Pistons) (With Stamped Steel Coast Drum) 2001-Up	1	
	DK3600K-S	Master L/Steels, [4R100] (Without Pistons) (With Stamped Steel Coast Drum) 2001-Up	1	
		MASTER W/STEEL KIT		
	DK3600	Master W/Steels, [C-6] 1966-E67	1	
	DK3600A	Master W/Steels, [C-6] L1967-E76	1	
	DK3600B	Master W/Steels, [C-6] L1976-Up	1	
	DK3600E	Master W/Steels, [E4OD] 1989-95	1	
	DK3600F	Master W/Steels, [E4OD] (72 Teeth) (Reverse Friction) 1996-4/97	1	
	DK3600HP	Master W/Steels, [E4OD / 4R100] (With Pistons) (24 Teeth) (Reverse Friction) (Cast Iron Coast Drum) 5/1997-99	1	
	DK3600H	Master W/Steels, [E4OD / 4R100] (Without Pistons) (24 Teeth) (Reverse Friction) (Cast Iron Coast) 5/1997-99	1	
	DK3600JP	Master W/Steels, [4R100] (With Pistons) (With Stamped Steel Coast Drum) 1/1998-00	1	
	DK3600J	Master W/Steels, [4R100] (Without Pistons) (With Stamped Steel Coast Drum) 1/98-00	1	
	DK3600KP	Master W/Steels, [4R100] (With Pistons) (With Stamped Steel Coast Drum) 2001-Up	1	
	DK3600K	Master W/Steels, [4R100] (Without Pistons) (With Stamped Steel Coast Drum) 2001-Up	1	
		FILTER		
010	36423A	Filter, [C-6] (2WD) 1966-75	1	C6AZ-7A098-B

010	36423B	Filter, [C-6] (2WD) 1976-Up	1	D5AZ-7A098-A
010	36423C	Filter, [C-6] (4x4) 1973-Up	1	D3TZ-7A098-A
010	36423E	Filter, [E4OD / 4R100] (2WD) (Sealed Power) 1989-Up	1	E9TZ-7G186-BA
010	36423F	Filter, [E4OD / 4R100] (4X4) (Sealed Power) 1989-Up	1	E9TZ-7A098-B
010	36423EP	Filter, [E4OD / 4R100] (2WD) (Plastic OEM Style) 1989-Up	1	
010	36423FP	Filter, [E4OD / 4R100] (4WD) (Plastic OEM Style) 1989-Up	1	
		FILTER KIT		
	FK36423A	Filter Kit, [C-6] (2WD) 1966-75	1	
	FK36423B	Filter Kit, [C-6] (2WD) 1976-Up	1	
	FK36423C	Filter Kit, [C-6] (4x4) 1973-Up	1	
	FK36423E	Filter Kit, [E4OD / 4R100] (2WD) 1989-Up	1	
	FK36423F	Filter Kit, [E4OD / 4R100] (4x4) 1989-Up	1	
	FK36423EP	Filter Kit, [E4OD / 4R100] (2WD) (Plastic OEM Style) 1989-Up	1	
	FK36423FP	Filter Kit, [E4OD / 4R100] (4WD) (Plastic OEM Style) 1989-Up	1	
		MISC. FILTERS		
014	36712	Screen, [C-6] (Governor)	1	D0AZ-7E387-A
016	36712E	Screen, [E4OD / 4R100] (Solenoids) (*Fits on Seperator Plate)	1	E9TZ-7G308-B
017	36423G	Screen, [C-6] (Pump Inlet)	1	
018	36713	Screen W/Spring, [E4OD] (Intermediate Accumulator) (*In Case Under Spacer Plate) 1991-96	1	F1TZ-7H194-A
		BANDS		
022	36320F	Band, [C-6] (Intermediate) (Flex)	1	D9AZ-7D034-B
022	36320A	Band, [C-6] (Intermediate) (Rigid) (2” Wide)	1	
022	36320E	Band, [E4OD / 4R100] (Intermediate) (Flex) 1989-Up	1	E9TZ-7D034-A
022	RPS36320HP	Band, [C-6] (Intermediate) (Flex) (*Raybestos Pro Series)	1	
022	36320S	Band, [C-6] (Intermediate) (Slip-on or Snap Band)	1	
		BUSHINGS		
	K36905A	Bushing Kit, [C-6] 1966-Up	1	
	K36905E	Bushing Kit, [E4OD / 4R100] 1989-97	1	
	K36905F	Bushing Kit, [4R100] 1998-Up	1	
034	36002B	Bushing, [C-6 / E4OD] (Pump Body) (Babbit) (.755” Tall)	1	C6AZ-7B258-A
034	36002	Bushing, [C-6 / E4OD] (Pump Body) (Bronze) (.755” Tall)	1	E0AZ-7B258-A
034	76001	Bushing, [E4OD / 4R100] (Pump) (Bronze) (.695” Tall) 1996-Up	1	
036	36000A	Bushing, [C-6 / E4OD / 4R100] (Stator) (Front) & (Overdrive Sun Gear)	1-2	C6AZ-7B261-C
037	36001A	Bushing, [C-6 / E4OD / 4R100] (Stator) (Rear)	1	C6AZ-7D018-A
038	56002A	Bushing, [E4OD] (Coast Clutch Drum) (Bronze) (*For Cast Iron Drum) 1989-97	1	
038	36016	Bushing, [E4OD / 4R100] (Coast Clutch Drum) (Bronze) (*For Stamped Steel Drum) 1998-Up	1	
040	36005	Bushing, [C-6 / E4OD / 4R100] (Sun Gear) (Primary)	2	C6AZ-7D065-A
046	36003	Bushing, [C-6 / E40D / 4R100] (Direct Drum) (Rear) (1.241” Wide) 1989-00	1	C6AZ-7D046-A
046	36003A	Bushing, [E4OD / 4R100] (Direct Drum) (Rear) (1.110” Wide)	1	
046B	36004	Bushing, [C-6 / E4OD / 4R100] (Direct Drum) (Front) (.3/8” Wide)	1	C6AZ-7D046-B
062	56006	Bushing, [E4OD] (Output Shaft Pilot)	1	
062	56006N	Bearing, [E4OD] (Output Shaft Pilot)	1	
064	36007H	Bushing, [C-6 / E4OD / 4R100] (Case) (Front) (With 3-Oil Grooves)	1-2	C6AZ-7025-D

C-6/E4OD/4R100

064	36008H	Bushing, [C-6 / E4OD / 4R100] (Case) (Rear) (Without Oil Groove)	1	C6AZ-7025-B
064	36008A	Bushing, [C-6 / E4OD / 4R100] (Case) (Rear) (With 1-Oil Groove)	1	
064	36010	Bushing, [C-6 / E4OD] (Case) (1-Piece Type) 1989-Up	1	Sonnax
064	36008AX	Bushing, [C-6 / E4OD] (Case) (1-Piece Type) (Oversized) **(*Use With T36008A,T36605-03,T36605-04)**	1	Sonnax
064	36008D	Bushing, [E4OD / 4R100] (Case) **(*Sold Seperately)** 1995-Up	1	Sonnax
064	36008C	Bushing, [E4OD / 4R100] (Case) (Late 1-Piece Type) (Oversized) 1995-Up **(*Used With T36008A,T36605-03,T36605-04)**	1	Sonnax
066	6023A	Bushing, [C-6 / E4OD / 4R100] (Extension Housing) (1.690"ID) (Bronze)	1	B5AZ-7A034-A
066	6023	Bushing, [C-6] (Extension Housing) (Babbit)	1	C1VY-7A034-A
066	36023	Bushing, [4R100] (Extension Housing) (Super Duty) (1.890"ID) (Teflon Coated) 1998-Up	1	
066	6023T	Bushing, [C-6 / E4OD / 4R100] (Extension Housing) (Teflon Coated)	1	
	T36008A	Installation Tool, (Rear) (Case Bushing)	1	Sonnax
	T36605-03	Reamer, (Case Bushing) (*For 36008AX & 36008C)	1	Sonnax
	T36605-04	Fixture, (Case Bushing Reamer) (*For T-36605-03)	1	Sonnax
		METAL CLAD SEALS		
070	16601A	Seal, [C-6] (Front Pump) (Without Flange)	1	C2AZ-7A248-A
070	16601F	Seal, [C-6] (Front Pump) (With Flange)	1	C3OP-7A248-A
070	36151	Seal, [E4OD / 4R100] (Front Pump) (With Flange) (Black Viton) 1992-Up	1	
072	6507A	Seal, [C-6 / E4OD / 4R100] (Linkage Shaft)	1	D5AZ-7B498-A
074	34743C	Seal, [C-6 / E4OD / 4R100] (Rear) (2.506"OD) (Without Boot)	1	D5AZ-7052-A
074	16695C	Seal, [C-6 / E4OD / 4R100] (Rear) (2.506"OD) (With Boot)	1	D5AZ-7052-A
074	6557L	Seal, [C-6] (Rear) (3.066"OD) (Truck With Bolt-on Yoke) 1968-Up	1	B3TZ-7A011-A
074	24910	Seal, [C-6] (With Brake Drum)	1	
074	36157	Seal, [4R100] (Rear) (3.180"OD) (*Super Duty) 1998-Up	1	F81Z-7052-AA
		FRICTION CLUTCH		
100	36103	Friction, [E4OD / 4R100] (Overdrive Clutch) (.078") (64 Teeth) (With Cast Drum) 1989-99	2	E9TZ-7B164-A
100	36103B	Friction, [4R100] (Overdrive Clutch) (.078") (32 Teeth) (With Stamped Steel) 1998-Up	2-3	F81P-7B164-AA
100	36103BHP	Friction, [4R100] (Overdrive Clutch) (.078") (32 Teeth) (Hi-Performance) 1998-Up	2-3	
104	36105	Friction, [E4OD] (Intermediate Clutch) (.078") (50 Teeth) (Waffle) 1989-4/97	3	E9TZ-7B164-B
104	36105A	Friction, [E4OD / 4R100] (Intermediate Clutch) (.078") (50 Teeth) (Hi-Energy) 5/1997-00 (*Retros to 1989)	3	F75P-7F219-BA
104	36105B	Friction, [4R100] (Intermediate Clutch) (.076") (60Teeth) (Hi-Energy) (*Does Not Fit Mech Diode) 2001-Up	3	
104	36105HE	Friction, [4R100] (Intermediate Clutch) (.076") (60 Teeth) (Hi-Energy) (*Fits Mech Diode) 2001 only*	3	
104	36105AHP	Friction, [E4OD / 4R100] (Intermediate Clutch) (.078") (50 Teeth) (Hi-Performance) 1989-Up	3	
104	K36105	Friction/Steel Kit, [E4OD / 4R100] (Intermediate Clutch) (Hi-Performance) (Power Pack) (Includes: Pressure Plates, 1-Sided Friction, & 1-Sided Steel) 1999-Up	1	26756
104	K36105Z	Friction/Steel Kit, [E4OD / 4R100] (Intermediate Clutch) ("Z" Pak) 1989-Up	1	
106	36304	Friction, [C-6 / E4OD / 4R100] (Direct Clutch) (.077") (Grooved) (Tan) 1996-Up	3-5	
106	K36304	Friction & Steel Kit, [C-6 / E4OD] (Direct Clutch) (.063") (Smooth) (Tan) (Power Pack)	1	26757
106	K36404XHP	Friction Kit, [C-6 / E4OD] (Direct Clutch) (.063") (Hi-Performance Red) (Power Pack) (Kolene Steels)	1	26757HP
106	36304D	Friction, [E4OD / 4R100] (Direct Clutch) (.077") (Smooth) 1989-95	4	E9TZ-7B164-D
106	36304HP	Friction, [C-6 / E4OD] (Direct Clutch) (.077") (Hi-Performance Red) 1966-Up	3-4	
106	K36304HP	Friction Kit, [C-6 / E4OD] (Direct Clutch) (.077") (Hi-Performance) (5 Per Kit)		26742UP5
108	36404	Friction, [C-6] (Forward Clutch) (.060") 1966-E67	4-5	

108	36404A	Friction, [C-6] (Forward Clutch) (.061") (Smooth) 1967-E76	3-5	D2AZ-7B164-A
108	36404AHP	Friction, [C-6] (Forward Clutch) (.061") (Hi-Performance Red) 1967-E76	3-5	26740
108	K36404AHP	Friction Kit, [C-6] (Forward Clutch) (.075") (Hi-Performance Red) L1967-E76, (5 Per Kit)	1	26740UP5
108	36404B	Friction, [C-6] (Forward Clutch) (.075") (Smooth) L1976-Up	4	D6AZ-7B164-B
108	36404CHP	Friction, [C-6 / E4OD] (Forward Clutch) (.075") (Hi-Performance Red) (Hardened Spline) L1976-Up	4	26746
108	36404C	Friction, [C-6 / E4OD / 4R100] (Forward Clutch) (.075") (Hardcore) (Smooth)	4-5	F2TP-7E311-AA
108	K36404CHP	Friction & Steel Kit, [C-6 / E4OD] (Forward Clutch) (.063") (Hi-Performance Red) (Power Pack) (Red Friction) (Kolene Steels)	1	26755
110	36504A	Friction, [C-6 / E4OD] (Reverse Clutch) (.078") (72 Teeth) 1966-E97	4-6	D6AZ-7B164-A
110	36504B	Friction, [E4OD / 4R100] (Reverse Clutch} (.078") (24 Teeth) 1998-Up	4-6	F7TZ-7B164-AA
110	36504HP	Friction, [C-6 / E4OD] (Reverse Clutch) (.075") (72 Teeth) (Hi-Performance Red) 66-E97	4-6	26744
110	K36504HP	Friction Kit, [C-6 / E4OD] (Reverse Clutch) (.075") (72 Teeth) (Hi-Performance Red) 1966-E97 (6 Per Kit)	1	26744UP6
112	36101	Friction, [E4OD / 4R100] (Coast Clutch) (.078") 1989-Up	2-3	E9TZ-7B164-C
112	36101HP	Friction, [E4OD / 4R100] (Coast Clutch) (.078") (Hi-Performance Red) 1989-Up	2-3	26726A
	K36100A	Friction Module, [C-6] L1967-E76	1	
	K36100B	Friction Module, [C-6] L1976-Up	1	
	K36100HP	Friction Module, [C-6] (Hi-Performance Red) 1967-Up	1	26752HP
	K36100E	Friction Module, [E4OD] (With 1st Design Direct & Reverse Frictions) 1989-E97	1	
	K36100EHP	Friction Module, [E4OD] (Hi-Performance Red) 1989-E97	1	26752BHP
	K36100H	Friction Module, [E4OD / 4R100] (24 Teeth) (Reverse) & (64 Teeth Overdrive Frictions) L1997-99	1	
	K36100J	Friction Module, [4R100] 1/1998-2000	1	
	K36100K	Friction Module, [4R100] (60 Teeth Intermediate Friction) 2001-Up	1	
		STEEL CLUTCH		
120	36104	Steel, [E4OD / 4R100] (Overdrive Clutch) (.080") 1989-Up	2-3	EPTZ-7B442-A
124	36106	Steel, [E4OD / 4R100] (Intermediate Clutch) (.080") 1989-98	2-3	E9TZ-7B442-B
124	36415C	Steel, [4R100] (Intermediate Clutch) (.125") 1998-Up	3	
126	36305	Steel, [C-6 / E4OD / 4R100] (Forward & Direct Clutch) (.078") 1966-Up	8-9	E9TZ-7B442-D
126	36305K	Steel, [C-6 / E4OD / 4R100] (Forward & Direct Clutch) (.078") (Kolene)	8-9	
126	36305P	Steel, [C-6 / E4OD / 4R100] (Forward & Direct Clutch) (.059") (Thin)	AR	
126	36305A	Steel, [C-6] (Forward Clutch) (.081") (Waved) (26 Teeth) 1967-76	1	
126	36305X	Steel, [C-6 / E4OD / 4R100] (Forward & Direct) (.095") (Oversized)	AR	
130	36505	Steel, [C-6 / E4OD / 4R100] (Reverse Clutch) (.068") 1966-Up	4-6	E9TZ-7B442-E
130	36505K	Steel, [C-6 / E4OD / 4R100] (Reverse Clutch) (.068") (Kolene)	4-6	
130	36505X	Steel, [C-6 / E4OD / 4R100] (Reverse Clutch) (.081") (Oversized)	AR	
132	36102	Steel, [E4OD / 4R100] (Coast Clutch) (.080") (60 Teeth) 1989-99 (*For Cast Iron Drum)	2	E9TZ-7B442-C
132	36102A	Steel, [4R100] (Coast Clutch) (.079") (32 Teeth) 1998-Up (*For Stamped Steel Drum)	2-3	F81Z-7B442-AA
	K36110A	Steel Module, [C-6] 1966-Up	1	
	K36110AK	Steel Module, [C-6] (Hi-Performance Red) (Kolene) 1966-Up	1	
	K36110E	Steel Module, [E4OD / 4R100] (Cast Iron Coast Clutch Drum) 1989-99	1	
	K36110EK	Steel Module, [E4OD / 4R100] (Cast Iron Coast Clutch Drum) (Hi-Performance) (Kolene) 1989-99	1	
	K36110J	Steel Module, [E4OD / 4R100] (With Stamped Steel Coast Clutch Drum) 1/1998-Up	1	
		CLUTCH PRESSURE PLATES		
140	36415F	Pressure Plate, [E4OD] (Overdrive Clutch) (.490") (2 Clutch)	1	E9TZ-7B066-B

C-6/E4OD/4R100

140	36415G	Pressure Plate, [E4OD / 4R100] (Overdrive Clutch) (.320") (3 Clutch)	1	F3TZ-7B066-A
140	36415GS	Pressure Plate, [E4OD / 4R100] (Overdrive Clutch) (.192") (6 Teeth) (4 Clutch)	1	
144	36415H	Pressure Plate, [E4OD] (Intermediate Clutch) (Rear) (.580")	1	F1TZ-7B066-A
144	36415D	Pressure Plate, [E4OD] (Intermediate Clutch) (Rear) (.415")	1	E9TZ-7B066-D
144	36415J	Pressure Plate, [4R100] (Intermediate Clutch) (Rear) (.325")	1	
145	36415C	Pressure Plate, [E4OD / 4R100] (Intermediate Clutch) (Front) (.125") (*Also Used as Steel In 4R100)	1	E9TZ-7B066-C
146	36415A	Pressure Plate, [C-6 / E4OD / 4R100] (Forward & Direct Clutch) (Top) (Flat) (.340")	1-2	C6AZ-7B066-B
146	36415AS	Pressure Plate, [C-6 / E4OD] (Forward & Direct Clutch) (Top) (*Cut Down to Hold Extra Clutch)	1-2	
149	36415	Pressure Plate, [C-6 / E4OD / 4R100] (Forward Clutch) (Beveled) (Bottom)	1	C6AZ-7B066-A
150	36415B	Pressure Plate, [C-6] (Reverse Clutch) (.438")	1	
150	36415BS	Pressure Plate, [C-6 / E4OD / 4R100] (Reverse) (*Cut Down to Hold Extra Clutch)	1	
150	36141	Pressure Plate, [E4OD / 4R100] (Reverse Clutch) (.550")	1	E9TZ-7B066-A
152	36415E	Pressure Plate, [E4OD / 4R100] (Coast Clutch) (60 Teeth) (Cast Iron Drum)	1	E9TZ-7B066-E
152	36415J	Pressure Plate, [4R100] (Coast Clutch) (32 Teeth) (Stamped Steel Drum) 1998-Up	1	
		MODULATORS		
160	26830	Modulator, [C-6] (White Stripe) (Single Line) (Screw-In) 1966-72	1	C4AZ-7A377-B
160	36833	Modulator, [C-6] (Black Stripe) (Single Line) (Push-In) 1973-Up	1	D3TZ-7A377-A
160	36830D	Modulator, [C-6] (Green Stripe) (Single Line) (Push-In) 1977-Up	1	D7OZ-7A377-A
160	36833X	Modulator, [C-6] (Purple Stripe) (Single Line) (Push-In) 1975-Up	1	D5AZ-7A377-A
162	13266	Hose, [C-6] (Modulator) (Elbow) 1966-Up	1	C1AZ-7B087-E
163	36680	Valve, [C-6] (Under Modulator Pin)	1	D5AZ-7D080-A
163	36833-01K	Valve, [C-6] (Oversized Modulator System) **(*Requires 36833-TL)**	1	Sonnax
164	T162B	Pin Kit, [C-6] (Modulator) (10-Pieces)	1	D8AZ-7A380-A
		VALVE BODY KITS		
	K36908AS	Valve Body Kit, [C-6]	1	Superior
	K36908A	Shift Kit, [C-6] (Diesel & Gas) 1967-Up	1	Transgo
	K36908ES	Valve Body Kit, [E4OD / 4R100] 1989-Up	1	Superior
	K36908E	Shift Kit, [E4OD / 4R100] 1989-Up	1	Transgo
	67-1/2	Reprogramming Kit, [C-6] (*Gas Only) (Heavy Duty Towing & Competition) 1967-Up	1	Transgo
	E4OD-HD2	Reprogramming Kit, [E4OD] (Heavy Duty & Hi-Performance) (Gas & Diesel) 1989-Up	1	Transgo
	4R100-HD2	Reprogramming Kit, [E4OD / 4R100] (Heavy Duty & Hi-Performance) (*Towing *"Tugger"*, Downhill Hold Back Use Exhaust Brake) (Diesel & Gas Hop Up) (Tugger Kit) 1989-2004	1	Transgo
	67-3	Reprogramming Kit, [C-6] (*Gas Only) (Full Manual Control) (Competition Stick Shift) 1967-Up	1	Transgo
		OIL SEALING RINGS		
	K36901	Ring Kit, [C-6] (Metal) (7-Ring) 1966-Up	1	
	K36901T	Ring Kit, [C-6] (Teflon) (7-Ring) 1966-Up	1	
	K36901E	Ring Kit, [E4OD / 4R100] (4-Metal) (3-Teflon) (7-Ring) 1989-Up	1	
178	36403T	Ring, [E4OD / 4R100] (Stator) (Front) (Teflon)	1	
179	36210	Ring, [C-6 / E4OD / 4R100] (Direct Clutch) (Metal)	2	C6AZ-7D025-A
179	36402T	Ring, [E4OD / 4R100] (Coast Clutch) (Teflon)	2	
181	36401	Ring, [C-6 / E4OD / 4R100] (Forward Clutch) (Metal) 1966-Up	2	C6AZ-7D019-B
189	26645	Ring, [C-6] (Governor) (Metal) 1966-Up	3	C4AZ-7D011-A
		WASHERS & BEARINGS		
	K36907	Washer Kit, [C-6] (Pump) (*Selectives Only) (5-Metal) 1966-Up	1	
	K36907P	Washer Kit, [C-6] (With Plastic Selectives)	1	

	K36907A	Washer Kit, [C-6] (Without Selective) (10-Metal) 1966-Up	1	
	K36907E	Washer Kit, [E4OD] (With 4-Pinion Planets) (12-Total) (9-Metal) (3-Plastic) 1989-Up	1	
	K36907F	Washer Kit, [E4OD] (With 3-Pinion Planets) (14-Total) (11-Metal) (3-Plastic) 1989-Up	1	
	K36907G	Washer Kit, [4R100] (With 3 & 4-Pinion Planets) (11-Total) (8-Metal) (3-Plastic) 1998-Up	1	
	K36907B	Bearing Kit, [C-6] (3-Bearings) (Torrington)	1	
	K36907C	Bearing Kit, [E4OD] (Torrington)	1	
210	36409	Washer, [C-6] (Stator Support) (.057") (Metal) (#1)	1	C6AZ-7D014-A
210	36409P	Washer, [C-6] (Stator Support) (.057") (Plastic) (#1)	1	C6AZ-7D014-AP
210	36409A	Washer, [C-6] (Stator Support) (.074") (Metal) (#2)	1	C6AZ-7D014-B
210	36409AP	Washer, [C-6] (Stator Support) (.074") (Plastic) (#2)	1	C6AZ-7D014-BP
210	36409B	Washer, [C-6] (Stator Support) (.089") (Metal) (#3)	1	C6AZ-7D014-C
210	36409BP	Washer, [C-6] (Stator Support) (.089") (Plastic) (#3)	1	C6AZ-7D014-CP
210	36409C	Washer, [C-6] (Stator Support) (.104") (Metal) (#4)	1	C6AZ-7D014-D
210	36409CP	Washer, [C-6] (Stator Support) (.104") (Plastic) (#4)	1	C6AZ-7D014-DP
210	36409D	Washer, [C-6] (Stator Support) (.119") (Metal) (#5)	1	C6AZ-7D014-E
210	36409DP	Washer, [C-6] (Stator Support) (.119") (Plastic) (#5)	1	C6AZ-7D014-EP
210	36409E	Washer, [E4OD / 4R100] (Stator) (.055") (Plastic)	1	F1TZ-7D014-A
211	36445	Bearing, [E4OD / 4R100] (Stator to Overdrive Sun Gear)	1	F6TZ-7E486-AA
214	36446	Washer, [E4OD] (Overdrive Planet to Overdrive Sprag) (With 2-Inner Tabs) (Metal) 89-90	1	E9TZ-7L339-A
214	36446A	Washer, [E4OD] (Overdrive Planet to Overdrive Sprag) (With 2-Inner Tabs) (Plastic) 1991-98	1	F1TZ-7L339-A
214	36446B	Washer, [4R100] (Overdrive Planet to Overdrive Sprag) (Plastic) (No Tabs) (*With "V"-Notch) 1999-Up	1	F81Z-7L339-AA
217	96428	Bearing W/Races, [E4OD / 4R100] (Overdrive Planet to Hub)	1	F4TZ-7F240-A
223	96423	Bearing W/Races, [E4OD / 4R100] (Overdrive Hub to Center Support) 1989-Up	1	
224	R16	Ball Bearing, [E4OD / 4R100] (Presses In Center Support) (1.0"ID) (2.0"OD) (3.75")	1	Sonnax
224	96423-01	Ball Bearing, [E4OD / 4R100] (Presses In Center Support) (OE Type) (1.180"ID) (1.850"OD)	1	E6DZ-76178-A
225	36448	Washer, [E4OD / 4R100] (Center Support to Direct Drum) (Plastic)	1	E9TZ-7L326-A
226	56214	Bearing W/Races, [E4OD / 4R100] (Center Support to Forward Drum) (.140" Thick) (2.600"OD) (1.930"ID)	1	E1FZ-7F374-A
227	36405	Washer, [E4OD / 4R100] (Intermediate Drum to Sprag) (Metal)	1	F3TZ-7G401-A
229	36422	Washer, [C-6] (Direct Drum to Forward Drum)	1	C6AZ-7C096-A
229	36422E	Washer, [E4OD] (Direct Drum to Forward Drum) 1989-97	1	E9TZ-7C096-A
231	36421	Washer, [C-6 / E4OD / 4R100] (Forward Drum to Hub) (Metal)	1	
232	36431	Bearing, [C-6] (Sun Gear to Forward Drum) (42-Rollers) 1966-Up	1	C6AZ-7D234-A
232	K36431	Bearing W/Races, [C-6] (Forward Drum to Forward Planet) (3-Pieces) 1966-75 (*Also [C-6] Forward Planet to Sun Gear)	1	C6AZ-7D234-B
232	36431A	Bearing W/Races, [C-6 / E4OD / 4R100] (Forward Drum to Forward Planet) (1-Piece) (*Also [4R100] Forward Planet to Sun Gear)	1	E0AZ-7F231-A
235	36402	Washer, [E4OD] (Forward Hub to Forward Planet) (4-Tab) (*For 4 Gear Planet) 1989-96	3	E9TZ-7A166-A
235	36402A	Washer, [E4OD] (Forward Hub to Forward Planet) (3-Narrow Tabs) (*For 3 Gear Forward Planet)	3	F0TZ-7A166-C
235	36402B	Washer, [E4OD / 4R100] (Rear Planet) (3-Wide Tabs) (*For 3 or 6 Gear Rear Planet)	2	F0TZ-7A166-D
235	36428	Washer, [C-6] (Front & Rear Planet) (6-Tabs) (*For 3 Gear Planet)	2	C6AZ-7A166-A
235	36428A	Washer, [C-6] (Rear Planet) (4-Tabs) (*For 4 Gear Planet)	2	C6SZ-7A166-A
235	36447	Bearing W/Races, [E4OD / 4R100] (Forward Hub to Forward Planet) 1997-Up	1	F81Z-7A166-AA
	36428Z	Shim Kit, [C-6] (Goes Under #235) (.010") (10 Per Kit) (6-Slots)	1	Sonnax
	36428AZ	Shim Kit, [C-6] (Goes Under #235) (.010") (10 Per Kit) (4-Slots)	1	Sonnax
	36402Z	Shim Kit, [E4OD / 4R100] (Goes Under #235) (.010") (10 Per Kit)	1	Sonnax

	36432	Race, [C-6] (Sun Gear) (Front) 1966-77	1	C6AZ-7D236-A
238	K36431	Bearing W/Out Races, [C-6] (Forward Planet to Sun Gear) (3-Piece Type) (Stays In Planet)	1	C6AZ-7D234-B
238	36431A	Bearing W/Races, [C-6 / E4OD] (Forward Planet to Sun Gear) (1-Piece Type) (Stays In Planet)	1	E9TZ-7D234-A
	36433	Race, [C-6] (Sun Gear) (Rear) 1966-77	1	C6ZA-7D235-A
243	36416	Race, [C-6 / E4OD / 4R100] (Input Shell)	1	C6AZ-7D066-B
243	36414-01K	Shim, [C-6] (Sun Shell Saver) (*Fits Between Shell & Snap Ring)	1	Sonnax
254	36444A	Washer, [C-6] (Output Hub to Sprag Race) (3-Tang) 1970-76	1	
254	36444	Washer, [C-6] (Output Hub to Sprag Race) (2-Tang) 1966-69	1	C6AZ-7D422-B
254	36444E	Bearing W/Race, [C-6] (Output Hub to Sprag Race) (Open Face Bearing)	1	E7TZ-7D422-A
254	96423	Bearing W/Races, [C-6 / E4OD / 4R100] (Output Hub to Sprag Race) & (*Also [E4OD / 4R100] (Overdrive Hub to Center Support)	1-2	E6DZ-7G178-A
263	36437	Washer, [C-6 / E4OD] (Parking Gear to Case)	1	D3TZ-7B368-A
263	36437A	Bearing W/Races, [4R100] (Parking Gear to Case) 1998-Up	1	
286	36449	Washer, [C-6 / E4OD] (Sprag to Snap Ring)	1	3717682
		GASKETS & RUBBER COMPONENTS		
300	13233	Gasket, [C-6] (Bottom Pan)	1	C6AZ-7A191-B
300	36500	Gasket, [E4OD / 4R100] (Bottom Pan) (Cork) 1989-Up	1	E9TZ-7A191-A
300	36500G	Gasket, [E4OD / 4R100] (Bottom Pan) (Bonded Rubber) 1996-Up	1	F6TZ-7A191-A
	36502	Gasket, [4R100] (PTO Cover) 1998-Up	1	
305	13232	Gasket, [C-6] (Extension Housing)	1	C6AZ-7086-A
305	13232E	Gasket, [E4OD / 4R100] (Extension Housing)	1	E9TZ-7086-B
317	100129	Gasket, [C-6] (Adapter to Transfer Case) (203 Transfer Case)	1	
317	100129	Gasket, [C-6] (Adapter to Transfer Case) (205 Transfer Case)	1	
317	100129	Gasket, [E4OD] (Adapter to Transfer Case)	1	
307	13236	Gasket, [C-6] (Intermediate Servo Cover)	1	D4AZ-7D026-A
307	K36582R-SK	Seal Kit, [C-6] (R-Code Servo Cover) (Gasket & 5-O-Rings)	1	Sonnax
	36268	Gasket, [E4OD / 4R100] (Pump Bolt Washer)	9	E9TZ-7G379-A
310	13851	Gasket, [C-6] (Pump)	1	E0AZ-7A136-B
310	13225E	Gasket, [E4OD / 4R100] (Pump)	1	E9TZ-7A136-A
311	13226	O-Ring, [C-6] (Pump)	1	C6AZ-7A248-B
311	13226E	O-Ring, [E4OD / 4R100] (Pump)	1	E9TZ-7A248-A
	36743G	Gasket, [E4OD] (Center Support Plate) (5 Per Kit)	1	Sonnax
320	13334F	Gasket, [E4OD] (Spacer Plate to Case) (Upper) (No Stripe) 1989 Only*	1	E9TZ-7C155-B
320	13334H	Gasket, [E4OD] (Spacer Plate to Case) (Upper) (Yellow Stripe) 1990-95	1	F1TZ-7C155-A
320	13334K	Gasket, [E4OD] (Spacer Plate to Case) (Upper) (Green Stripe) 1996-97	1	F6TZ-7C155-A
320	13334L	Gasket, [E4OD / 4R100] (Spacer Plate to Case) (Upper) (White Stripe) 1998-05	1	
321	13334	Gasket, [C-6] (Valve Body) (Lower) 1967-Up	1	D6AZ-7D100-A
321	13334A	Gasket, [C-6] (Valve Body) (Lower) 1966	1	
321	13334E	Gasket, [E4OD] (Valve Body to Spacer Plate) (Lower) (No Stripe) 1989	1	E9TZ-7D100-B
321	13334G	Gasket, [E4OD] (Valve Body to Spacer Plate) (Lower) (Yellow Stripe) 1990-95	1	F0TZ-7D100-A
321	13334J	Gasket, [E4OD] (Valve Body to Spacer Plate) (Lower) (Lt. Green Stripe) 1996-97	1	
321	13334M	Gasket, [E4OD / 4R100] (Valve Body to Spacer Plate) (Lower) (Blue Stripe) 1998-04	1	F6TZ-7D100-Z
326	13235	Gasket, [C-6] (Oil Filter)	1	C6AZ-7E062-A
330	36551	Lip Seal, [E4OD / 4R100] (Intermediate & Overdrive Clutch) (Inner) (*Also [E4OD] (Overdrive Clutch) (Inner) (Aluminum Piston) 1989-94	2	E9TZ-7F252-A
331	36557	Lip Seal, [E4OD] (Overdrive Clutch) (Outer) (Aluminum Piston) 1989-95	1	E9TZ-7A548-A
332	36550	Lip Seal, [E4OD / 4R100] (Intermediate Clutch) (Outer) 1989-Up	1	E9TZ-7F224-A
334	36532	O-Ring, [E4OD / 4R100] (Forward Clutch) (Inner)	1	E9TZ-7A548-F

335	13237A	Lip Seal, [C-6 / E4OD / 4R100] (Forward Clutch) (Outer) 1976-Up	1	D6AZ-7A548-A
336	13280	Lathe Cut Seal, [C-6] (Direct Clutch) (Inner) L1976-Up	1	C8AZ-7C099-A
336	36559	Lip Seal, [E4OD / 4R100] (Direct Clutch) (Inner) 1989-04	1	
337	13228	Lathe Cut Seal, [C-6] (Direct Clutch) (Outer)	1	C8AZ-7A548-C
337	36558	Lip Seal, [E4OD / 4R100] (Direct Clutch) (Outer) 1989-04	1	
338	13231	Lathe Cut Seal, [C-6 / E4OD] (Reverse Clutch) (Inner) 1968-95	1	C7AZ-7D404-A
338	13231A	Lip Seal, [E4OD / 4R100] (Reverse Clutch) (Inner) 1996-Up	1	F6TZ-7D404-A
339	13229	Lathe Cut Seal, [E4OD / 4R100] (Reverse Clutch) (Outer) 1966-65	1	C8AZ-7D403-A
339	13229A	Lip Seal, [E4OD / 4R100] (Reverse Clutch) (Outer) 1996-Up	1	F6TZ-7F403-A
340	36554	Lip Seal, [E4OD / 4R100] (Coast Clutch) (Inner) (Cast Iron Drum)	1	E9TZ-7A548-C
341	36556	Lip Seal, [E4OD / 4R100] (Coast Clutch) (Outer) (Cast Iron Drum)	1	E9TZ-7A548-B
347	3291	O-Ring, [E4OD / 4R100] (Solenoid Pack Connector) 1989-Up	1	87034-S94
349	3499	O-Ring, [C-6] (Throttle Shaft & Modulator)	1	386078-S
349	3499A	Seal, [C-6] (Throttle Shaft) (With 4-Lobes)	1	
361	13929	O-Ring, [C-6] (Intermediate Servo Piston) (Small) (1.700”OD) (Round) 1967-69	1	
361	13243	O-Ring, [C-6] (Intermediate Servo Piston) (Small) (1.760”OD) (Round) 1966-68	1	
361	13242A	O-Ring, [C-6] (Intermediate Servo Piston) (Small) (1.785”OD) (Round) 1966-Up	1	
361	3366	O-Ring, [C-6] (Intermediate Servo Piston) (Small) (2.030”OD) (Round) 1967-72	1	
361	13247	O-Ring, [C-6] (Intermediate Servo Piston) (Small) (2.060”OD) (Square) 1966-Up	1	
361	3466	O-Ring, [C-6] (Intermediate Servo Piston) (Large) (2.690”OD) (Round) 1966-74	1	
361	13240	O-Ring, [C-6] (Intermediate Servo Piston) (Large) (2.725”OD) (Square) 1966-74	1	
361	13238	O-Ring, [C-6] (Intermediate Servo Piston) (Large) (2.782”OD) (Round) 1966-68	1	
361	3476	O-Ring, [C-6] (Intermediate Servo Piston) (Large) (3.151”OD) (Round) 1968-71	1	
362	13237	O-Ring, [C-6] (Intermediate Servo Cover)	1	
	3665	O-Ring, [C-6] (Cooler Line)	1	380892-S94
		TECHNICAL MANUALS		
	TMC6	Tech Manual, [C-6]	1	ATSG
	TME40D	Tech Manual, [E4OD]	1	ATSG
	TM4R100	Tech Manual, [4R100] (Ford Trucks) 1999-Up	1	ATSG
	TM4R100UD	Tech Manual, [4R100] (Update Hand Book)	1	ATSG
	TME40DUD	Tech Manual, [E4OD] (Update)	1	ATSG
		ELECTRICAL COMPONENTS		
410	36991	Switch, [C-6] (Neutral Safety) 1967-77	1	E2DZ-7A242-A
410	36991A	Switch, [C-6] (Neutral Safety) 1978-79 (Bronco 1978-80)	1	
410	36991B	Switch, [C-6] (Neutral Safety) 1983-86	1	
410	36991C	Switch, [C-6] (Neutral Safety) 1987-89	1	
410	36991D	Switch, [C-6] (Neutral Safety) 1990-97	1	
410	36955	Switch, [E4OD) (Manual Lever Position Switch) (*Update Kit 8-Pin Analog) 1989-Up	1	F5TZ-7A247-A
410	36955A	Switch, [E4OD / 4R100] (Manual Lever Position Switch) (Cast # F7) (12-Pin Digital) **(*12-Pin Will Work For 11-Pin)** 1997-04	1	F7TZ-7F239-AA
410	36955WH	Repair Harness, [E40OD] (Manual Lever Position Switch) (8-Pin) (*Fits 36955 MLPS)	1	
410	36955AWH	Repair Harness, [E4OD / 4R100] (Manual Lever Position Switch) (12-Pin) (Digital) (*Fits 36955A MLPS) 1997-Up	1	
420	36949	Solenoid Pack, [E4OD] (9-Pin) (.100” Thick) (Plastic Connector) 1989-94	1	E9TZ-7G391-A
420	R36949	Rebuilt Solenoid Pack, [E4OD] 1989-94	1	
420	36949A	Solenoid Pack, [E4OD / 4R100] (Non-PWM Units) 1995-Up	1	F81Z-7G391-BA
420	R36949A	Rebuilt Solenoid Pack, [E4OD / 4R100] (Non-PWM Units) 1995-Up	1	

C-6/E4OD/4R100

420	36949B	Solenoid Pack, [E4OD / 4R100] (PWM Units) 1998-Up	1	F81Z-7G391-CB
420	R36949B	Rebuilt Solenoid Pack, [E4OD / 4R100] (PWM Units) 1998-Up	1	
438	36951	Speed Sensor, [E40D] (VSS) (2-Pin Connector) (*Uses a Cable) 1989-91	1	
438	36951A	Speed Sensor, [E40D] (VSS) (2-Pin Connector) (*Uses No Cable) 1992-96	1	
438	36951B	Speed Sensor, [E40D] (VSS) (2-Pin Connector) (*Uses No Cable) 1997-98	1	
438	36957A	Sensor, [4R100] (Turbine Shaft Speed) (Non-PTO) (*Also [4R100] Output Speed, All) 1998-04	1	F817-7M101-AA
438	36957	Sensor, [4R100] (Turbine Shaft Speed) (PTO Models) 1998-00	1	
438	36951C	Speed Sensor, [E40D] (VSS) (Mounts in Differential Housing)	1	
	96968	Repair Harness, [E40D] (Speed Sensor) 1989-Up	1	
	36995	Repair Harness, [E4OD] (Plugs into Solenoid) 1989-94	1	
	36995A	Repair Harness, [E4OD / 4R100] (Plugs into Solenoid) 1995-Up	1	
	36980	Controller, [E4OD] (Coast Clutch) 1989-94	1	
	36980A	Controller, [E4OD] (Coast Clutch) 1995-98	1	
	36790	Interceptor, [E4OD] (Adjustable Electron Modulator) 1989-94 (*Allows TCC & Line Press Fine Tuning)	1	INT36A
	36790A	Interceptor, [E4OD] (Adjustable Electron Modulator) 1995-Up	1	INT36B
	LUE4OD	Adaptor, [E4OD] 1988-92 (***For the Rostra LU1**)	1	
	LU-1	Lock-up Delay Module, (*For Vehicle With Speed Sensor)	1	Rostra
		MISC. COMPONENTS		
	30126	Union, (5/16”)	1	
062	36861	Orifice Cup Plug, [E4OD / 4R100] (Output Shaft) (Front) (*Replaces Bushing)	1	39150-S
487	26711	Grommet, [C-6] (Linkage) (5/8”ID)	1	D4AZ-7341-A
487	26710	Grommet, [C-6] (Linkage) (5/16”ID)	1	
487	26713	Grommet, [C-6] (Passing Gear) (Narrow Groove)	1	E0AZ-7F330-A
487	30131	E-Clip, [C-6] (Linkage)	1	
495	36423T	Pick Up Tube, [C-6] (4x4) (Filter)	1	D3TZ-7A102-C
	36999	Tube, [E40D / 4R100] (Fluid Inlet) (Presses into Case) 1989-Up	1	XC3Z-7A160AA
		HARD PARTS		
500	36424	Pump, [C-6] (Gas) 1967-Up	1	C8AZ-7A103-B
500	36424E	Pump, [E4OD] (Cast # RFE9 or RFF1) (11-Bolt) 1989-94	1	F5TZ-7A103-A
500	36424EF	Pump, [E4OD] (Cast # RFF5) (11-Bolt) (9 Teeth Inner Gear) 1995-98 (*Retros 1989)	1	F81Z-7A103-BA
500	36424F	Pump, [E4OD / 4R100] (Cast # RF-F8) (12-Bolt) (Non-PWM) (Cast Iron Coast Drum) 1998-99	1	
500	36424G	Pump, [4R100] (Cast # RFF8) (12-Bolt) (Stamped Steel Coast Drum) 1998-Up	1	XC3Z-7A103-EA
500	36424H	Pump, [4R100] (Cast # RFF8) (12-Bolt) (PWM) (Stamped Steel Coast Drum) 1998-Up	1	F81Z-7A103-CA
500	36424J	Pump, [4R100] (12-Bolt) (PWM) (PTO Option) 1998-Up	1	
		PUMP COMPONENTS		
507	36908S-S	Shudder Spring Kit, [E4OD] (In Plug)	1	SGSF-E4OD
507	36424-08K	Valve Assembly, [4R100] (TCC Control Boost Valve & Sleeve) (*For PWM Units Only)	1	Sonnax
507	4R100-LU	Valve Assembly, [E4OD / 4R100] (TCC Lock-Up Kit On-Off) (Valve, Spring, Bushing) (Give a Short Crisp On/Off Lock-Up) **(*Used With E4OD-HD2D & 4R100-HD2)**	1	Transgo
507	36912	Drain Back Valve, [E4OD /4R100] (With Spring) (In Stator)	1	E9TZ-7H132-B
507	K36462	Pump Kit, [E4OD] (*Code 62 Fix) (Bushing, Drain Back Valve & Plugs)	1	
507	36424-04K	Valve, [E4OD] (Line to Lube Pressure Regulator) (With Check Valve)	1	Sonnax
507	36424-03K	Valve Assembly, [E4OD / 4R100] (Pressure Regulator Boost) (*Factory Style) (No O-Rings)	1	Sonnax

507	36424-01K	Valve Assembly, [E4OD / 4R100] (Pressure Regulator Boost) (*O-Ring Style) (With O-Rings)	1	Sonnax
507	K024	Valve Assembly, [E4OD / 4R100] (Pressure Regulator Boost) (Valve & Sleeve) (Steel)	1	Superior
		HARD PARTS (Continued)		
510	36427	Pump Body, [C-6] 1966-Up	1	
510	36916E	Pump Body, [E4OD] (Cast # RFE9) (11-Bolt) (3.950"OD Outer Gear) (10 Teeth Inner Gear) 1989-94	1	
510	36916F	Pump Body, [E4OD] (Cast # RFF5) (11-Bolt) (4.083"OD Outer Gear) (9 Teeth Inner Gear) 1995-98	1	
510	36916G	Pump Body, [E4OD / 4R100] (Cast # RF-F8) (12-Bolt) 1998-Up	1	
520	36425	Stator, [C-6] L1967-Up	1	
520	36425E	Stator, [E4OD] (Cast # RFEP or RFF1) 1989-94	1	
520	36425F	Stator, [E4OD] (Cast # RFF5) (*Bushing Type) 1995-97	1	
520	36425F	Stator, [E4OD / 4R100] (Cast # RF-F8) (12-Bolts) (Cast Iron Coast Clutch Drum) 98-99	1	
520	36425G	Stator, [4R100] (PWM) (Gas & Diesel) (12-Bolt) (Stamped Steel Coast Drum) 98-Up	1	
520	36425H	Stator, [4R100] (PWM) (Gas & Diesel) (12-Bolt) (PTO Option) 1998-Up	1	
530	K36201	Pump Gears, [C-6]	1	
530	K36201X	Pump Gears, [C-6] (Oversized)	1	
530	K36438	Pump Gears, [E4OD] (10 Teeth Inner Gear) (3.950"OD Outer Gear) 1989-94	1	
530	K36438A	Pump Gears, [E4OD / 4R100] (9 Teeth Inner Gear) (4.083"OD Outer Gear) 1995-Up	1	
530	K36438AX	Pump Gears, [E4OD / 4R100] (9 Teeth Inner Gear) (Oversize) 1995-Up	1	
545	36744	Cylinder, [E4OD] (Intermediate / Overdrive Clutch) (*For Aluminum Pistons) 1989-95	1	
545	36744A	Cylinder, [E4OD / 4R100] (Intermediate / Overdrive Clutch) (*Uses Bonded Overdrive Piston) 1996-Up	1	F6TZ-7G384-AA
554	36436	Drum, [C-6] (Forward Clutch) (31-Splines, 4 Clutch) 1966-E71	1	E9TZ-7A548-C
554	36436A	Drum, [C-6] (Forward Clutch) (31-Splines, 5 Clutch) 1966-E71	1	
554	36436B	Drum, [C-6] (Forward Clutch) (31-Splines, 3 Clutch) 1966-E71	1	
554	36436C	Drum, [C-6] (Forward Clutch) (30-Splines, 5 Clutch) 1971-E76	1	
554	36436E	Drum, [C-6] (Forward Clutch) (30-Splines, 4 Clutch) L1976-Up	1	
554	36436G	Drum, [C-6] (Forward Clutch) (30-Splines, 4 Clutch) L1971-E76	1	
554	36436F	Drum, [C-6] (Forward Clutch) (30-Splines, 3 Clutch) 1971-E76	1	
554	36436D	Drum, [C-6] (Forward Clutch) (30-Splines, 5 Clutch) L1976-Up	1	
554	36436H	Drum, [E4OD / 4R100] (Forward Clutch) (4 Clutch) (Splines Full Length of Drum Bore) 1989-99	1	
554	36436J	Drum, [E4OD / 4R100] (Forward Clutch) (4 Clutch) (Splines 1/2 Length of Drum Bore) 2000-Up (*Retros to 89)	1	F81Z-7A360-AA
555	36411	Drum, [C-6] (Direct Clutch) (4 Clutch) 1966-Up	1	
555	36411A	Drum, [C-6] (Direct Clutch) (3 Clutch) 1966-Up	1	
555	36411B	Drum, [C-6] (Direct Clutch) (5 Clutch) (3 Clutch With New Snap Ring Groove Cut For 5 Clutch) 1966-Up	1	
555	36411EA	Drum, [E4OD] (Direct Clutch) (3 Clutch) (Without Sprag) (2-Feed Holes) 1989-94	1	E9TZ-7D044-A
555	36411HA	Drum, [E4OD] (Direct Clutch) (3 Clutch) (Without Sprag) (1-Feed Hole) (*Uses Washer #229) 1995-97	1	
555	36411FA	Drum, [E4OD / 4R100] (Direct Clutch) (3 Clutch) (Without Sprag) (1-Feed Hole) (*Uses Washer #229) 1998-Up	1	
555	36411E	Drum, [E4OD / 4R100] (Direct Clutch) (4 Clutch) (Without Sprag) (2-Feed Holes) 89-94	1	

555	K36411G	Drum Kit, [4R100] (Direct Clutch) (4 Clutch) (With Piston & Washer #229) (***Use This Kit to Replace Diode Type Drum) (*If Kit Does Not Have 50 Teeth Intermediate Frictions Use 3-36105A)**	1	
555	36411H	Drum, [E4OD] (Direct Clutch) (4 Clutch) (Without Sprag) (1-Feed Hole) (*Uses Washer #229) 1995-97	1	
555	36411K	Drum, [E4OD / 4R100] (Direct Clutch) (4 Clutch) (Without Sprag) (1-Feed Hole) (*Uses Washer #229) 2000-Up	1	
555	36411F	Drum, [E4OD] (Direct Clutch) (5 Clutch) (Without Sprag) (1-Feed Hole) (*Uses Washer #229) 1/1998-99	1	
555	36411G	Drum, [E4OD / 4R100] (Direct Clutch) (5 Clutch) (Without Sprag) (1-Feed Hole) (*Uses Washer #229) 1998-Up	1	
559	36740	Drum, [E4OD] (Coast Clutch) (Without Electronic Pick-Up) (Cast Iron) (*Groove For Inner Lip Seal)	1	E9TZ-7A548-E
559	36740A	Drum, [4R100] (Coast Clutch) (With Sun Gear) (Stamped Steel) (Without PTO)	1	1C3Z-7G387-AA
559	36740B	Drum, [4R100] (Coast Clutch) (With Sun Gear) (Stamped Steel) (With PTO)	1	
576	36417	Clutch Hub, [C-6 / E4OD] (Reverse Clutch) (12-Lugs For Planet) (Ring Groove For Sprag) 1966-92	1	F3TZ-7D067-A
576	36417E	Clutch Hub, [E4OD] (Reverse Clutch) (12-Lugs For Planet) (No Ring Groove For Plastic Sprag) 1993-97	1	F3TZ-7B067-A
576	36417G	Clutch Hub, [E4OD / 4R100] (Reverse Clutch) (24-Lugs For Planet) (Stamped Steel) 1998-Up	1	F7TZ-7B067-AC
580	36742	Planet, [E4OD] (Overdrive) (3 Gear) (Aluminum) (1-7/8" Long Hub) 1989-93	1	
580	36742B	Planet, [E4OD] (Overdrive) (3 Gear) (Aluminum) (1-7/16" Long Hub) 1994-98	1	
580	36742E	Planet, [E4OD / 4R100] (Overdrive) (3 Gear) (Steel) (1-7/16" Long Hub) 1999-Up	1	F5TZ-7B446-CA
580	36742A	Planet, [E4OD] (Overdrive) (4 Gear) (Aluminum) (1-7/16" Long Hub) 1994-Up	1	F2TZ-7B446-A
580	36742C	Planet, [E4OD] (Overdrive) (4 Gear) (Aluminum) (1-7/8" Long Hub) 1989-93	1	
580	36742D	Planet, [E4OD] (Overdrive) (4 Gear) (Steel) (1-7/16" Hub) (*Uses Washer #214 With Inner Tabs) 1994-Up	1	F5TZ-7B446-A
580	K36742	Planet Kit, [E4OD] (Overdrive) (4 Gear) (Steel) (Input Shaft) 1994-Up (*Kit Retros to 1989)	1	F4TZ-7B446-B
580	36742DA	Planet, [E4OD] (Overdrive) (4 Gear) (Steel) (1-7/8" Long Hub) 1989-93	1	
582	36440	Planet, [C-6] (Forward) (3 Gear) (Aluminum) 1966-E76	1	
582	36440-01	Sleeve, [C-6 / E4OD / 4R100] (Forward Planet Repair)	1	Sonnax
582	36440A	Planet, [C-6] (Forward) (3 Gear) (Aluminum) L1976-Up	1	
582	36440E	Planet, [E4OD] (Forward) (4 Gear) (Aluminum) (Washer Type) 1989-96 (*Can Use 36440F With 36418F Hub)	1	E9TZ-7A398-A
582	36440F	Planet, [E4OD / 4R100] (Forward) (4 Gear) (Aluminum) (Bearing Type) 1997-Up (*Retros With K36418F)	1	F7TZ-7A398-BA
582	36440EA	Planet, [E4OD] (Forward) (3 Gear) (Aluminum) (Washer Type) 1989-96	1	
582	36440EB	Planet, [E4OD / 4R100] (Forward) (3 Gear) (Aluminum) (Bearing Type) 1997-Up	1	
582	36440G	Planet, [E4OD / 4R100] (Forward) (6 Gear) (Steel) (Bearing Type) 1997-Up (*Retros With K36418F)	1	F81Z-7A398-CA
	K36440G	Planet Kit, [E4OD] (Forward) (6 Gear) (With Hub & Bearing) 1989-Up	1	
584	36408	Planet, [C-6] (Rear) (3 Gear) (Aluminum) 1966-Up	1	
584	36408A	Planet, [C-6] (Rear) (4 Gear) (Aluminum) 1966-Up	1	
584	36408E	Planet, [E4OD] (Rear) (3 Gear) (Aluminum) (12 Lug Hub) 1989-97	1	
584	36408EA	Planet, [E4OD] (Rear) (4 Gear) (Aluminum) (12-Lug Hub) 1989-97	1	F2TZ-7D006-A
584	36408FA	Planet, [E4OD / 4R100] (Rear) (3 Gear) (Aluminum) (24-Lug Hub) 1998-Up	1	F7TZ-7D006-AA
584	36408F	Planet, [E4OD / 4R100] (Rear) (4 Gear) (Aluminum) (24-Lug Hub) 1998-Up	1	F7TZ-7D006-BA
584	36408G	Planet, [E4OD / 4R100] (Rear) (6 Gear) (Steel) (24-Lug Hub) 1998-Up (*Retros With 36417G)	1	F8TZ-7D006-AA
590	36967	Ring Gear, [E4OD] (Overdrive Planet) (Cast Iron Coast Drum) 1989-97	1	E9TZ-7A153-A

590	36967A	Ring Gear, [4R100] (Overdrive Planet) (Stamped Steel Coast Drum) 1998-Up	1	F81Z-7A153-AA
592	36439A	Ring Gear, [C-6] (Forward Planet) L1967-E76	1	
592	36439B	Ring Gear, [C-6] (Forward Planet) L1976-Up	1	E9TZ-7D392-A
592	36439E	Ring Gear, [E4OD / 4R100] (Forward Planet) 1989-Up	1	F81Z-7D392-AB
592	36439F	Ring Gear, [E4OD / 4R100] (Forward Planet) 1997-Up	1	
594	36426	Ring Gear, [C-6] (Rear Planet)	1	
594	36426E	Ring Gear, [E4OD / 4R100] (Rear Planet) 1989-Up	1	E9TZ-7A153-B
602	36418	Hub, [C-6] (Forward Planet Ring Gear) 1966-E76	1	
602	36418A	Hub, [C-6] (Forward Planet Ring Gear) L1976-Up	1	
602	K36418F	Hub Kit, [E4OD / 4R100] (Forward Planet Ring Gear Hub and Bearing) 1997-Up	1	
602	36418E	Hub, [E4OD] (Forward Planet Ring Gear) (*Washer Type) 1989-96	1	
602	36418F	Hub, [E4OD / 4R100] (Forward Planet Ring Gear) (*Bearing Type) 1997-Up	1	F7TZ-7B067-AB
604	36427A	Hub, [C-6] (Output) (2-Tang) (*Washer Type) (Long Splines) 1966-E67	1	
604	36427B	Hub, [C-6] (Output) (2-Tang) (*Washer Type) (Short Splines) 1968-77	1	
604	36427C	Hub, [C-6] (Output) (3-Tang) (*Washer Type) L1978-Up	1	
604	36427E	Hub, [C-6 / E4OD / 4R100] (Output) (*Bearing Type) 1988-Up	1	F81Z-7D164-AA
610	36965A	Sun Gear, [E4OD / 4R100] (Overdrive) (*Used With Cast Iron Drum) 1989-98	1	E9TZ-7D063-B
610	36965	Sun Gear, [E4OD / 4R100] (Overdrive) (Stamp Steel Drum) 1998-Up (Presses on Coast Drum)	1	F81Z-7D063-A
612	36413	Sun Gear, [C-6] (Forward) 1966-Up	1	
612	36413E	Sun Gear, [E4OD / 4R100] (Forward) 1989-Up	1	E9TZ-7D063-A
622	36414	Shell, [C-6] (Input) 1966-Up	1	
622	36414E	Shell, [E4OD / 4R100] (Input) (*Retro Fits Early) 1998-Up	1	YC3Z-7D064-AA
622	36414F	Shell, [E4OD / 4R100] (Input) (*Retro Fits Early) 1998-Up (Hardened)	1	YC3Z-7D064-BA
630	36743	Center Support, [E4OD / 4R100] (*Aluminum Plate Only) 1989-Up	1	E9TZ-7A130-B
636	36743HA	Support, [E4OD] (Direct Drum) (Steel Half) (*Bushing Type)	1	
636	36743H	Support, [E4OD] (Direct Drum) (Steel Half) (*Bearing Type)	1	
636	K36743F	Support Kit, [E4OD] (*Update Kit) (With Center Support) 1989-Up (Includes: 636B, 675, 484E, 630, 223, 224)	1	F4TZ-7A130-B
636	K36743	Center Support Kit, [E4OD / 4R100] (*Update Kit) (Without Center Support) (Center Hub, Bearing, Plug & Center Shaft) 1989-Up	1	
		SPRAGS & ONE WAY CLUTCHES		
640	K36961A	Sprag Assembly, [E4OD] (*Update) (Overdrive) (Includes: Overdrive Sprag, Cam & Race) 1989-99	1	F5TZ-7A089-A
642	36962F	Mechanical Diode, [4R100] (Intermediate) (16-Inner Lugs) 2000-01	1	
650	36961	Sprag, [E4OD] (Overdrive) (34-Elements) (Metal Cage) 1989-94	1	8623056
650	36961B	Sprag, [E4OD] (Overdrive) (12-Rollers) (Plastic Cage) (4.080"OD) 1995-99 (*Can Use 96724A)	1	7471019
650	36961C	Sprag, [4R100] (Overdrive) (12-Rollers) (Plastic Cage) (3.313"OD) 1998-Up	1	7471036
652	36962	Sprag, [E4OD / 4R100] (Intermediate) (34-Lugs) 1989-Up	1	
642	K36962A	Sprag W/Outer Race, [E4OD / 4R100] (Intermediate) (34-Lugs) 1989-Up	1	
652	36962HD	Sprag, [E4OD / 4R100] (Intermediate) (45-Lugs) (Heavy Duty) 1989-Up	1	
654	K36960	Sprag, [C-6 / E4OD] (Rear) (Spring & Rollers) (With Brass Washer) 1966-92	1	D0AZ-7A089-A
654	K36960A	Sprag, [C-6 / E4OD] (Rear) (Spring & Rollers) (Without Brass Washer) 1966-92	1	
654	36960BWC	Cage And Springs, [C-6 / E4OD] (Rear Sprag) (No Rollers) 1966-92	1	
654	36960B	Sprag, [C-6 / E4OD] (Rear) (16-Rollers) (With Plastic Cage) 1989-4/97	1	F3TZ-7A089-A
654	36960C	Sprag, [E4OD / 4R100] (Rear) (17-Rollers) (Plastic Cage) 5/1997-Up	1	F7TZ-7A089-AA
		HARD PARTS (Continued)		

C-6/E4OD/4R100

660	36840	Inner Race, [E4OD] (Overdrive Sprag) (*For Lug Type Sprag) 1989-Up	1	
661	36839	Outer Race, [E4OD] (Overdrive Sprag) (4.015"ID) (*For Cast Iron Drum) 1989-94	1	
661	36839B	Outer Race, [E4OD] (Overdrive Sprag) (4.090"ID) (*For Cast Iron Drum) 1995-Up	1	
661	36839A	Outer Race, [E4OD] (Overdrive Sprag) (3.313"ID) (*For Stamped Steel Drum) 1998-Up	1	F81Z-7G389-AA
663	36841	Outer Race, [E4OD / 4R100] (Intermediate Sprag) (*Lug Type) 1989-Up	1	
664	36429	Inner Race, [C-6] (Rear Sprag) (1.089" Thick) (Without Lube Hole) 1966-69	1	
664	36429A	Inner Race, [C-6] (Rear Sprag) (1.089" Thick) (With Lube Oil) 1970-87	1	
664	36429H	Inner Race, [C-6] (Rear Sprag) (1.043" Thick) (*Use With Open Face Bearing) 1988	1	
664	36429E	Inner Race, [C-6 / E4OD] (Rear Sprag) (1.013" Thick) (3.198"OD) 1989-97	1	E9TZ-7D171-AA
664	K36429E	Inner Race Kit, [C-6 / E4OD] (Rear Sprag) (1.013" Thick) (3.198"OD) (*OE Type Bearing) 1989-97	1	
664	36429F	Inner Race, [E4OD / 4R100] (Rear Sprag) (3.398"OD) 1998-Up (*Fits 17-Roller Sprag)	1	F7TZ-7D171-AA
670	36410	Input Shaft, [C-6] (31-Spline Converter End) (31-Spline Drum End) 1966-E71	1	
670	36410A	Input Shaft, [C-6] (31-Spline Converter End) (30-Spline Drum End) L1971-Up	1	
670	36410E	Input Shaft, [E4OD] (14-1/8" Long)	1	E9TZ-7017-A
670	36410F	Input Shaft, [E4OD / 4R100] (13-5/8" Long) 1995-Up **(*Included In K36742 Overdrive Planet Kit)**	1	F81Z-7017-EA
675	36969	Shaft, [E4OD] (Overdrive) (With Pilot) (*For Bushing Type Output Shaft)	1	E9TZ-7A658-A
675	36969A	Shaft, [E4OD / 4R100] (Overdrive) (No Pilot) (*Cup Plug Type Shaft) 1995-Up **(*Included In K36743)**	1	F81Z-7A658-AA
678	36655AA	Output Shaft, [C-6] (2WD) (17-3/8" Long) (*Bolt-on Yoke Type)	1	
678	36655	Output Shaft, [C-6] (2WD) (23" Long) (6 Teeth Speed-O Gear)	1	
678	36655A	Output Shaft, [C-6] (2WD) (23" Long) (7 Teeth Speed-O Gear)	1	
678	36655AB	Output Shaft, [C-6] (2WD) (23" Long) (8 Teeth Speed-O Gear)	1	
678	36655AC	Output Shaft, [C-6] (2WD) (23" Long) (9 Teeth Speed-O Gear)	1	
678	36655B	Output Shaft, [C-6] (2WD) (26-3/4" Long) (6 Teeth Speed-O Gear)	1	
678	36655BC	Output Shaft, [C-6] (2WD) (26-3/4" Long) (7 Teeth Speed-O Gear)	1	
678	36655BD	Output Shaft, [C-6] (2WD) (26-3/4" Long) (8 Teeth Speed-O Gear)	1	
678	36655BE	Output Shaft, [C-6] (2WD) (26-3/4" Long) (9 Teeth Speed-O Gear)	1	
678	36655C	Output Shaft, [C-6] (4x4) (15-3/8" Long)	1	
678	36655D	Output Shaft, [C-6] (4x4) (18-1/2" Long)	1	
678	36655J	Output Shaft, [E4OD] (4x4) (14-3/8" Long) (With Bushing)	1	
678	36655K	Output Shaft, [E4OD] (4x4) (14-3/8" Long) (With Cup Plug)	1	
678	36655M	Output Shaft, [4R100] (4x4) (14-3/8" Long) (With Cup Plug) **(*Uses a Rotor)** 1997-Up	1	
678	36655N	Output Shaft, [E4OD] (4x4) (15-3/4" Long) (With Bushing)	1	
678	36655NA	Output Shaft, [E4OD] (4x4) (15-3/4" Long) (With Bearing)	1	
678	36655NB	Output Shaft, [E4OD] (4x4) (15-1/2" Long) (With Cup Plug) 1994	1	
678	36655O	Output Shaft, [E4OD] (4x4) (18-1/2" Long) (With Bearing)	1	
678	36655OA	Output Shaft, [E4OD] (4x4) (18-1/2" Long) (With Cup Plug) 1994-Up	1	
678	36655OB	Output Shaft, [4R100] (4x4) (18-1/2" Long) (With Cup Plug) **(*Uses a Rotor)**	1	
678	36655EB	Output Shaft, [E4OD] (2WD) (20" Long) (With Bushing) (No Speed-O Gear)	1	
678	36655EC	Output Shaft, [E4OD / 4R100] (2WD) (20" Long) (With Cup Plug) (No Speed-O Gear)	1	
678	36655E	Output Shaft, [E4OD] (2WD) (20" Long) (With Bushing) (7 Teeth Speed-O Gear)	1	
678	36655F	Output Shaft, [E4OD] (2WD) (20" Long) (With Cup Plug) (7 Teeth Speed-O Gear)	1	
678	36655L	Output Shaft, [4R100] (2WD) (20" Long) (With Cup Plug) **(*Uses a Rotor)**	1	
678	36655EA	Output Shaft, [E4OD] (2WD) (20" Long) (With Bushing) (8 Teeth Speed-O Gear)	1	

678	36655G	Output Shaft, [E4OD] (2WD) (20" Long) (With Cup Plug) (8 Teeth Speed-O Gear)	1	
678	36655P	Output Shaft, [E4OD] (2WD) (23" Long) (With Bearing) (No Speed-O Gear)	1	
678	36655PA	Output Shaft, [E4OD] (2WD) (23" Long) (With Cup Plug) (No Speed-O Gear)	1	
680	36412	Governor, [C-6] 1966-76	1	
680	36412A	Governor, [C-6] 1977-Up	1	
680	36412C	Governor, [C-6] (Cast # RF-E4TP) 1980-Up	1	E4TZ-7C063-A
680	36412B	Governor, [C-6] (Diesel) (Cast # 85TZ7C063)	1	
685	36412S	Support, (Governor) (With 3-Ring Grooves)	1	C7AZ-7D220-A
690	36430	Gear, [C-6] (Parking)	1	
690	36430E	Gear, [E4OD] (Parking) (*Washer Type) 1989-98	1	E9TZ-7A233-A
690	36430F	Gear, [4R100] (Parking) (*Bearing Type) 1999-Up	1	
697	36325	Oil Distribution Sleeve, [C-6] (4-Bolts to Case)	1	C6AZ-7C232-A
		VALVE BODIES (REBUILT)		
740	FD-3303	Valve Body, [C-6] (Gas) 1966-1991	1	
740	FD-3304	Valve Body, [C-6] (Diesel)	1	
740	FD-3380	Valve Body, [E4OD] (Casting # E9) 1989	1	
740	FD-3381	Valve Body, [E4OD] (Casting # F0 thru F5) 1990-95	1	
740	FD-3383	Valve Body, [E4OD / 4R100] (Casting # F6) (5-Check Balls) 1995-98	1	
740	FD-3383B	Valve Body, [E4OD / 4R100] (Casting # F6) (4-Check Balls) 1996-Up	1	
740	FD-3385	Valve Body, [E4OD / 4R100] (Casting # F8) 1998-Up	1	
		VALVE BODIES		
740	36941	Valve Body, [C-6] (With Detent) 1966-69	1	
740	36946	Valve Body, [C-6] 1970-E77	1	
740	36947	Valve Body, [C-6] (Gas) L1977-Up	1	
740	36945	Valve Body, [C-6] (Diesel) L1977-Up	1	
740	36947D	Valve Body, [E4OD] (With Manual Valve) (Gas) 1989	1	
740	36947E	Valve Body, [E4OD] (With Manual Valve) (Gas) 1990-95	1	
740	36947F	Valve Body, [E4OD / 4R100] (With Manual Valve) (Gas) 1996-Up (Cast # RFF6 & RFF8)	1	
		VALVE BODY COMPONENTS		
741	76593	Check Ball, [E4OD] (Valve Body) (5/16")	AR	E7DZ-7E195-A
741	13924	Check Ball, [E4OD] (Valve Body) (1/4")	AR	E0AZ-7E195-B
741	K36981	Spring, "No Bang" [E4OD] (Reverse Modulator) (*Fixes 3 Transmissions)	1	Superior
741	36948-09K	Accumulator Kit, [E4OD] (3-4 Accumulator Control Valve) (1-Valve, 1-Retaining Clip & 4-Spring Shims) **(*If Bore Is Damaged Use 36948-12)**	1	Sonnax
741	36948-13K	Accumulator Kit, [E4OD] (1-2 & 2-3 Accumulator Control Valve) (1-Valve, 1-Retaining Clip & 4-Spring Shims) **(*If Bore Is Damaged Use 36948-12)**	1	Sonnax
741	E4-VL-LR3	Accumulator Kit, [E4OD / 4R100] (2-3-4 Accumulator Valves) (3-Pack) 1989-2002	1	Transgo
741	SCE40D	Sure Cure Kit, [E4OD]	1	Sonnax
741	SC4R100HD	Sure Cure Kit, [4R100]	1	Sonnax
741	36948-05K	Valve & Sleeve, [E4OD / 4R100] (Line Pressure Modulator) (.372")	1	Sonnax
741	36948-03K	Valve & Sleeve, [E4OD / 4R100] (Line Pressure Modulator) (.331")	1	Sonnax
741	96948-01K	Valve & Sleeve, [E4OD / 4R100] (Line Pressure Modulator) (.427")	1	Sonnax
741	96948-05K	Valve & Sleeve, [E4OD / 4R100] (Line Pressure Modulator) (.500")	1	Sonnax
741	36947-13K	Manual Valve, [E4OD / 4R100] (With E-Clip) (Oversized) **(*Requires: F-36947-TL13 & VB-FIX)**	1	Sonnax

C-6/E4OD/4R100

	F-36947-TL13	Reamer, (*For 36947-13K)	1	
	VB-FIX	Valve Body Reaming Fixture	1	Sonnax
741	36946-13	Spring Kit, [C-6] (2WD) (Gas) (Main Pressure Regulator) (Elevated Pressure) (20 Per Kit)	1	Sonnax
741	36946-10K	Valve, [C-6] (Pressure Regulator) (Oversized) **(*Must Use Reamer # 36946-TL)**	1	Sonnax
741	36424-10	Spring Kit, [E4OD / 4R100] (Main Pressure Regulator) (Elevated Pressure) (20 Per Kit)	1	Sonnax
741	K028	Valve Assembly, [C-6] (Steel Boost Valve & Sleeve)	1	Superior
741	36946-01K	Valve & Sleeve Kit, [C-6] (Reverse Boost) (O-Ring Style) (Gas)	1	Sonnax
741	36946-02K	Valve & Sleeve Kit, [C-6] (Reverse Boost) (O-Ring Style) (Diesel)	1	Sonnax
741	36946-03K	Valve & Sleeve Kit, [C-6] (Reverse Boost) (OE Style) (Diesel)	1	Sonnax
741	36946-04K	Valve & Sleeve Kit, [C-6] (Reverse Boost) (OE Style) (Gas)	1	Sonnax
741	36941-01K	Valve & Sleeve Kit, [C-6] (Reverse Boost) (Hi-Performance or Heavy Duty) (*Clicker Style Only) 1976-Earlier	1	Sonnax
741	36947-06K	Valve & Sleeve Kit, [E4OD / 4R100] (Low / Reverse Modulator Valve) (Plunger & Sleeve) 1996-Up	1	Sonnax
		HARD PARTS (Continued)		
742	36948	Accumulator Assembly, [E4OD] 1989	1	
742	36948C	Accumulator Assembly, [E4OD] (Cast # RFE9) 1990-94	1	
742	36948CA	Accumulator Assembly, [E4OD] (Cast # RFF5) 1995	1	
742	36948D	Accumulator Assembly, [E4OD] (Cast # RFF6) 1996-Up	1	
747	36745	Seperator Plate, [E4OD] (Valve Body) (With 2-Half Moon & 1-“U” Notch) E1989	1	F4TZ-7A008-A
747	36745C	Seperator Plate, [E4OD] (Valve Body) (With 1-Half Moon Notch)	1	
747	36745D	Seperator Plate, [E4OD] (Valve Body) (With 1-Half Moon & 2-“V” Notches)	1	
747	36745A	Seperator Plate, [E4OD] (Valve Body) (With 2-Half Moon Notches)	1	F5TZ-7A008-A
747	36745E	Seperator Plate, [E4OD] (Valve Body) (With 1-“V” Notch)	1	F6TZ-7A008-B
747	36745B	Seperator Plate, [E4OD] (Valve Body) (With 3-“V” Notches)	1	
747	36745F	Seperator Plate, [4R100] (Valve Body) (With PTO) (Cast # F81Z-BA) 1998-Up	1	
747	36745G	Seperator Plate, [4R100] (Valve Body) (Non PTO) (Cast # F81Z-DA) 1998-Up	1	
760	36606D	Case, [C-6] (360-390) (Round Bell) (Screw-In Modulator) 1966-72	1	
760	36606DA	Case, [C-6] (360-390) (Round Bell) (Push-In Modulator) 1972-76	1	
760	36606	Case, [C-6] (Big Block) (Flat Top) (Screw-In Modulator) 1968-72	1	
760	36606A	Case, [C-6] (Big Block) (Flat Top) (Push-In Modulator) 1973-E76	1	
760	36606B	Case, [C-6] (Big Block) (Flat Top) (Push-In Modulator) L1976-E86 (Cast # RF-D7)	1	
760	36606BA	Case, [C-6] (Big Block) (Flat Top) (Push-In Modulator) L1986-Up (Cast # RF-E7)	1	
760	36606C	Case, [C-6] (Diesel) (Cast # RF-E3) 1983-96	1	E8TZ-7005-G
760	36606CA	Case, [C-6] (Diesel) (Cast # RF-F7) 1997-Up	1	
760	36605	Case, [C-6] (Small Block) (Screw-In Modulator) 1968-72	1	
760	36605A	Case, [C-6] (Small Block) (Push-In Modulator) 1973-E76	1	
760	36605B	Case, [C-6] (Small Block) (Push-In Modulator) (Cast # RF-D7) L1976-E86	1	
760	36605BA	Case, [C-6] (Small Block) (Push-In Modulator) (Cast # RF-E7) L1986-Up	1	
760	36605F	Case, [E4OD] (Big Block) (With 4-Bath Tub Slots) 1989	1	
760	36605FA	Case, [E4OD] (Big Block) (With 3-Bath Tub Slots) 1990-95	1	
760	36605FB	Case, [E4OD] (Big Block) (With 3-Bath Tub Slots) 1996-97	1	
760	36605E	Case, [E4OD] (5.0L / 5.8L) (With 4-Bath Tub Slots) 1989	1	
760	36605EA	Case, [E4OD] (5.0L / 5.8L) (With 3-Bath Tub Slots) 1990-95	1	

760	36605J	Case, [E4OD] (5.4L / 5.8L / 6.8L) (V-10) (With 2-Bath Tub Slots) (3-Bolt Starter) 1996-97	1	
760	36605H	Case, [4R100] (5.4L / 6.8L) (2-Bath Tub Slots) (3-Bolt Starter) (No PTO) (Input Speed Sensor) 1998-Up	1	
760	36605HA	Case, [4R100] (5.4L / 6.8L) (2-Bath Tub Slots) (3-Bolt Starter) (With PTO) (Input Speed Sensor) 1998-Up	1	
760	36605G	Case, [E4OD] (Diesel) (With 4-Bath Tub Slots) 1989	1	
760	36605GA	Case, [E4OD] (Diesel) (With 3-Bath Tub Slots) 1990-95	1	
760	36605GB	Case, [E4OD] (Diesel) (With 3-Bath Tub Slots) 1996-97	1	
760	36605L	Case, [4R100] (7.3L Diesel) (No PTO) (With 3-Bath Tub Slots) (Turbo Speed Sensor) 1998-Up	1	
760	36605LA	Case, [4R100] (7.3L Diesel) (With PTO) (3-Bath Tub Slots) (Turbo Speed Sensor) 98-Up	1	
		CASE COMPONENTS		
761	36911	Drain Back Valve, [E4OD] (Goes in 5/16" Cooler Line)	1	F0TZ-7D174-A
996	36605-02K	Cooler By-Pass Check Ball Assembly, [E4OD / 4R100] (Includes: Check Ball, Valve, Spring, & 7/ O-Rings)	1	Sonnax
783	36743-01	Shim, [E4OD] (Center Support Bolt)	1	Sonnax
916	36611	Band Strut, [C-6] (Intermediate) (Flat)	1	C6AZ-7D029-C
991	36342	Kickdown Lever, [C-6] (Internal) L1976-Up	1	D0AZ-7D261-B
	TK-56-RTD	Tool Kit, [AOD / AODE / 4R70W] (Shift Linkage Pin Remover & Installer)	1	Teckpak
		HARD PARTS (Continued)		
765	36950	Pan, [C-6] (2WD) (Shallow) 1966-74	1	E9TZ-7A194-A
765	36950B	Pan, [C-6] (2WD) (1-7/8" Deep) 1975-Up	1	F5TZ-7A194-D
765	36950A	Pan, [C-6] (4x4)	1	E5TZ-7A194-C
765	36950E	Pan, [E4OD] (2WD)	1	
765	36950F	Pan, [E4OD] (4x4)	1	
765	36950EA	Pan, [4R100] (2WD) (*For Reusable Gasket) 1998-Up	1	
765	36950FA	Pan, [4R100] (4x4) (*For Reusable Gasket) (With Drain Plug) 1998-Up	1	
765	36950FB	Pan, [4R100] (4x4) (*For Reusable Gasket) (No Drain Plug) 1998-Up	1	
770	36612	Extension Housing, [C-6] (2WD) (Aluminum) (*All Except Lincoln)	1	
770	36612C	Extension Housing, [C-6] (2WD) (Aluminum) (*Lincoln Only)	1	
770	36612D	Extension Housing, [C-6] (2WD) (*Bolt-on Type Yoke)	1	
770	36612B	Extension Housing, [C-6] (4x4) (Aluminum)	1	
770	36612A	Extension Housing, [C-6] (4x4) (8-3/4") (Cast Iron)	1	
770	36612AA	Extension Housing, [C-6] (4x4) (5-3/4") (Cast Iron)	1	
770	36612E	Extension Housing, [E4OD] (2WD) 1989-97	1	
770	36612J	Extension Housing, [4R100] (2WD) (10-1/2") (3.180"OD Seal) (No Sensor)	1	
770	36612JA	Extension Housing, [4R100] (2WD) (10-1/2") (3.180"OD Seal) (With Sensor)	1	
770	36612G	Extension Housing, [E4OD] (2WD) (10-1/2") (2-1/2"OD Seal) (No Sensor) (No Speed-O Hole) 1998-Up	1	
770	36612GA	Extension Housing, [E4OD] (2WD) (10-1/2") (2-1/2"OD Seal) (Sensor Hole on Top) 1998-Up	1	
770	36612GB	Extension Housing, [E4OD] (2WD) (10-1/2") (2-1/2"OD Seal) (No Sensor Hole) (With Speed-O Hole) 1998-Up	1	
770	36612F	Extension Housing, [E4OD] (4x4) (Aluminum) 1989-97	1	
770	36612K	Extension Housing, [E4OD / 4R100] (4x4) (Aluminum) (With Speed Sensor) 1998-Up (Cast # RF-F81P)	1	
770	36612H	Extension Housing, [E4OD / 4R100] (4x4) (Cast Iron) (With Speed Sensor) 1998-Up	1	

C-6/E4OD/4R100

770	36612HA	Extension Housing, [E4OD / 4R100] (4x4) (Aluminum) (Without Speed Sensor) 1998-Up	1	
775	26761	Converter Nut, [C-6] (Self Locking)	4	
775	30109A	Converter Plug, [C-6] (Allen Head)	4	
775	30109B	Converter Plug, [C-6] (7/16" Hex Head)	4	
779	26341-01	Pan Bolt, [C-6] (Bag of 100ea)	AR	Sonnax
779	96704-01	Pan Bolt, [E4OD / 4R100] (Metric) (Bag of 100ea)	AR	Sonnax
783	36917	Bolt, [E4OD] (Center Support to Case)	3	E9TZ-7Z059-B
784	36916	Bolt, [E4OD / 4R100] (Intermediate Clutch Cylinder) (1.235" Long) (12mm)	1	E9TZ-7Z059-A
839	34996	Pan Magnet, (Retangular)	1	
843	36994	Bracket, [C-6] (Modulator)	1	
848	36990	Rotor, [4R100] (18 Teeth)	1	
853	36420	Cushion, [C-6 / E4OD] (Forward Clutch)	1	D6AZ-7E085-B
854	36810	Cushion, [C-6] (Reverse Clutch) (.062") L1976-Up	1	
854	36810A	Cushion, [C-6] (Reverse Clutch) (.085") 1992-Up	1	
854	36811	Cushion, [E4OD] (Reverse Clutch) (.080") 1996-Up	1	F6TZ-7D085-A
	K36928	Snap Ring Kit, [C-6] 1966-96	1	26680
	K36187	Snap Ring Kit, [E4OD /4R100] 1989-Up	1	26681
860	36602	Snap Ring, [E4OD / 4R100] (Overdrive Pressure Plate & Intermediate Overdrive Cylinder to Case) (.059")	1-2	
860	36602A	Snap Ring, [E4OD / 4R100] (Overdrive Pressure Plate & Intermediate Overdrive Cylinder to Case) (.079")	1-2	
860	36602B	Snap Ring, [E4OD / 4R100] (Overdrive Pressure Plate & Intermediate Overdrive Cylinder to Case) (.100")	1-2	
860	36602C	Snap Ring, [E4OD / 4R100] (Overdrive Pressure Plate & Intermediate Overdrive Cylinder to Case) (.117")	1-2	
860	36602D	Snap Ring, [E4OD / 4R100] (Overdrive Pressure Plate & Intermediate Overdrive Cylinder to Case] (.139")	1-2	
862	36600	Snap Ring, [E4OD / 4R100] (Overdrive Piston Return) (.059")	1	
862	36600A	Snap Ring, [E4OD / 4R100] (Overdrive Piston Return) (Heavy Duty Wider)	1	
862	36744-01	Snap Ring, [E4OD / 4R100] (Overdrive Piston Return) (Spiral)	1	Sonnax
877	36601	Snap Ring, [E4OD / 4R100] (Coast Pressure Plate) (.055")	1	
877	36601A	Snap Ring, [E4OD / 4R100] (Coast Pressure Plate) (.071")	1	
877	36602B	Snap Ring, [E4OD / 4R100] (Coast Pressure Plate) (.086")	1	
878	36310	Snap Ring, [C-6 / E4OD / 4R100] (Forward & Direct Pressure Plate) (.058")	1-2	
878	36310A	Snap Ring, [C-6 / E4OD / 4R100] (Forward & Direct Pressure Plate) (.067")	1-2	
878	36310B	Snap Ring, [C-6 / E4OD / 4R100] (Forward & Direct Pressure Plate) (.076")	1-2	
878	36301C	Snap Ring, [C-6 / E4OD / 4R100] (Forward & Direct Pressure Plate) (.090")	1-2	
878	36310D	Snap Ring, [C-6 / E4OD / 4R100] (Forward & Direct Pressure Plate) (.094")	1-2	
878	36310E	Snap Ring, [C-6 / E4OD / 4R100] (Forward & Direct Pressure Plate) (.112")	1-2	
878	36310F	Snap Ring, [C-6 / E4OD / 4R100] Forward & Direct Pressure Plate (.130")	1-2	
878	36310G	Snap Ring, [C-6 / E4OD / 4R100] (Forward & Direct Pressure Plate) (.043")	1-2	
878	36310H	Snap Ring, [C-6 / E4OD / 4R100] (Forward & Direct Pressure Plate) (.050")	1-2	
879	36315	Snap Ring, [C-6 / E4OD / 4R100] (Direct Clutch Retainer)	1	
884	36311	Snap Ring, [C-6 / E4OD / 4R100] (Holds Sun Gear to Shell)	1	
892	36603	Snap Ring, [C-6 / E4OD / 4R100] (Reverse Clutch Pressure Plate to Case) (.078")	1	
893	36314	Snap Ring, [C-6] (Reverse Clutch Spring Retainer to Case)	1	
894	36312	Snap Ring, [C-6] (Output Shaft) (Front) (.055") 1966-76	1	
894	36312A	Snap Ring, [C-6 / E4OD / 4R100] (Output Shaft) (Front) (.075") 1977-Up	1	

895	36316	Snap Ring, [C-6] (Governor Support) (Narrow) 1966-76	1	
895	36316A	Snap Ring, [C-6] (Governor Support) (Wide) 1977-Up	1	
905	K36940	Servo Assembly, [C-6] (Super Servo)	1	
906	36528S	Spring, [C-6] (Intermediate Servo)	1	C8SZ-7D028-B
906	36528ES	Spring, [E4OD] (Intermediate Servo) (1st Design)	1	
907	36528	Piston, [C-6] (Intermediate Servo) (No Dimples) (*Fits “L” Cover) (2.095”) 1966-74	1	D5TZ-7D021-A
907	36528A	Piston, [C-6] (Intermediate Servo) (1-Dimple) (*Fits “N” Cover) (1.980”) 1974-Up	1	D5UZ-7D021-A
907	36528B	Piston, [C-6] (Intermediate Servo) (2-Dimples) (*Fits “P” Cover) (2.130”) 1974-Up	1	D5TZ-7D021-B
907	36528C	Piston, [C-6] (Intermediate Servo) (3-Dimples) (*Fits “S” Cover) (2.050”) 1974-Up	1	D7AZ-7D021-A
907	36528D	Piston, [C-6] (Intermediate Servo) (Early) (Aluminum) (*Fits “D” Cover)	1	
907	K36528R	Servo Kit, [C-6] (Intermediate Servo) (R-Code)	1	Sonnax
907	36528E	Piston, [E4OD] (Servo) (1st Design) (*Uses a Cover # 909)	1	F6TZ-7D021-A
909	36340	Cover, [C-6] (Intermediate Servo) (Cast Letter -L)	1	
909	36340A	Cover, [C-6] (Intermediate Servo) (Cast Letter -N)	1	
909	36340C	Cover, [C-6] (Intermediate Servo) (Cast Letter -S)	1	
909	36340B	Cover, [C-6] (Intermediate Servo) (Cast Letter -P)	1	
909	36340D	Cover, [C-6] (Intermediate Servo) (Cast Letter -D)	1	
909	36340DA	Cover, [C-6] (Intermediate Servo) (Cast Letter -G)	1	
916	36916EA	Servo Lever, [C-6] (Intermediate Hi-Performance) (R-Code) (OEM “E” Ratio 1.85)	1	Sonnax
916	36916FA	Servo Lever, [C-6] (Intermediate Hi-Performance) (R-Code) (OEM “F” Ratio 2.30”)	1	Sonnax
916	36916FF	Servo Lever, [C-6] (Intermediate Hi-Performance) (*Special “FF” Ratio 2.82”)	1	Sonnax
916	36689	Band Anchor Strut, [C-6] (Intermediate) (Wedge Shaped)	1	
919	36610B	Adjusting Bolt, [C-6] (Intermediate Band)	1	
922	36610	Nut, [C-6] (Band Adjusting Nut)	1	375185-S100
	K36926	Spring Kit, [E4OD / 4R100] (Accumulator) (Outer) (3 Per Pack)	1	Superior
	K36910	Spring Kit, [E4OD / 4R100] (Accumulator) (Inner) (3 Per Pack)	1	ATSG
	K040	Accumulator Kit, [E4OD / 4R100] (Includes: 3-Steel Valves & 3-Springs)	1	Superior
	36948-12	Bore Sizing Tool, [E4OD] (Accumulator) (2nd / 3rd / 4th Accumulator Valve) (*Repairs Worn Bore)	1	Sonnax
960	36964	Piston, [E4OD] (Overdrive Clutch) 1989-95	1	E9TZ-7A262-A
960	36964A	Piston, [E4OD] (Overdrive Clutch) (Bonded Rubber) 1996-Up	1	F6TZ-7A262-AA
962	36966	Piston, [E4OD / 4R100] (Intermediate Clutch) (Aluminum)	1	E9TZ-7E005-A
964	36434A	Piston, [C-6 / E4OD] (Forward Clutch) 1976-Up	1	D6AZ-7A262-A
965	36435	Piston, [C-6] (Direct Clutch Piston)	1	D8AZ-7D402-A
965	36435E	Piston, [E4OD / 4R100] (Direct Clutch)	1	E9TZ-7A262-C
966	36441	Piston, [C-6] (Reverse Clutch) 1966-E76	1	C6AZ-7D402-A
966	36441A	Piston, [C-6] (Reverse Clutch) L1976-Up	1	
966	36441E	Piston, [E4OD] (Reverse Clutch) (*Uses Lathe Cut Seals) 1989-95	1	E9TZ-7D402-A
966	36441F	Piston, [4R100] (Reverse Clutch) (*Uses Lip Seals) 1996-Up	1	F6TZ-7D402-A
969	36963	Piston Ring, [E4OD] (Coast Clutch) (Outer) (Steel) (*For Cast Iron Drum)	1	
969	36963A	Piston, [4R100] (Coast Clutch) (Molded Rubber) (*For Stamped Steel Drum)	1	F81Z-7A262-AA
970	36720	Diaphram Spring, [E4OD / 4R100] (Overdrive Clutch) 1989-Up	1	E9TZ-7B070-A
972	36721	Diaphram Spring, [E4OD / 4R100] (Intermediate Clutch) 1989-Up	1	E9TZ-7B070-B
974	36419	Spring, [C-6] (Forward Clutch Disc Spring) (.076”) 1966-E76	1	D9AZ-7B070-A
974	36419A	Spring, [C-6 / E4OD] (Forward Clutch Disc Spring) (.094”) L1976-Up	1	D9AZ-7B070-A
975	36446A	Spring, [C-6] (Direct Clutch Return) 1966-E76	10	C7ZZ-7B488-A

C-6/E4OD/4R100

975	K36452A	Springs W/Retainer, [C-6] (Direct Clutch Return) L1976-91	1	
975	K36452E	Springs W/Retainer, [E4OD / 4R100] (Direct Clutch Return) 1989-Up	1	E9TZ-7F235-A
976	36442	Springs, [C-6] (Reverse Clutch Return) 1966-E76	10	
976	K36451	Springs W/Retainer, [C-6] (Reverse Clutch Return) L1976-E86	1	D6AZ-7D406-A
976	36451E	Springs W/Retainer, [C-6 / E4OD] (Reverse Clutch Return) (3.00"ID) (4.925"OD) (18-Springs) L1986-Up	1	E6TZ-7D406-A
976	36451F	Springs W/Retainer, [4R100] (Reverse Clutch Return) (3.00"ID) (5.190"OD) (23-Springs) 1998-Up	1	F6TZ-7D406-A
979	36719	Diaphram Spring, [E4OD] (Coast Clutch)	1	E9TZ-7B070-C
979	36719A	Springs W/Retainer, [4R100] (Coast Clutch)	1	F81Z-7B070-AA
985	36447	Retainer, [C-6] (Direct Clutch Spring) 1966-E76	1	
986	36447A	Retainer, [C-6] (Reverse Clutch Spring) 1966-E76	1	
991	36677	Linkage Assembly, [C-6] (With Park Rod) (Internal) 1966-69	1	
991	36918	Detent Roller Arm, [E4OD]	1	E9TZ-7E332-A
991	36677A	Linkage Assembly, [C-6] (With Park Rod) (Internal) 1970-Up	1	
991	36918A	Detent Spring & Roller, [C-6]	1	
991	36677E	Linkage Assembly, [E4OD] (Internal) (With Park Rod) 1989-98	1	
	TK-56-RTD	Tool Kit, [4R100] (Shift Linkage Pin) (Remover & Installer)	1	Teckpak
992	36675	Lever W/Shaft, [C-6] (Shift) (External) (Car) (Floor Shift) 1966-69 (No Gormmet Type)	1	
992	36675A	Lever W/Shaft, [C-6] (Shift) (External) (Car) (Column Shift) 1966-69 (No Grommet Type)	1	
992	36675B	Lever W/Shaft, [C-6] (Shift) (External) (Truck) (Column Shift) 1966-69 (No Grommet Type)	1	
992	36675C	Lever W/Shaft, [C-6] (Shift) (External) (Car) (Floor Shift) 1970-E76 (*Uses 3/8" Grommet)	1	
992	36675D	Lever W/Shaft, [C-6] (Shift) (External) (Car) (Column Shift) 1970-E76 (*Uses 3/8" Grommet) (Cast # D5UP-AA)	1	
992	36675E	Lever W/Shaft, [C-6] (Shift) (Car) (Column Shift) 1970-E76 (3/8" Grommet) (Cast # D8TP-AA)	1	
992	36675F	Lever W/Shaft, [C-6] (Shift) (Truck) (Column Shift) 1970-E76 (3/8" Grommet) (Cast # D3TP-CA)	1	
992	36675G	Lever W/Shaft, [C-6] (Shift) (Car) (Floor Shift) L1976-Up (1/2" Grommet) (Cast # D5TP-AA)	1	
992	36675H	Lever W/Shaft, [C-6] (Shift) (Car) (Column Shift) L1976-Up (1/2" Grommet) (Cast # D2AP-AA)	1	
992	36675I	Lever W/Shaft, [C-6] (Shift) (Car) (Column Shift) L1976-Up (1/2" Grommet) (Cast # EOTP-CA)	1	
992	36675J	Lever W/Shaft, [C-6] (Shift) (External) (Truck) (Column Shift) L1976-Up (*Uses 1/2" Grommet)	1	
992	36676	Lever W/Shaft, [E4OD] (Shift) (External) (Truck) 1989-91	1	E9TZ-7A256-A
992	36676A	Lever W/Shaft, [E4OD] (Shift) (External) (Truck) 1992-98	1	F2UZ-7A256-B
992	36676B	Lever W/Shaft, [E4OD] (Shift) (External) (Truck) 1996-97 (Cast # F75P)	1	
992	36676C	Lever W/Out Shaft, [4R100] (Shift) (External) (Truck) (F2UP-BA) 1998-Up	1	
994	36677	Park Rod Actuator, [E4OD / 4R100] (10-3/8" long)	1	
995	K36678	Park Pawl Assembly, [C-6]	1	
995	K36678A	Park Pawl Assembly, [E4OD / 4R100] 1989-Up	1	
995	36678S	Spring, [E4OD / 4R100] (Park Pawl Return)	1	
996	36280	Fitting, [C-6] (Cooler Line) (Straight) (5/16" Line x 1/8" Pipe Thread) (Screw In Flared)	1	
996	36913	Cooler By-Pass Valve Assembly, [E4OD] 1997-Up (*Retro Fit)	1	2C3Z-7H322-AA
996	36605-02K	Cooler By-Pass Check Ball Assembly, [E4OD / 4R100] (Includes: Check Ball, Valve, Spring & (7) O-Rings)	1	Sonnax

996	36913A	Cooler By-Pass Valve Assembly, [4R100] 1998-Up	1	2C3Z-7H322-BA
999	36679	Tube, [C-6] (Governor) (Long)	1	C6AZ-7D000-B
999	36679A	Tube, [C-6] (Governor) (Short)	1	C6AZ-7D000-A

5R110W (TORQUESHIFT)

RWD 5 & 6 Speed

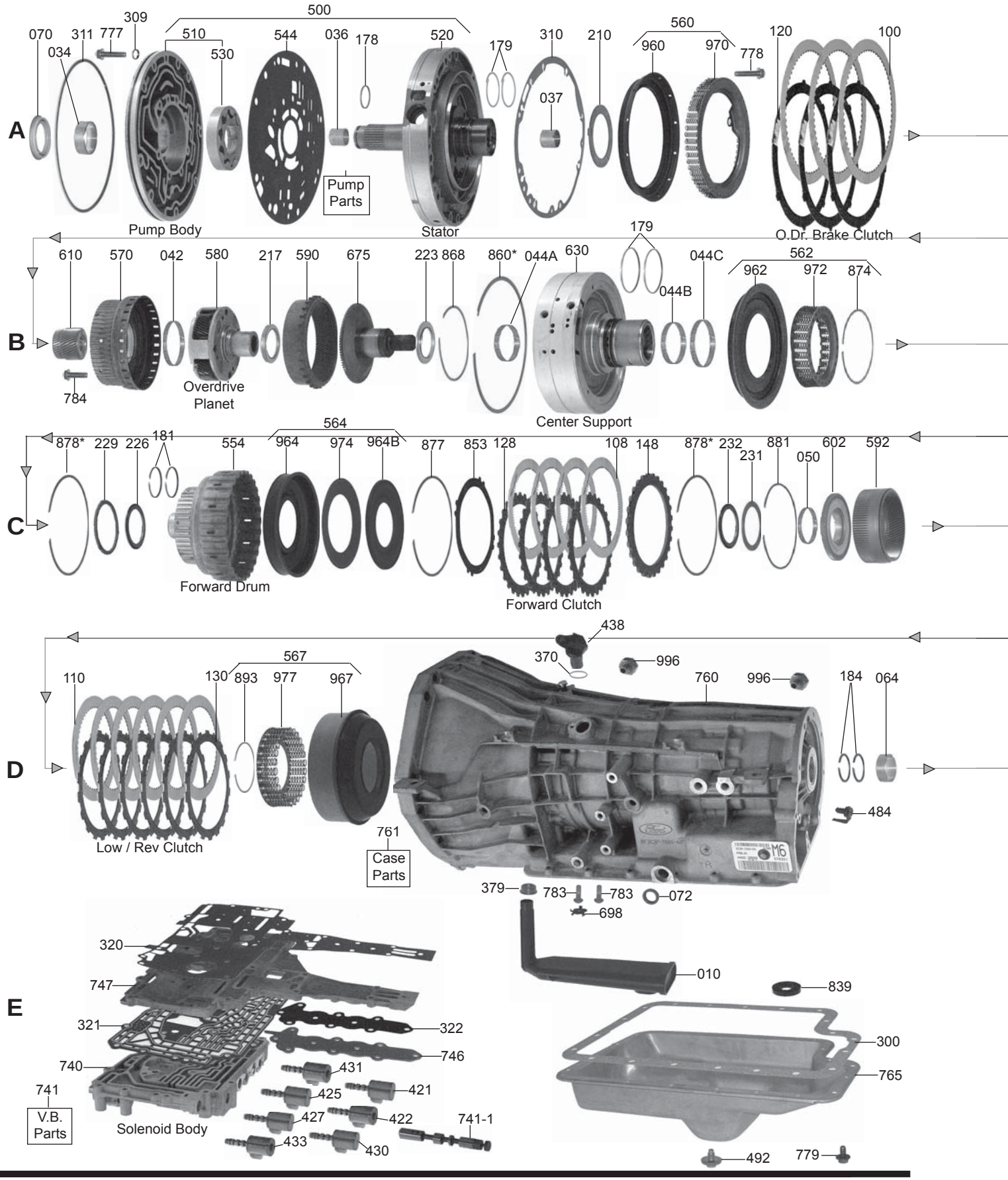

5R110W (TORQUESHIFT)

RWD 5 & 6 Speed

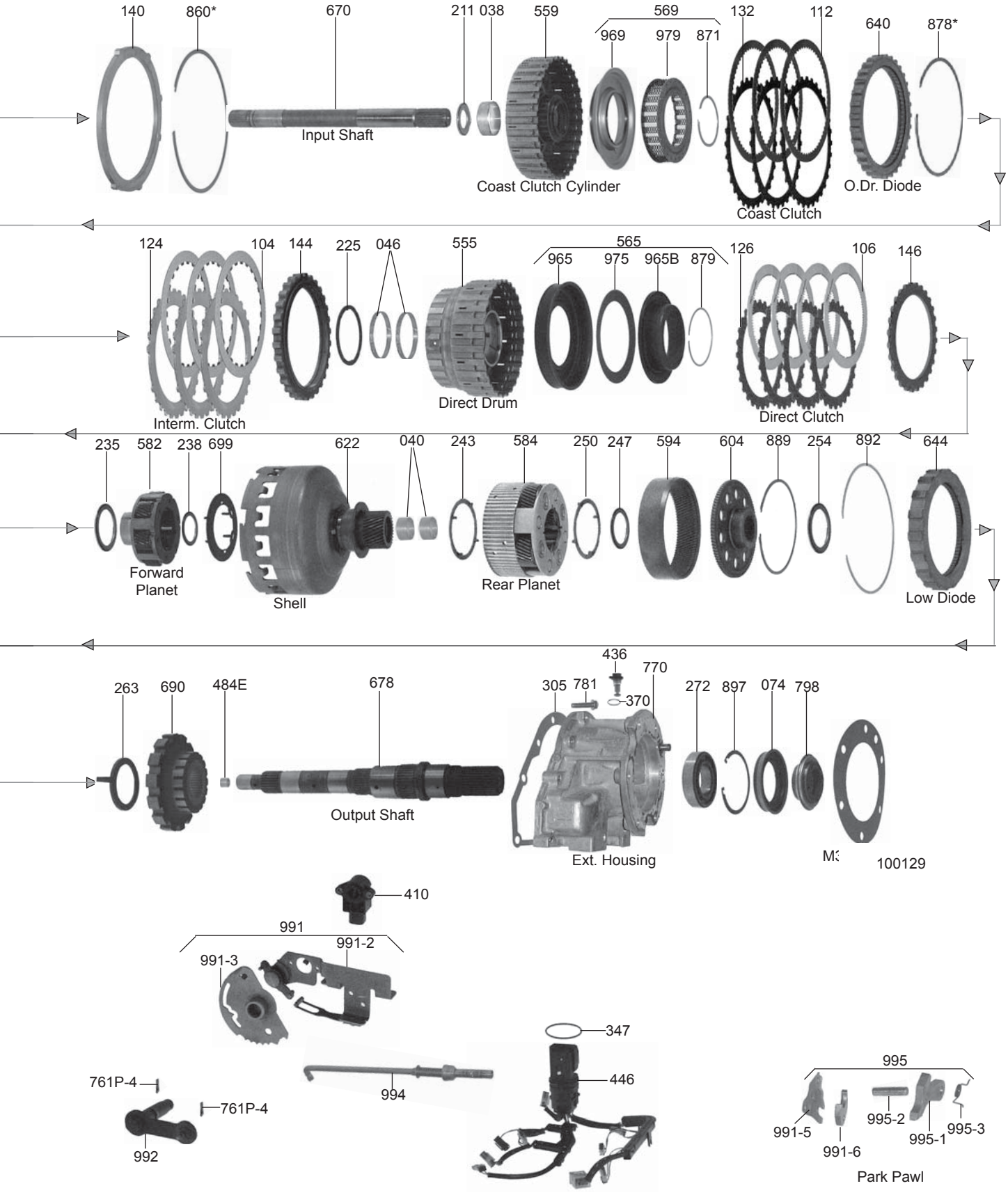

5R110W (TORQUESHIFT)

ILL#	PART#	DESCRIPTION	QTY	REF #
		OVERHAUL KITS		
	K36900L	Overhaul Kit, [5R110W] (Torqshift) (Without Pistons) 2003-Up	1	
	K36900LP	Overhaul Kit, [5R110W] (Torqshift) (With Pistons) 2003-Up	1	
		MASTER L/STEELS KIT		
	DK3600L-S	Master L/Steels Kit, [5R110W] (Torqshift) (Without Pistons) 2003-04	1	
	DK3600LP-S	Master L/Steels Kit, [5R110W] (Torqshift) (With Pistons) 2003-04	1	
	DK3600M-S	Master L/Steels Kit, [5R110W] (Torqshift) (Without Pistons) 2005-Up	1	
	DK3600MP-S	Master L/Steels Kit, [5R110W] (Torqshift) (With Pistons) 2005-Up	1	
		MASTER W/STEELS KIT		
	DK3600L	Master W/Steels Kit, [5R110W] (Torqshift) (Without Pistons) 2003-04	1	
	DK3600LP	Master W/Steels Kit, [5R110W] (Torqshift) (With Pistons) 2003-04	1	
	DK3600M	Master W/Steels Kit, [5R110W] (Torqshift) (Without Pistons) 2005-Up	1	
	DK3600MP	Master W/Steels Kit, [5R110W] (Torqshift) (With Pistons) 2005-Up	1	
		FILTERS		
010	36423H	Filter, [5R110W] 2003-10/31/07	1	3C3Z-7A098-AA
010	36423J	Filter, [5R110W] (Eleminates Cooler Filter) 11/1/2007-Up	1	
	36711	Cartridge Filter, [5R110W] (Paper Roll Style) (External) 2003-07	1	
	36711A	Filter, [5R110W] (By-Pass) **"The Trap"** (SPX Style With O-Ring) 2003-07	1	3C3Z-7B155BA
	36711B	Filter, [5R110W] (Cooler) (Sealed Unit) (*Fits Some 2007 & 2008 Models)	1	FT176
		BUSHINGS		
	K36905L	Bushing Kit, [5R110W] 2003-Up	1	
034	76001	Bushing, [5R110W] (Pump) (Bronze) (.702" Tall) 2003-Up	1	
036	36000A	Bushing, [5R110W] (Stator) (Front)	1	C6AZ-7B261-C
037	36001A	Bushing, [5R110W] (Stator) (Rear)	1	C6AZ-7D018-A
038	36016L	Bushing, [5R110W] (Coast Clutch Drum) (Babbitt) 2003-Up	1	
040	36005L	Bushing, [5R110W] (Shell With Sun Gear) 2003-Up	2	
042	36004L	Bushing, [5R110W] (Coast Clutch Hub) (.415" Wide) (3.0" ID) 2003-Up	1	
044	36024L	Bushing, [5R110W] (Center Support) (Front) (1.840"ID) 2003-Up	1	
044	36024LA	Bushing, [5R110W] (Center Support) (Center) (1.735"ID) 2003-Up	1	
044	36024LB	Bushing, [5R110W] (Center Support) (Rear) (1.985"ID) 2003-Up	1	
046	36003L	Bushing, [5R110W] (Direct Drum) (Front & Rear) (Takes 2) 2003-Up	2	
050	36013L	Bushing, [5R110W] (Forward Hub) (2.038"ID) 2003-05	1	
050	36013LA	Bushing, [5R110W] (Forward Hub) (1.908"ID) 2005-Up	1	
064	36007L	Bushing, [5R110W] (Case) (1.740"ID) (With Oil Pockets) 2003-Up	1	
		METAL CLAD SEALS		
070	36151A	Seal, [5R110W] (Front With Flange) (Black Viton) 2003-Up	1	E9TZ-7A248-B
072	6507A	Seal, [5R110W] (Linkage Shaft) 2003-Up	1	D5AZ-7B498-A
074	36157A	Seal, [5R110W] (Extension Housing) (4WD Adapter) (Bolt-on-Yoke) 2003-Up (With Flange) (3.885"OD) (2.386"ID)	1	3C3Z-7052-BA
074	36157B	Seal, [5R110W] (Extension Housing) (Rear) (2WD With Slip-Yoke) (2.506"OD) (With Boot) 2003-Up	1	
		FRICTION CLUTCH		

5R110W (TORQUESHIFT)

100	36103C	Friction, [5R110W] (Overdrive Brake Clutch) (.078") (32 Teeth) (Smooth) 2003-Up	3	3C3Z-7B164-AA
104	36105C	Friction, [5R110W] (Intermediate Clutch) (.078") (24 Teeth) (*Starburst) 2003-04	3	3C3Z-7B164-EA
104	36105D	Friction, [5R110W] (Intermediate Clutch) (.078") (96 Teeth) 2005-Up	3	5C3Z-7B164-AA
106	36304A	Friction, [5R110W] (Direct Clutch) (.078") (48 Teeth) (Smooth With 32-Grooves) 2003-Up	4	3C3Z-7B164-DA
108	36404D	Friction, [5R110W] (Forward Clutch) (.078") (90 Teeth) (Smooth With 32-Grooves) 03-04	4	3C3Z-7B164-BA
108	36404E	Friction, [5R110W] (Forward Clutch) (.078") (76 Teeth) 2005-Up	4	5C3Z-7B164-BA
110	36504C	Friction, [5R110W] (Low / Reverse Clutch) (.078") (72 Teeth) (Waffle) 2003-Up	6	3C3Z-7B164-CA
112	36101A	Friction, [5R110W] (Coast Clutch) (.078") (59 Teeth) (*Starburst) 2003-Up	3	3C3Z-7B164-FA
	K36100L	Friction Module, [5R110W] 2003-04	1	
	K36100M	Friction Module, [5R110W] 2005-Up	1	
		STEEL CLUTCH		
120	36104A	Steel, [5R110W] (Overdrive Brake) (.079") (6 Teeth) 2003-Up (Has 1 Wide Tooth)	2	3C3Z-7B442-AA
124	36106B	Steel, [5R110W] (Intermediate Clutch) (.116") (26 Teeth) 2005-Up	3	5C3Z-7B442-AA
124	36415C	Steel, [5R110W] (Intermediate Clutch) (.125") (26 Teeth) 2003-04	3	E9TZ-7B066-C
126	36305B	Steel, [5R110W] (Direct Clutch) (.079") (28 Teeth) (5.129"ID) 2003-Up	4-8	3C3Z-7B442-CA
128	36305B	Steel, [5R110W] (Forward Clutch) (.079") (28 Teeth) (5.120"ID) 2004-03	4	
128	36305C	Steel, [5R110W] (Forward Clutch) (.079") (28 Teeth) (5.380"ID) 2005-Up	4	5C3Z-7B442-BA
130	36505	Steel, [5R110W] (Low / Reverse Clutch) (.068") 2003-Up	6	E9TZ-7B442-E
132	36102B	Steel, [5R110W] (Coast Clutch) (.079") (32 Teeth) (Notched Teeth) 2003-Up (Takes 3)	3	3C3Z-7B442-EA
	K36110L	Steel Module, [5R110W] 2003-04	1	
	K36110M	Steel Module, [5R110W] 2005-Up	1	
		CLUTCH PRESSURE PLATES		
140	36415L	Pressure Plate, [5R110W] (Overdrive Clutch) (.320") (6 Teeth) 2003-04	1	F3TZ-7B066-A
140	36415LA	Pressure Plate, [5R110W] (Overdrive Brake Clutch) (.318" Thick at Edge) (Stepped) (5 Teeth Small, 2" Wide) 2005-Up	1	
144	36415M	Pressure Plate, [5R110W] (Intermediate Clutch) (.675" Thick) (30 Teeth) (Stepped) 03-04	1	3C3Z-7B066-BA
144	36415N	Pressure Plate, [5R110W] (Intermediate Clutch) (.523" Thick) (29 Teeth) (With 3-Humps, 1-Tooth Missing) 2005-Up	1	5C3Z-7B066-BA
146	36415P	Pressure Plate, [5R110W] (Direct Clutch) (.204" Thick) (25 Teeth or 28 Teeth) 2003-Up	1-2	3C3Z-7B066-AA
148	36415P	Pressure Plate, [5R110W] (Forward Clutch) (.204" Thick) (25 Teeth or 28 Teeth) 03-04	1-2	
148	36415Q	Pressure Plate, [5R110W] (Forward Clutch) (.292" Thick) (25 Teeth or 28 Teeth) 2005-Up	1	5C3Z-7B066-CA
		VALVE BODY KITS		
	K36908L	Shift Kit, [5R110W] (Gas & Diesel) 2003-06	1	Transgo
		OIL SEALING RINGS		
	K36901L	Ring Kit, [5R110W] 2003-Up	1	
178	36403T	Ring, [5R110W] (Stator) (Front) (Teflon)	1	
179	36402T	Ring, [5R110W] (Coast Clutch) (Teflon) 2003-Up	2	3C3Z-7D025-AA
179	36210L	Ring, [5R110W] (Direct Clutch) (.100" Wide) (Vespel) 2003-Up	1	
181	36401L	Ring, [5R110W] (Forward Clutch) (Vespel) 2003-Up	2	3C3Z-7D019-BA
184	36301	Ring, [5R110W] (Case to Output Shaft) (Teflon) 2003-Up	2	3C3Z-7D019-AB
		WASHERS & BEARINGS		
	K36907L	Washer Kit, [5R110W] 2003-Up	1	
210	36409E	Washer, [5R110W] (Stator) (.055" Thick) (Plastic), 2003-Up (#1 Thrust)	1	F1TZ-7D014-A
211	36445L	Bearing, [5R110W] (Stator to Overdrive Sun Gear) 2003-Up (#2 Thrust)	1	3L3Z-7C096-BA
217	96428	Bearing W/Races, [5R110W] (Overdrive Planet to Hub) 2003-Up (#4 Thrust)	1	E6DZ-7F240-A
223	96423	Bearing W/Races, [5R110W] (Overdrive Hub to Center Support) 2003-Up (#5 Thrust)	1	E6DZ-7G178-A
225	36448L	Washer, [5R110W] (Center Support) (Rear) (.177") (Plastic) (2-Tab) 2003-Up (#6 Thrust)	1	3C3Z-7L326-AA

5R110W (TORQUESHIFT)

229	36214L	Bearing W/Races, [5R110W] (Center Support to Forward Drum) (.140" Thick) (2.740"OD) 2003-Up (#7 Thrust)	1	3C3Z-7C096-AA
226	36422L	Washer, [5R110W] (Direct Drum to Forward Drum) (3-Slots) (Plastic) (.138" Thick) 2003-Up (#8 Thrust)	1	3C3Z-7F374-AA
231	36421	Washer, [5R110] (Forward Drum to Hub) (2.865"OD) (3-Half Round Tabs) (*For Small Planet) 2003-04 (#9 Thrust)	1	C9AZ-7D090-A
231	36421L	Washer, [5R110W] (Forward Drum to Hub) (Plastic) (3.030"OD) (3-Round Tabs) (*For Large Planet) 2005-Up	1	
232	36431L	Bearing W/Races, [5R110W] (Forward Drum to Hub) (.215" Thick) (2.100"OD) 2003-Up (*Also Fits [5R110W] Forward Planet to Sun Gear #238 & Sun Gear to Rear Hub #247) (#10 Thrust)	1-3	3C3Z-7D234-AA
235	36447	Bearing W/Races, [5R110W] (Forward Hub to Forward Planet) (.157" Thick) (3.385"OD) 2003-04 (#11 Thrust)	1	F81Z-7A166-AA
235	36447L	Bearing W/Races, [5R110W] (Forward Hub to Forward Planet) (.174" Thick) (2.865"OD) 2005-Up	1	5C3Z-7A166-AA
238	36431L	Bearing W/Races, [5R110W] (Forward Planet to Sun Gear) 2003-Up (#12 Thrust)	1	
243	36416L	Washer, [5R110W] (Shell With Sun Gear to Rear Planet) (Plastic) (4-Tab) 2003-Up (#13 Thrust)	1-2	3C3Z-7A166-CA
247	36431L	Bearing W/Races, [5R110W] (Sun Gear to Rear Hub) (#15 Thrust)	1	
250	36416L	Washer, [5R110W] (Rear Planet to Rear Hub) (Plastic) (4-Tab) 2003-Up (#14 Thrust)	1	
254	36447L	Bearing W/Races, [5R110W] (Rear Ring Gear Hub to Case) (3-Tabs) (.145" Thick) (2.508"OD) 2003-Up (#16 Thrust)	1	3C3Z-7G178-AA
263	36437L	Washer, [5R110W] (Case to Park Gear) (Plastic) (1-Tab) 2003-Up (#17 Thrust)	1	3C3Z-7B368-CA
272	36443L	Ball Bearing, [5R110W] (Extension Housing to Output Shaft) (4X4) (10-Balls) (.747" Thick) (1.77"ID) (3.348"OD) 2003-Up	1	
		GASKETS & RUBBER COMPONENTS		
300	36500G	Gasket, [5R110W] (Bottom Pan) (Bonded Rubber) 2003-Up	1	F6TZ-7A191-A
	36502	Gasket, [5R110W] (PTO Cover) 2003-Up	1	
305	13232W	Gasket, [5R110W] (Extension Housing to Case) (Paper / Metal) 2003-Up	1	3C3Z-7086-AA
309	36268	Gasket, [5R110W] (Pump Bolt Washer) 2003-Up	9	E9TZ-7G379-AA
310	36225	Gasket, [5R110W] (Pump to Case) 2003-Up	1	3C3Z-7A136-AA
311	13226E	O-Ring, [5R110W] (Pump) 2003-Up	1	E9TZ-7A248-A
320	36512	Gasket, [5R110W] (Valve Body to Case) 2003-Up	1	
321	36713L	Gasket, [5R110W] (Solenoid Screen) 2003-Up	1	
347	36520	O-Ring, [5R110W] (Case Connector) 2003-Up	1	3C3Z-7Z276-AA
370	36523	O-Ring, [5R110W] (Input Sensor) (1.00"OD) 2003-Up	1	3C3Z-7Z101-AA
370	36523	O-Ring, [5R110W] (Output Speed Sensor) (5/8"OD) 2003-Up	1	
		TECHNICAL MANUALS		
	TM5R110W	Technical Manual, [5R110W] (Torqshift)	1	ATSG
		ELECTRICAL COMPONENTS		
410	36955L	Sensor, [5R110W] (Trans Range Position) 2003-Up	1	
	36959	Switch, [5R110W] (Fluid Pressure) (Takes 5 Per Transmission) 2003 **(*Not Required After 2003)**	5	
421	36971A	Solenoid, [5R110W] (Intermediate) (SSPC-C) (Shift Solenoid "C") 2003-Up	1	3C3Z-7J136-BA
422	36971	Solenoid, [5R110W] (Direct Clutch) (SSPC-D) (Shift Solenoid "D") 2003-Up	1	3C3Z-7J136-AA
425	36971A	Solenoid, [5R110W] (TCC) 2003-Up	1	3C3Z-7J136-BA
427	36971A	Solenoid, [5R110W] (Overdrive) (SSPC-B) (Shift Solenoid "B") 2003-Up	1	3C3Z-7J136-BA
430	36971A	Solenoid, [5R110W] (Low / Reverse) (SSPC-E) (Shift Solenoid "E") 2003-Up	1	3C3Z-7J136-BA
431	36973A	Solenoid, [5R110W] (EPC) (Line Pressure) (PCA) 2003-Up	1	4C3Z-7G383-AA
433	36971	Solenoid, [5R110W] (Coast Clutch) (SSPC-A) (Shift Solenoid "A") 2003-Up	1	3C3Z-7J136-AA
436	36958	Sensor, [5R110W] (Output Shaft Speed) 2003-Up	1	3C3Z-7H103-AA

	36952	Sensor, [5R110W] (Oil Temperature) 2003-Up	1	3C3Z-7H141-AA
438	36957B	Sensor, [5R110W] (Input Shaft Speed) 2003	1	3C3Z-7M101-AA
438	36957C	Sensor, [5R110W] (Input Shaft Speed) 2004-Up	1	4C2Z-7M101-AA
446	36986	Wire Harness, [5R110W] (Internal) (With Connector) 2003-Up	1	4C3Z-7G276-AA
		MISCELLANEOUS COMPONENTS		
484	36861	Orifice Cup Plug, [5R110W] (Output Shaft) (Front)	1	39150-S
484	36799	Lube Orifice Plug, [5R110W] (In Rear of Case) 2003-Up	1	F81Z-7E380-AA
		HARD PARTS		
500	36424L	Pump Complete, [5R110W] 2003-04	1	
500	36424M	Pump Complete, [5R110W] (OEM) 2005-Up (*Will Retro to 2003)	1	7C3Z-7A103-A
510	36916L	Pump Body W/Gears, [5R110W] (Cast # 3C3P-7A105-AD) 2003-04	1	
510	36916M	Pump Body W/Gears, [5R110W] (Cast # 5C3P-7A105-AA) 2005-Up	1	
520	36425L	Stator, [5R110W] (Less Valve) (Cast # RF3C3P-78324-AA) 2003-04	1	
520	36425M	Stator, [5R110W] (Less Valve) (Cast # RF5C3P-78324-AA) 2005-Up	1	
		PUMP COMPONENTS		
	36940-01K	Sleeve & Plunger, [5R110W] (TCC Control Valve Assembly) 2003-Up	1	Sonnax
	36940-03K	Pressure Regulator Valve Kit, [5R110W] (Oversize) (Pressure Regulator Valve, Spring & Sleeve)	1	Sonnax
	F-36940-TL3	Reamer Set, (*For S136507PAK) (Includes: Reamer, Guide Pin, & Reamer Jig)	1	Sonnax
530	K36438L	Pump Gear Set, [5R110W] (9 Inner Teeth) (.729" Thick) 2003-Up	1	
544	36202L	Pump Plate, [5R110W] (*Fits Body With Cast # 3C3P-7A105-AD) 2003-04	1	
544	36202M	Pump Plate, [5R110W] (*Fits Body With Cast # 5C3P-7A105-AA) 2005-Up	1	
		HARD PARTS (Continued)		
554	36436L	Drum, [5R110W] (Forward Clutch) (.220 Ft Ring Gear Hub Bore) (4 Clutch) 2003-04	1	
554	36436M	Drum, [5R110W] (Forward Clutch) (.240 Ft Ring Gear Hub Bore) 2005-Up	1	3C3Z-7A360-SA
555	36411L	Drum, [5R110W] (Direct Clutch) (3 Clutch) (3.700" Tall) (*Uses 28 Teeth Steels) (24 Teeth Intermediate Clutch Hub) 2003-04	1	3C3Z-7F283-AA
555	36411M	Drum, [5R110W] (Direct Clutch) (3 Clutch) (3.700" Tall) (*Uses 28 Teeth Steels) (88 Teeth Intermediate Clutch Hub) 2005-Up	1	5C3Z-7F283-AA
559	36740L	Drum, [5R110W] (Coast Clutch) (Stamped Steel) (3 Clutch) 2003-04	1	3C3Z-7G387-AA
570	36741L	Hub/Reluctor, [5R110W] (Coast Clutch) (2.500" Thick) (6.025"OD) (30-Slots) (Bolts to Overdrive Planet) 2003-12/06	1	3C3Z-7H501-BA
580	36742L	Planet, [5R110W] (Overdrive 4 Gear) (*Uses a Bolt-on Coast Clutch Hub and Reluctor) 2003-06	1	3C3Z-7B446-AA
580	36742M	Planet, [5R110W] (Overdrive) (*Uses a Bolt-on Coast Clutch Hub & Reluctor) (29 Teeth) 2007-Up	1	
582	36440L	Planet, [5R110W] (Forward) (6 Gear) (Steel) (2.035"OD Hub) (4.230"OD Housing) (42 Teeth Sun Gear) (Small Planet) 2003-04	1	3C3Z-7A398-AA
582	36440M	Planet, [5R110W] (Forward) (6 Gear) (Steel) (1.905"OD Hub) (4.557"OD Housing) (55 Teeth Sun Gear) (Large Planet) 2005	1	5C3Z-7A398-BA
584	36408L	Planet, [5R110W] (Rear) (4 Gear) (72 Teeth Hub) (1st Design) (3.110" Overall Height) 2003-Up	1	3C3Z-7D006-AA
584	36408M	Planet, [5R110W] (Rear) (4 Gear) (72 Teeth Hub) (2nd Design) (2.985" Overall Height) 2003-Up (*Retros)	1	5C3Z-7D006-AB
590	36967L	Ring Gear, [5R110W] (Overdrive Planet) (94 Teeth) (30-Lugs) 2003-06	1	3C3Z-7A153-CA
590	36967M	Ring Gear, [5R110W] (Overdrive Planet) (99 Teeth) 2007-Up	1	
592	36439L	Ring Gear, [5R110W] (Forward Planet) (Small Planet) (78 Teeth) 2003-04	1	F81Z-7D392-AB
592	36439M	Ring Gear, [5R110W] (Forward Planet) (5.300:OD) (For Large Planet) (101 Teeth) 05-Up	1	5C3Z-7D392-AA
594	36426L	Ring Gear, [5R110W] (Rear Planet) (98 Teeth) (1.683" Thick) 2003-04	1	3C3Z-7A153-AA

5R110W (TORQUESHIFT)

602	36418L	Hub, [5R110W] (Forward Ring Gear) (Bushing Type) (2.038"ID of Bushing) (*For Small Planet) (78 Teeth) 2003-04	1	3C3Z-7B067-BA
602	36418M	Hub, [5R110W] (Forward Ring Gear) (Bushing Type) (1.908"ID of Bushing) (*For Large Planet) (101Teeth) 2005-06	1	5C3Z-7B067-AA
604	36427LA	Hub, [5R110W] (Rear Ring Gear) (1st Design) (With 10-Holes) 2003-Up	1	
604	36427L	Hub, [5R110W] (Rear Ring Gear) (2nd Design) (No Holes) 2003-Up	1	3C3Z-7D164-AA
610	36965L	Sun Gear, [5R110W] (Overdrive) (No Bushing) 2003-06	1	3C3Z-7D063-AA
610	36965M	Sun Gear, [5R110W] (Overdrive) 2007-Up	1	
622	36413L	Shell W/Sun Gear, [5R110W] (42 Teeth) (34 Teeth Sun Gear) 2003-04	1	3C3Z-7A019-BA
622	36413M	Shell W/Sun Gear, [5R110W] (55 Teeth) (34 Teeth Sun Gear) 2005-Up	1	5C3Z-7A019-AA
630	36743L	Center Support, [5R110W] (Aluminum) (1-Piece) (5.440" Tall) 2003-Up	1	3C3Z-7A130-AA
640	36237	Diode, [5R110W] (Coast) (Gas) (*Also the Pressure Plate) 2003-Up	1	5C3Z-7A089-CA
640	36237A	Diode, [5R110W] (Coast) (Diesel) (*Also the Pressure Plate) 2003-Up	1	7C3Z-7A089-A
644	36238	Diode, [5R110W] (Low) (2nd Design) (.865"Thick) (*Also Low / Reverse Clutch Pressure Plate) (*Dot on Inner Race)	1	5C3Z-7A089-AB
670	36410F	Input Shaft, [5R110W] (13-5/8" Long) 2003-Up	1	F81Z-7017-EA
675	36969L	Shaft, [5R110W] (Overdrive) (3.668" Long) (94 Teeth) 2003-06	1	3C3Z-7A658-AA
675	36969M	Shaft, [5R110W] (Overdrive) (99 Teeth) 2007-Up	1	
678	36655P	Output Shaft, [5R110W] (4x4) (15-1/2" Long)	1	3C3Z-7060-DD
678	36655N	Output Shaft, [5R110W] (2WD) (20" Long)	1	
690	36430L	Park Gear, [5R110W] (14-Lugs With 18 Teeth Reluctor) 2003-Up	1	3C3Z-7A233-AA
698	36799L	Orificed Plug, [5R110W] (Forward Clutch) (In Case Over 1-Center Support Bolt) 2003-04	1	3C3Z-7D376-AA
699	36402L	Oil Slinger, [5R110W] (Forward Planet) (Rear) (6-Tabs) (Plastic) (3.980"OD) 2003-04	1	3C3Z-7L339-AA
699	36402M	Oil Slinger, [5R110W] (Forward Planet) (Rear) (4-Tabs) (Plastic) (4.370"OD) 2005-Up	1	
699	36402N	Oil Slinger, [5R110W] (Forward Planet) (Rear) (6-Tabs) (Plastic) (4.370"OD) 2005-Up	1	
740	36947L	Solenoid Body Assembly, [5R110W] (7-Solenoid) (With Pressure Switches) 2003-Up	1	
740	36947M	Solenoid Body Assembly, [5R110W] (7-Solenoid) (No Pressure Switches)	1	
		VALVE BODY COMPONENTS		
741	36871	Manual Valve, [5R110W] (1st Design) 2003-11/14/03	1	
741	36871A	Manual Valve, [5R110W] (2nd Design) 2004-Up	1	5C3Z-7D376C
		HARD PARTS (Continued)		
746	36688	Plate, [5R110W] (Holds Solenoid Plate to Case) (10-Bolt) 2003-Up	1	3C3Z-7H038-AA
760	36605W	Case, [5R110W] (Gas or Diesel) (Without PTO Option) 2003-Up	1	3C3Z-7005-AB
760	36605M	Case, [5R110W] (Gas or Diesel) (With PTO Option) 2003-Up	1	
765	36950L	Pan, [5R110W] (Bottom) (4x4) (20-Bolt) (4-1/4" Deep) 2003-10/31/2007	1	3C3Z-7A194-AA
765	36950M	Pan, [5R110W] (Bottom) (4-3/4" Deep) 11/1/2007-Up	1	
770	36612L	Extension Housing, [5R110W] (4x4) (Aluminum) (Cast # RF3C3P)	1	
770	36612M	Extension Housing, [5R110W] (2WD) (9-1/4" Long) (Cast # 3C3P-7A040-EC) 2003-Up	1	
779	96704-01	Pan Bolts, [5R110W] (Metric) (Bag of 100ea)	AR	Sonnax
783	36917L	Bolt, [5R110W] (Center Support to Case) (Takes 2)	2	
	36948	Nut, [5R110W] (Output Shaft) (Holds Shaft to Extension Housing) (4x4) 2003-Up (Cast # 3C3P-4791-BA)	1	
853	36420L	Cushion, [5R110W] (Forward Clutch) (.048") (8 Teeth) (5.120"ID) 2003-04	1	3C3Z-7B070-BA
	K36187L	Snap Ring Kit, [5R110W] 2003-Up	1	
878	36601	Snap Ring, [5R110W] (Coast, Forward & Direct Clutch Pressure Plate) (.058") 2003-Up	3	E9TZ-7D483-A
878	36601A	Snap Ring, [5R110W] (Coast, Forward & Direct Clutch Pressure Plate) (.067") 2003-Up	3	E9TZ-7D483-B
878	36601B	Snap Ring, [5R110W] (Coast, Forward & Direct Clutch Pressure Plate) (.076") 2003-Up	3	E9TZ-7D483-C

5R110W (TORQUESHIFT)

878	36310C	Snap Ring, [5R110W] (Coast, Forward & Direct Clutch Pressure Plate) (.085") 2003-Up	3	
878	36310D	Snap Ring, [5R110W] (Coast, Forward & Direct Clutch Pressure Plate) (.094") 2003-Up	3	
878	36310E	Snap Ring, [5R110W] (Coast, Forward & Direct Clutch Pressure Plate) (.112") 2003-Up	3	
892	36885	Snap Ring, [5R110W] (Low / Reverse) (Holds Diode Spring in Case) (*Heavy Duty Replacement)	1	Sonnax
960	36964B	Piston, [5R110W] (Overdrive Brake Clutch) (Bonded) 2003-Up	1	3C3Z-7A262-DA
960	K36942L	Piston Kit, [5R110W] (Bonded) 2003-Up (8-Pistons)	1	
962	36966A	Piston, [5R110W] (Intermediate Clutch) (Bonded) (7-1/2"OD) 2003-Up	1	3C3Z-7E005-AA
964	36434B	Piston, [5R110W] (Forward Clutch) (Bonded) (6-5/16"OD) (1.125" Thick) 2003-Up (Cast # 3C3P-7A262-AH)	1	3C3Z-7A262-AA
964	36856	Piston/Retainer, [5R100W] (Forward (Balance) Clutch) (Bonded) (5-13/16"OD) (2.870"ID) (.420" Thick) 2003-Up	1	3C3Z-7H360-AA
965	36435G	Piston, [5R110W] (Direct Clutch) (6-5/16"OD) (Bonded) (1.005" Thick) 2003-Up (Cast # 3C3P-7F254-AC)	1	3C3Z-7A262-BA
965	36855	Piston/Retainer, [5R110W] (Direct (Balance) Clutch) (3.355"ID) (Bonded) (1.335" Thick) 2003-Up	1	3C3Z-7H359-AA
967	36441G	Piston, [5R110W] (Low / Reverse Clutch) (Bonded) (2.645" Thick) 2003-Up (Cast # 3C3P-7D402-AC)	1	3C3Z-7D402-AA
969	36963B	Piston, [5R110W] (Coast Clutch) (Bonded) 2003-Up	1	3C3Z-7A262-CA
970	36730L	Retainer W/Springs, [5R110W] (Overdrive Brake Clutch Piston) 2003-Up	1	3C3Z-7A222-BB
972	36721L	Spring & Retainer, [5R110W] (Intermediate Clutch) (24-Springs) 2003-Up	1	3C3Z-7F222-BA
974	36419M	Spring, [5R110W] (Forward Clutch Return) (Beveled) (5.775"OD) (3.670"ID) (.086" Thick) 2003-04	1	3C3Z-7B070-AA
975	36419L	Spring, [5R110W] (Direct Clutch) (Beveled) (.085") (5.775"OD) (4.324"ID) 2003-Up	1	
977	36451L	Spring/Retainer, [5R110W] (Low / Reverse Clutch) (26-Springs) (No Dimples) 2003-04	1	3C3Z-7D406-AA
977	36451M	Spring/Retainer, [5R110W] (Low / Reverse Clutch) (6-Dimples) 2005-Up	1	
979	36719L	Retainer W/Springs, [5R110W] (Coast Clutch Piston) 2003-Up	1	3C3Z-7G299-AA
991	K36676L	Linkage Assembly, [5R110W] (Internal) 2003-Up	1	
992	36675L	Shift Lever, [5R110W] (External) (1-Piece Type) 2003-Up	1	3C3Z-7A256-BA
994	36677L	Park Rod Actuator, [5R110W] (10-3/8" Long) 2003-Up	1	
996	36280L	Fitting, [5R110W] (Case) (*For Cooler Lines) (Front & Rear)	2	

AOD (FIOD)

RWD 4 Speed

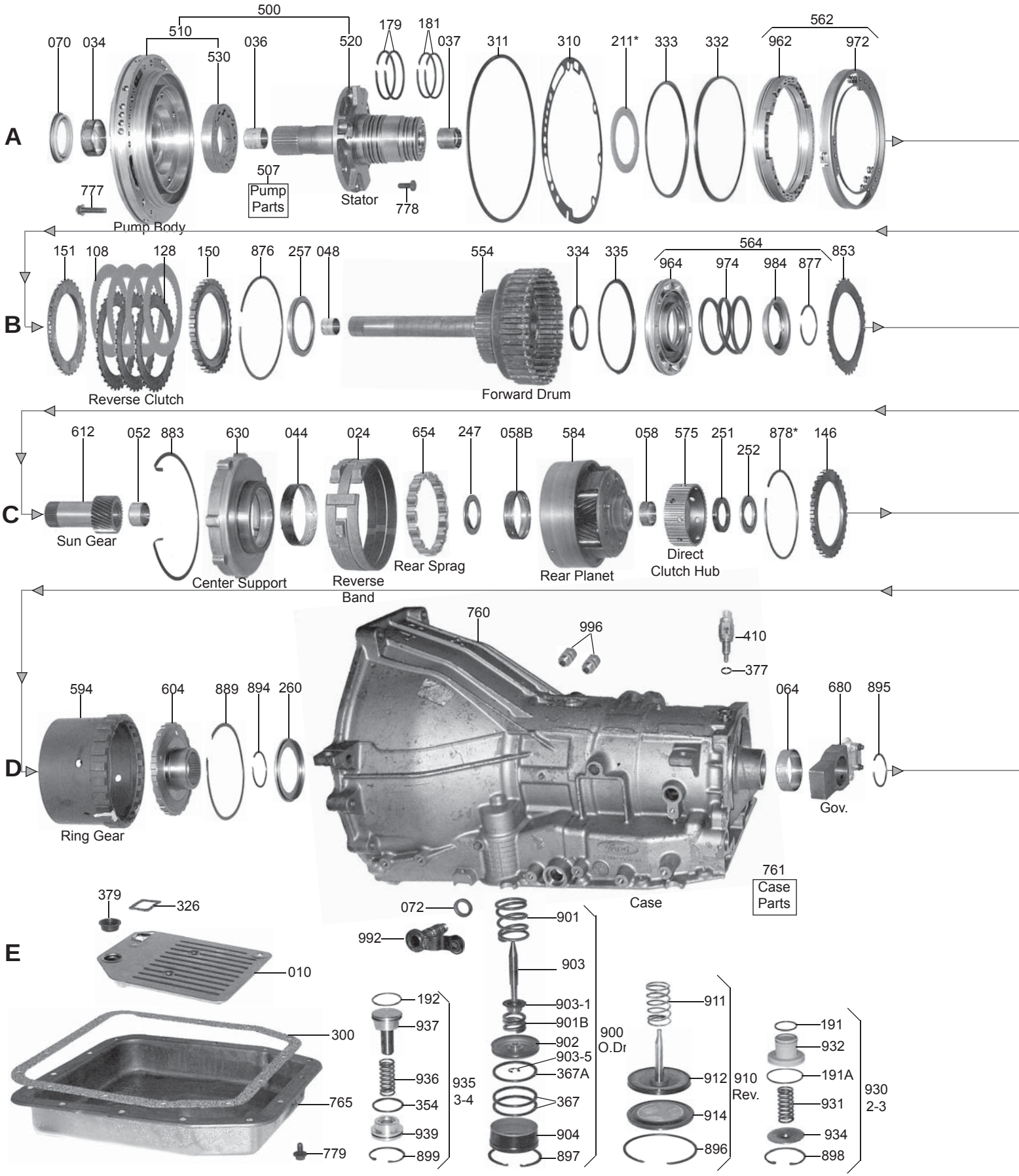

AOD (FIOD)

RWD 4 Speed

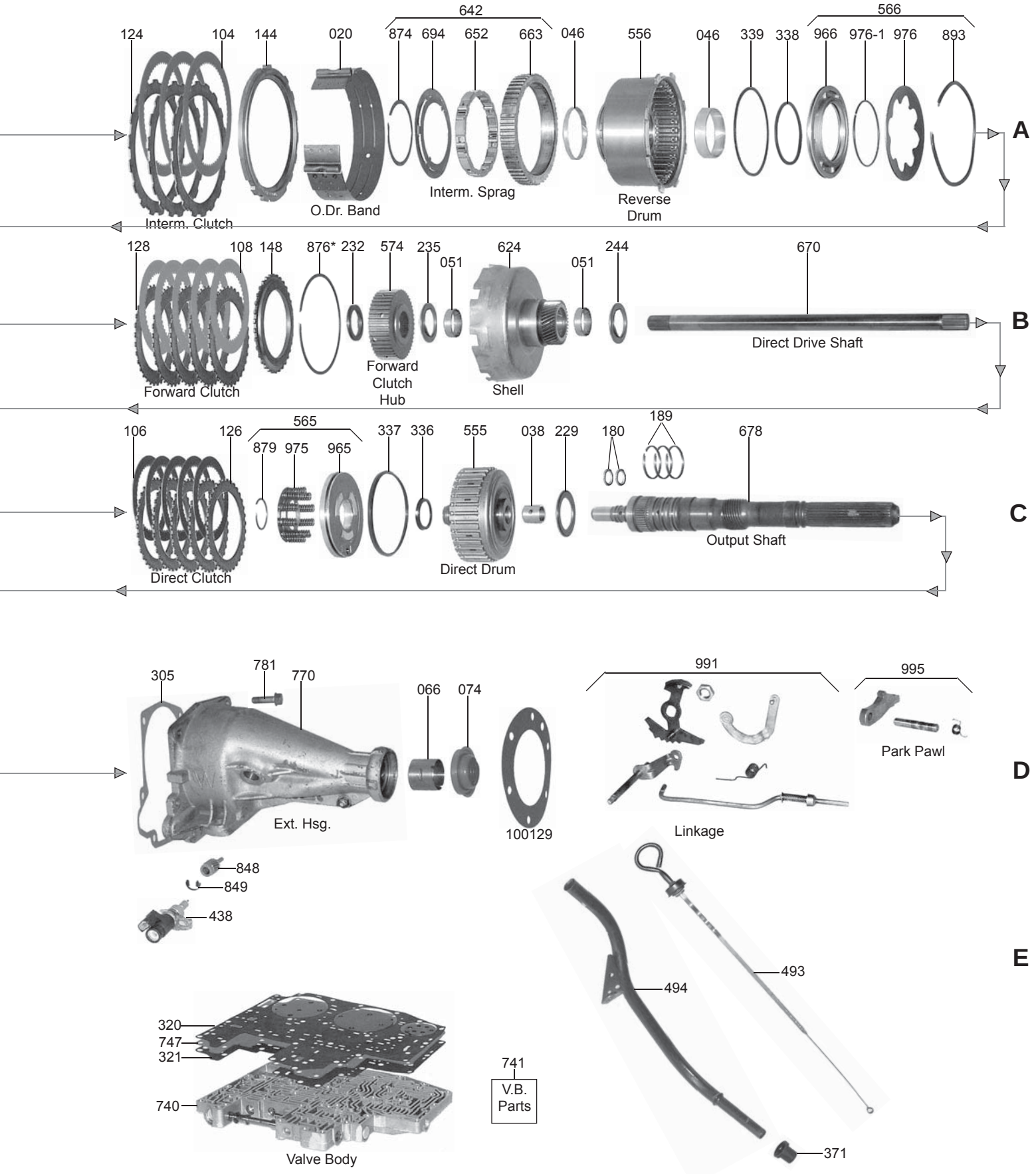

AODE/4R70W/E/4R75W/E

RWD 4 Speed

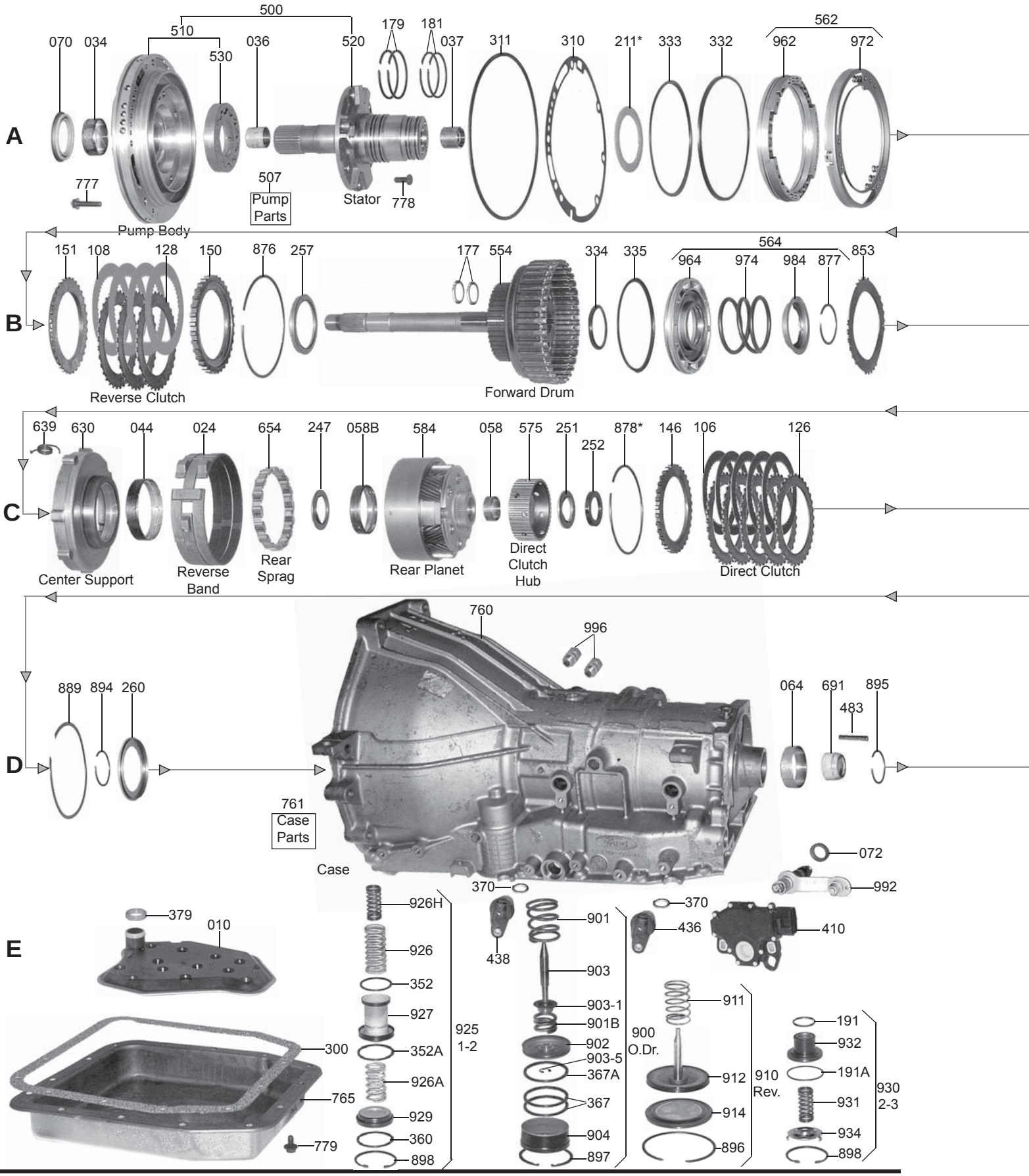

RWD 4 Speed

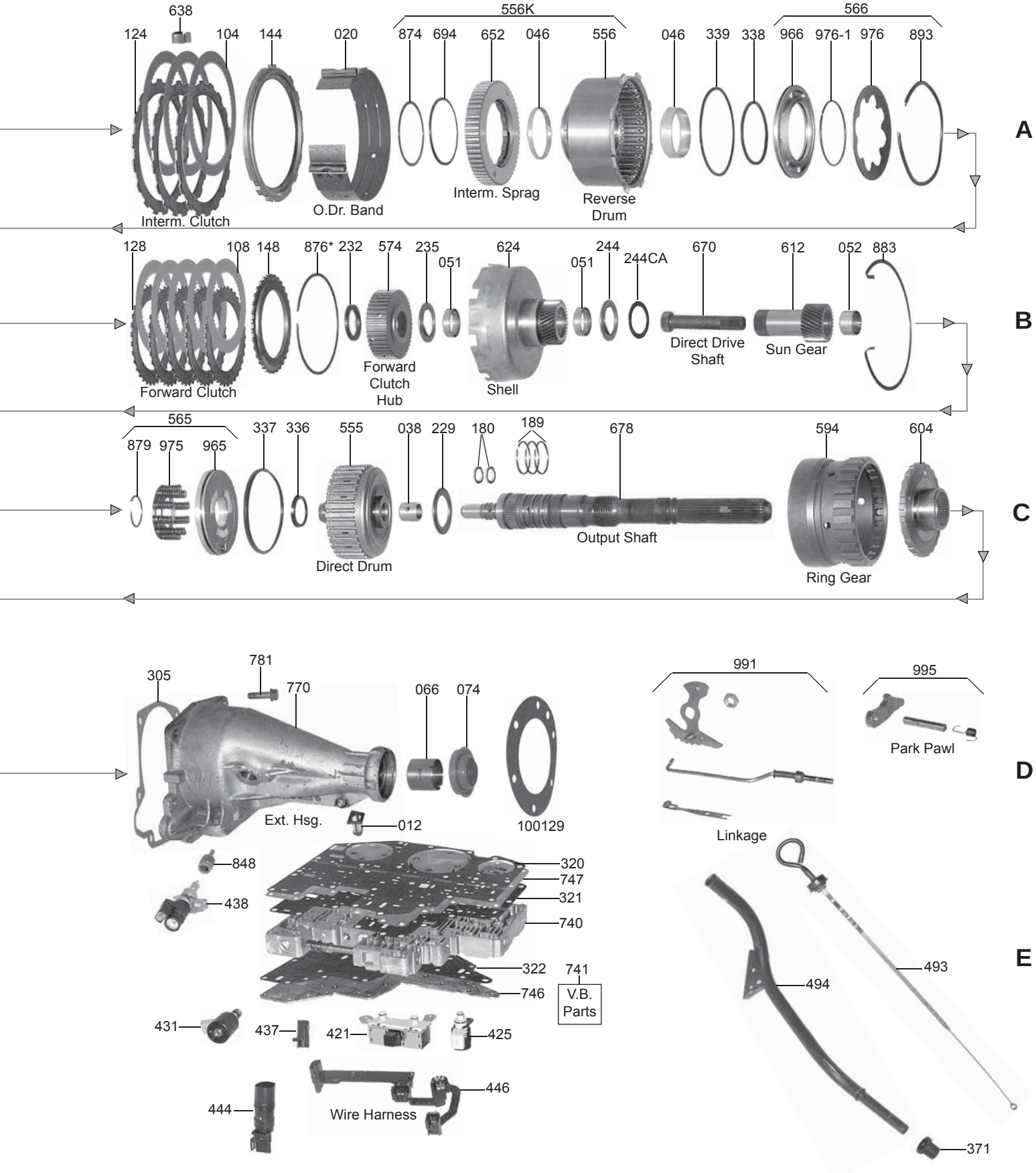
638
124
104
144
020
556K
874
694
652
046
556
046
339
338
566
966
976-1
976
893
A
Interm. Clutch
O.Dr. Band
Interm. Sprag
Reverse Drum
128
108
148
876*
232
574
235
051
624
051
244
244CA
670
612
052
883
B
Forward Clutch
Forward Clutch Hub
Shell
Direct Drive Shaft
Sun Gear
565
879
975
965
337
336
555
038
229
180
189
678
594
604
C
Direct Drum
Output Shaft
Ring Gear
305
781
770
066
074
D
Ext. Hsg.
012
100129
991
995
Park Pawl
Linkage
848
438
320
747
321
740
322
741
746
V.B. Parts
431
437
421
425
446
444
Wire Harness
E
493
494
371

AOD/AODE/4R70W/E/4R75W/E

ILL#	PART#	DESCRIPTION	QTY	REF #
		PAPER & RUBBER KIT		
	K76900-1	Paper & Rubber Kit, [AOD] (FIOD) 1980-93	1	
	K76900E-1	Paper & Rubber Kit, [AODE / 4R70W] 1992-95	1	
	K76900G-1	Paper & Rubber Kit, [4R70W] 1996-03	1	
		OVERHAUL KITS		
	K76900	Overhaul Kit, [AOD] 1980-93	1	
	K76900E	Overhaul Kit, [AODE / 4R70W] 1992-95	1	
	K76900G	Overhaul Kit, [4R70W] 1996-03	1	
	K76900K	Overhaul Kit, [4R70E / 4R75E] 2004-Up	1	
		MASTER L/STEEL KIT		
	DK7600-S	Master L/Steels Kit, [AOD] (FIOD) 1980-E83	1	
	DK7600A-S	Master L/Steels Kit, [AOD] (FIOD) L1983-93	1	
	DK7600E-S	Master L/Steels Kit, [AODE] 1992-95	1	
	DK7600F-S	Master L/Steels Kit, [4R70W] 1993-95	1	
	DK7600G-S	Master L/Steels Kit, [4R70W] 1996-03	1	
	DK7600K-S	Master L/Steels Kit, [4R70E / 4R75E] 2004-Up	1	
		MASTER W/STEEL KIT		
	DK7600	Master W/Steels Kit, [AOD] (FIOD) 1980-E83	1	
	DK7600A	Master W/Steels Kit, [AOD] L1983-93 (Cast Iron Reverse, Direct & Forward Drums)	1	
	DK7600B	Master W/Steels Kit, [AOD] 1990-93 (Stamped Steel Reverse, Direct & Forward Drums)	1	
	DK7600E	Master W/Steels Kit, [AODE] 1992-95	1	
	DK7600F	Master W/Steels Kit, [4R70W] 1993-95	1	
	DK7600G	Master W/Steels Kit, [4R70W] 1996-03	1	
	DK7600K	Master W/Steels Kit, [4R70E / 4R75E] 2004-Up	1	
		FILTER		
010	76422	Filter, [AOD] (2WD) 1980-93	1	E0AZ-7A098-A
010	76424	Filter, [AOD] (4x4) 1984-93	1	E4TP-7F003-A
010	76426	Filter, [AODE] (2WD) 1992-95	1	F2VY-7A098-AA
010	76420	Filter, [AODE / 4R70W] (4WD) 1994-95 (*Also [4R70W / E4R75W / E] (2WD & 4x4) 1996-Up	1	F6AZ-7A098-AA
		FILTER KIT		
	FK76422	Filter Kit, [AOD] (2WD) 1980-93	1	
	FK76424	Filter Kit, [AOD] (4x4) 1984-93	1	
	FK76426	Filter Kit, [AODE] (2WD) 1992-95	1	
	FK76420	Filter Kit, [AODE / 4R70W] (4x4) 1994-95 (*Also [4R70W / 4R75W / 4R70E / 4R75E] (2WD & 4x4) 1996-Up	1	
		MISC. FILTERS		
012	76714G	Screen, [4R70E / 4R75E] (Pump) (On Valve Body) 2004-Up	1	
	76423A	Screen, [AOD] (Governor)	1	E7AZ-E242-A
	76712	Screen, [AODE / 4R70W / 4R75W / 4R70E / 4R75E] (Solenoid Feed) (In Valve Body) 1992-Up	1	F2VY-7H187-A

AOD/AODE/4R70W/E/4R75W/E

		BANDS		
020	76320	Band, [AOD] (Overdrive Drum) (1.5" Wide) 1980-93	1	E0AZ-7F196-A
020	76320HD	Band, [AOD] (Overdrive Drum) (1.5" Wide) 1980-93 (Kevlar)	1	
020	76320A	Band, [AOD / AODE / 4R70W / 4R75W / 4R70E / 4R75E] (Overdrive Drum) (2" Wide) 1990-Up	1	F2TZ-7F196-A
020	RPS76320AHP	Band, [AOD / AODE / 4R70W / 4R75W / 4R70E / 4R75E] (Overdrive Drum) (2" Wide) 1992-Up (*Raybestos Pro Series)	1	
024	76520	Band, [AOD / AODE / 4R70W / 4R75W / 4R70E / 4R75E] (Reverse) 1980-Up	1	F0AZ-7D095-A
		BUSHINGS		
	K76905	Bushing Kit, [AOD] (With Cast Iron Drums) 1980-93	1	
	K76905A	Bushing Kit, [AODE] 1992-93	1	
	K76905B	Bushing Kit, [AODE / 4R70W / 4R75W / 4R70E / 4R75E] 1994-Up	1	
034	36002B	Bushing, [AOD / AODE / 4R70W / 4R75E / 4R70E / 4R75E] (Pump) (Babbit) (.760" Tall) 1980-Up	1	
034	76001	Bushing, [AOD / AODE / 4R70W / 4R75W / 4R70E / 4R75E] (Pump) (.702" Tall) 1980-Up (Bronze)	1	
036	36000A	Bushing, [AODE] (Stator) (Front) 1992-93	1	
036	36000B	Bushing, [AODE / 4R70W / 4R75W / 4R70E / 4R75E] (Stator) (Front) 1994-Up	1	
037	76000	Bushing, [AOD] (Stator) (Rear) 1980-93	1	
037	36000A	Bushing, [AODE] (Rear) 1992-93	1	
037	76000E	Bushing, [AODE / 4R70W / 4R70E / 4R75E] (Rear) (With Notch) 1994-Up	1	
038	76011	Bushing, [AOD] (Direct Clutch Drum) (With Cast Iron Drum) 1980-89	1	
038	76011A	Bushing, [AOD / AODE / 4R70W / 4R75W / 4R70E / 4R75E] (Direct Drum) (With Stamped Steel Drum) 1990-Up	1	
044	76022B	Bushing, [AOD / AODE / 4R70W / 4R75W / 4R70E / 4R75E] (Center Support) 1980-Up	1	
046	76006	Bushing, [AOD / AODE / 4R70W / 4R75W / 4R70E/4R75E] (Reverse Clutch Drum) (Rear) 1980-Up	1	
046	76002	Bushing, [AOD / AODE / 4R70W / 4R75W / 4R70E / 4R75E] (Reverse Clutch Drum) (Front) 1980-Up	1	
048	76007	Bushing, [AOD] (Forward Drum Shaft) 1980-93	1	
051	76010	Bushing, [AOD / AODE / 4R70W / 4R75W / 4R70E / 4R75E] (Reverse Sun Gear) (Shell) 1980-Up	2	
052	76003	Bushing, [AOD / AODE / 4R70W / 4R75W / 4R70E / 4R75E] (Forward Sun Gear) 1980-Up	1	
058	76012	Bushing, [AOD / AODE / 4R70W / 4R75W / 4R70E / 4R75E] (Planet) (Rear) (1.380"OD) 1980-Up	1	
058B	76013	Bushing, [AOD / AODE / 4R70W / 4R75W / 4R70E / 4R75E] (Planet) (Front) (2.770"OD) 1980-Up	1	
064	76005	Bushing, [AOD / AODE / 4R70W / 4R75W / 4R70E / 4R75E] (Case) 1980-Up	1	
064	76030	Bushing, [AOD / AODE] (Case) (Top Hat) (*Replaces Case Bushing) 1980-Up	1	
066	6014	Bushing, [AOD / AODE] (Extension Housing) (1.500"ID) (Babbit) 1980-94	1	
066	76014	Bushing, [4R70W / 4R75W / 4R70E / 4R75E] (Extension Housing) (1.606"ID) (Bronze) 1993-Up	1	
		METAL CLAD SEALS		
070	16601A	Seal, [AOD] (Front Without Flange)	1	C2AZ-7A248-A
070	16601F	Seal, [AOD] (Front Pump With Flange) (8.14mm / .320" Overall Thickness)	1	C3OP-7A248-A
070	16601E	Seal, [AODE / 4R70W / 4R75W / 4R70E / 4R75E] (Front Pump With Flange) (Ribbed) 1992-Up	1	
072	6507A	Seal, [AOD / AODE / 4R70W / 4R75W / 4R70E / 4R75E] (Linkage Shaft to Case) 1980-Up	1	D5AZ-7B498-A

AOD/AODE/4R70W/E/4R75W/E

	76511	Seal, [AOD] (Throttle Lever) 1980-93	1	E0AZ-7F337-A
074	8850B	Seal, [AOD / AODE] (Rear) (With Flange, Without Boot) 1980-94	1	
074	76509	Seal, [4R70W / 4R75W / 4R70E / 4R75E] (Rear) (With Short Boot) 1994-Up	1	
074	16695E	Seal, [AOD / AODE] (Rear) (With Flange, With Long Boot) 1980-94	1	
074	76509A	Seal, [4R70W / 4R75W / 4R70E / 4R75E] (Rear) (With Long Boot) 1994-Up	1	
074	16695ES	Seal, [AOD / AODE] (Rear) (With Flange, With Short Boot) 1980-94	1	
		FRICTION CLUTCH		
104	76604	Friction, [AOD / AODE] (Intermediate Clutch) (.080") 1980-95	3	E0AZ-7B164-D
104	76604A	Friction, [4R70W / 4R70E / 4R75W / 4R75E] (Intermediate Clutch) (.066") 1993-Up	3-4	
104	K76604HP	Friction Kit, [AOD / AODE / 4R70W] (Intermediate Clutch) (.080") 1980-97 (3-Hi-Performance Red)	1	
104	76604B	Friction, [4R70W / 4R75W / 4R70E / 4R75E] (Intermediate Clutch) (.067") (Radial) 1998-Up	4	
104	76604HP	Friction, [AOD / AODE] (Intermediate Clutch) (.080") (Hi-Performance Red) 1980-Up	3	
104	76604AHP	Friction, [AOD / AODE] (Intermediate Clutch) (.066") (Hi-Performance Red) 1992-Up	3-4	
106	76304	Friction, [AOD / AODE / 4R70W] (Direct Clutch) (.075") 1980-96	5-6	E0AZ-7B164-A
106	76304C	Friction, [AOD] (Direct Clutch) (.059") (Commercial) 1980-93	AR	
106	76304A	Friction, [4R70W / 4R75W / 4R70E / 4R75E] (Direct Clutch) (Hi Energy) (.068") 97-Up	5-6	
106	K76304HP	Friction Kit, [AOD] (Direct Clutch) (.059") (5-Hi-Performance Red) 1980-Up	1	
106	K76750	Friction/Steel Kit, [AOD / AODE] (Direct Clutch) (Cast Iron Drum) (Includes: (8) .059" Frictions, (10) .060" Steels, & Pressure Plate) 1980-Up	1	49750A
106	K76750A	Friction/Steel Kit, [AOD / AODE] (Direct Clutch) (Stamped Steel Drum) (Includes: (8) .059" Frictions, (8) .060" Steels, & Pressure Plate) L1989-Up	1	49754A
106	K76750HP	Friction/Steel Kit, [AOD / AODE] (Direct Clutch) (Cast Iron Drum) (Includes: (8) Red Frictions, (10) Kolene Steels, & Pressure Plate) 1980-Up	1	49750AHP
106	K76750AHP	Friction/Steel Kit, [AOD / AODE] (Direct Clutch) (Stamp Steel Drum) (Includes: (8) Red Frictions, (8) Kolene Steel, & Pressure Plate) L1989-Up	1	49754AHP
106	76304HP	Friction, [AOD / AODE] (Direct Clutch) (.075") (Hi-Performance Red) 1980-Up	5	
108	76504	Friction, [AOD] (Reverse Clutch) (.080") 1980-L83	4	E0AZ-7B164-B
108	76404	Friction, [AOD] (Forward) 1980-89 (*Also [AOD / AODE] (Reverse) (.061") (5.250"OD)	5-10	E0AZ-7B164-A
108	76404HP	Friction, [AOD] (Forward) 1980-89 (*Also [AOD / AODE] (Reverse) (.061") 1983-Up (Hi-Performance Red)	5-10	49740
108	76404AHP	Friction, [AOD] (Forward) 1990-Up (*Also [AOD / AODE] (Reverse) (.061") 1983-Up (Hi-Performance Red)	5-10	49740A
108	76404A	Friction, [AOD / AODE / 4R70W / 4R75W / 4R70E / 4R75E] (Forward Clutch) (Stamped Steel) (.061") (5.36"OD) 1990-Up	5	F2VP-7E311-A
	K76100	Friction Module, [AOD] 1980-E83	1	
	K76100A	Friction Module, [AOD] L1983-93	1	
	K76100E	Friction Module, [AODE] 1990-95	1	
	K76100F	Friction Module, [4R70W] 1993-Up	1	
		STEEL CLUTCH		
124	76605	Steel, [AOD / AODE / 4R70W / 4R75W / 4R70E / 4R75E] (Intermediate Clutch) (.069") 1980-Up	3-4	E0AZ-7B442-B1
124	76606	Steel, [AOD / AODE / 4R70W / 4R75W / 4R70E / 4R75E] (Intermediate Clutch) (.079") 1980-Up	AR	E0AZ-7B442-B2
124	76607	Steel, [AOD / AODE / 4R70W / 4R75W / 4R70E / 4R75E] (Intermediate Clutch) (.089") 1980-Up	AR	E0AZ-7B442-B3
124	76608	Steel, [AOD / AODE / 4R70W / 4R75W / 4R70E / 4R75E] (Intermediate Clutch) (.097") 1980-Up	AR	E0AZ-7B442-B4

126	76305	Steel, [AOD] (Direct Clutch) (.070") (Cast Drum) (28 Teeth) 1980-89	4	E0AZ-7B442-A
126	76305A	Steel, [AOD / AODE / 4R70W / 4R75W] (Direct Clutch) (.070") (Stamped Drum) (34 Teeth) 1990-Up	5-6	E9SZ-7B442-A
126	76305B	Steel, [4R70W / 4R75W / 4R70E / 4R75E] (Direct Clutch) (.079") (34 Teeth) 1996-Up (*Trucks)	5-6	
126	76305CA	Steel, [AOD / AODE / 4R70W / 4R75W / 4R70E / 4R75E] (Direct Clutch) (.059") (34 Teeth) 1990-Up	AR	
126	76305C	Steel, [AOD] (Direct Clutch) (.060") (28 Teeth) (Commercial) 1980-89	AR	
126	76305K	Steel, [AOD] (Direct Clutch) (.070") (28 Teeth) (Kolene) 1980-89	AR	
126	76305CAK	Steel, [AOD / AODE / 4R70W / 4R75W / 4R70E / 4R75E] (Direct Clutch) (.059") (34 Teeth) (Kolene) 1990-Up	AR	
126	K76305AK	Steel Kit, [AOD / AODE / 4R70W / 4R70E / 4R75E] (Direct Clutch) (.070") (Kolene) (Hi-Performance) 1990-Up	1	49715KUP6
128	6205	Steel, [AOD] (Forward & Reverse Clutch) (.068") (54 Teeth) 1980-89	8	C8AZ-7B442-A
128	6205K	Steel, [AOD] (Forward & Reverse Clutch) (.068") (54 Teeth) (Kolene) 1980-89	8	
128	76405	Steel, [AOD / AODE / 4R70W / 4R75W / 4R70E / 4R75E] (Forward Clutch) (.069") (34 Teeth) 1990-Up	5	F0SZ-7B442-A
128	76405K	Steel, [AOD / AODE / 4R70W / 4R75W / 4R70E / 4R75E] (Forward Clutch) (.069") (34 Teeth) (Kolene) 1990-Up	5	
128	76407	Steel, [AOD / AODE / 4R70W / 4R75W / 4R70E / 4R75E] (Reverse Clutch) (.068") (32 Teeth) 1990-Up	3-4	F2TZ-7B442-A
	K76110	Steel Module, [AOD] (With Cast Iron Drums) 1980-93	1	
	K76110E	Steel Module, [AODE] 1992-95	1	
	K76110F	Steel Module, [4R70W / 4R75W / 4R70E / 4R75E] 1994-Up	1	
		CLUTCH PRESSURE PLATES		
144	76307D	Pressure Plate, [AOD] (Intermediate Clutch) (.406") 1980-93	1	E0AZ-7B066-D
144	76307F	Pressure Plate, [AOD / AODE] (Intermediate Clutch) (.563") (3 Clutch) 1982-94	1	E0AZ-7B066-A
144	76307FA	Pressure Plate, [AODE / 4R70W / 4R75W / 4R70E / 4R75E] (Intermediate Clutch) (.258" - .260") 1994-Up	1	F3LY-7B066-BA
144	76307FB	Pressure Plate, [AODE / 4R70W / 4R75W / 4R70E / 4R75E] (Intermediate Clutch) (.239" - .240") 1994-Up	1	F7AZ-7B066-AA
146	76307E	Pressure Plate, [AOD] (Direct Clutch) (Cast Iron Drum) (.218") (28 Teeth) 1980-89	1	E0AZ-7B066-E
146	76307EA	Pressure Plate, [AOD / AODE / 4R70W / 4R75W / 4R70E] (Direct Clutch) (.218") (34 Teeth) (Stamp Steel Drum) 1990-Up	1	E9AZ-7B066-A
146	76307EF	Pressure Plate, [AOD / AODE / 4R70W / 4R70E / 4R75E] (Direct Clutch) (.239") (34 Teeth) 1997-Up	1	
146	76307EG	Pressure Plate, [AOD / AODE / 4R70W / 4R70E / 4R75E] (Direct Clutch) (.399") (34 Teeth) 1997-Up	1	
146	76307EX	Pressure Plate, [AOD] (Direct Clutch) (.128") (28 Teeth) (Commercial) 1980-89	1	
148	76307AA	Pressure Plate, [AOD] (Forward Clutch) 1980-83	1	E0AZ-7B066-C
148	76307C	Pressure Plate, [AOD] (Forward Clutch) (Cast Iron Drum) (.200") L1983-Up	1	
148	76307H	Pressure Plate, [AOD / AODE / 4R70W / 4R75W / 4R70E / 4R75E] (Forward Clutch) (.118) 1990-Up	1	F0SZ-7B066-B
150	76307C	Pressure Plate, [AOD] (Reverse Clutch) (54 Teeth) (Top) (.469") 1980-89	1	
150	76307CA	Pressure Plate, [AOD / AODE / 4R70W / 4R75W / 4R70E / 4R75E] (Reverse Clutch) (Top) (34 Teeth) (.200" at Outside Edge) (4 Clutch) 1990-Up	1	F2TZ-7B066-A
150	76307K	Pressure Plate, [AOD / AODE / 4R70W / 4R75W / 4R70E / 4R75E] (Reverse Clutch) (Top) (34 Teeth) (.325" at Outside Edge) (3 Clutch) 1990-Up	1	XL3Z-7B066-AA
151	76307B	Pressure Plate, [AOD] (Reverse Clutch) (54 Teeth) (Bottom) (Beveled) 1980-89	1	E0AZ-7B066-B
151	76307BA	Pressure Plate, [AOD / AODE / 4R70W / 4R75E / 4R70E 4R75E] (Reverse Clutch) (Bottom) (34 Teeth) (Beveled) 1990-Up	1	F2TZ-7B066-B
		VALVE BODY KITS		

AOD/AODE/4R70W/E/4R75W/E

	K76908S	Shift Correction Package, [AOD] 1980-93	1	Superior
	K76908	Shift Kit, [AOD] 1979-93	1	Transgo
	K76908SA	Shift Correction Package, [AODE / 4R70W] 1992-Up	1	Superior
	K76908E	Shift Kit, [AODE / 4R70W] 1992-07	1	Transgo
	KAODEV	Valve Body Kit, [AODE / 4R70W] (With Steel Boost Valve & Sleeve) 1991-04	1	Superior
	KAODV	Shift Correction Package, [AOD] (With Boost Valve & Sleeve) 1980-93	1	Superior
	K76908HPS	Shift Correction Package, [AOD] (Hi-Performance) 1980-93	1	Superior
	AOD-HP	Reprogramming Kit, [AOD] (Hi-Performance & Heavy Duty) 1983-93 (*Holds 1st / 2nd / 3rd to any RPM)	1	Transgo
	AODE-HD2	Reprogramming Kit, [AODE] (Hi-Performance)	1	Transgo
	AODE-3	Reprogramming Kit, [AODE] 1991-Up (Full Manual Control Stick Shift)	1	Transgo
		OIL SEALING RINGS		
	K76901	Ring Kit, [AOD] (With Teflon Direct Clutch Rings) 1980-93	1	
	K76901A	Ring Kit, [AOD] (With Metal Direct Clutch Rings) 1980-93	1	
	K76901E	Ring Kit, [AODE / 4R70W] 1992-03	1	
	K76901K	Ring Kit, [4R70W / 4R75W / 4R70E / 4R75E] 2004-Up	1	
177	76235T	Ring, [AODE / 4R70W / 4R75W / 4R70E / 4R75E] (Input Shaft) (1.130”OD) (Scarf Cut) (Teflon) 1992-Up	2	F2VY-7B497-A
177	76235S	Ring, [AODE / 4R70W / 4R70E / 4R75W / 4R75E] (Input Shaft) (1.130”OD) (Solid) (Teflon) 1992-Up	2	
179	76228	Ring, [AOD / AODE / 4R70W / 4R75W / 4R70E / 4R75E] (Stator) (Reverse Clutch Drum) (2.624”OD) (Metal) 1980-Up	2	E0AZ-7D020-A
179	76228T	Ring, [AOD / AODE / 4R70W / 4R75W / 4R70E / 4R75E] (Stator) (Reverse Clutch Drum) (2.624”OD) (Teflon) 1980-Up	2	
180	76229	Ring, [AOD / AODE / 4R70W] (Output Shaft) (Direct Clutch) (.914”OD) (Metal) 80-95	2	E3AZ-7F274-A
180	76229T	Ring, [AOD / AODE / 4R70W] (Output Shaft) (Direct Clutch) (.914”OD) (Teflon) (Scarf Cut) 1980-95	2	E3AZ-7F274-A
180	76229S	Ring, [4R70W / 4R75W / 4R70E / 4R75E] (Direct Clutch) 1996-Up (*Updated) (Teflon) (Solid)	2	
181	76227	Ring, [AOD] (Stator) (Forward Clutch) (2.374”OD) (Metal) 1980-93	2	E0AZ-7D019-A
181	76227A	Ring, [AODE / 4R70W] (Stator) (Forward Clutch) (2.374”OD) (Metal) (Hardened) 93-03	2	F4AZ-7D019-A
181	76227B	Ring, [4R70E / 4R75E] (Stator) (Forward Clutch) (2.374”OD) (Teflon) 2004-Up	2	
189	76230	Ring, [AOD / AODE / 4R70W / 4R75W / 4R70E / 4R75E] (Output Shaft to Case) (1.752”OD) (Cast Iron) 1980-Up	3-4	E0AZ-7F273-A
189	76234	Ring, [AOD / AODE / 4R70W / 4R75W / 4R70E / 4R75E] (Output Shaft to Case) (1.752”OD) (Seal Plated) 1980-Up	3-4	E6AZ-7F273-A
191	76231	Ring, [AOD] (2-3 Accumulator) (Upper) (1.223”OD) (Metal) 1980-Up	1	
191	76231T	Ring, [AOD / AODE] (2-3 Accumulator) (Upper) (1.223”OD) (Teflon) 1980-86	1	E0AZ--7F273-A
191	76232T	Ring, [AOD / AODE] (2-3 / 3-4 Accumulator) (Lower) (1.994”OD) (Teflon) (*Also 1-2 Lower) 1980-Up	2-3	E0AZ-7F249-A
192	76233T	Ring, [AOD] (3-4 Accumulator) (1.596”OD) (Teflon) 1980-Up (*Also [AODE] (1-2 Accumulator) (Upper)	1-2	E0AZ-7F248-A
		WASHERS & BEARINGS		
	K76907	Washer Kit, [AOD / AODE / 4R70W / 4R75W / 4R70E / 4R75E] (5-Pump Selective Only*) 1980-Up	1	
	K76906	Bearing Kit, [AOD] 1980-E92	1	Torrington
	K76906A	Bearing Kit, [AODE] 1992-Up	1	Torrington
	K76906B	Bearing Kit, [4R70W] 1993-03	1	Torrington
	K76906C	Bearing Kit, [4R70E / 4R75E] 2004-Up	1	Torrington
211	76409A	Washer, [AOD / AODE / 4R70W / 4R75W / 4R70E / 4R75E] (Stator) (.052”) (#1) (Green) 1980-Up	1	E0AZ-7D014-A
211	76409B	Washer, [AOD / AODE / 4R70W / 4R75W / 4R70E / 4R75E] (Stator) (.070”) (#2) (Yellow) 1980-Up	1	E0AZ-7D014-B

211	76409C	Washer, [AOD / AODE / 4R70W / 4R75W / 4R70E / 4R75E] (Stator) (.087") (#3) (Brown) 1980-Up	1	E0AZ-7D014-C
211	76409D	Washer, [AOD / AODE / 4R70W / 4R75W / 4R70E / 4R75E] (Stator) (.104") (#4) (Red) 1980-Up	1	E0AZ-7D014-D
211	76409E	Washer, [AOD / AODE / 4R70W / 4R75W / 4R70E / 4R75E] (Stator) (.121") (#5) (Blue) 1980-Up	1	E0AZ-7D014-E
229	76427	Bearing W/Race, [AOD] (Direct Drum) (Outer) (2-Pieces) 1980-90	1	E0AZ-7F240-A
229	76427A	Bearing W/Races, [AODE / 4R70W] (Direct Drum) (Outer) (3-Pieces) (Rear) (.135" Thick) (2.620"OD) 1991-03	1	F1AZ-FF240-A
229	76427B	Bearing W/Races, [4R70W / 4R75W / 4R75E] (Direct Drum) (Rear) (.135" Thick) (2.665"OD) 2003-Up (*Retro to 92)	1	3C3Z-7F240-AA
235	76425	Bearing W/Races, [AOD / AODE / 4R70W / 4R75W / 4R75E] (Sun Shell) (Front) (2.310"OD) 1980-Up	1-2	3L3Z-7C096-AA
232	36431A	Bearing W/Races, [AOD / AODE / 4R70W / 4R75W / 4R70E / 4R75E] (Forward Drum to Hub) 1980-Up	2	E9TZ-7D2234-A
244	76425	Bearing, [AOD / AODE] (Sun Shell) (Rear) 1980-95	1	E0AZ-7C096-A
244	76425A	Bearing W/Races, [4R70W] (Sun Shell) (Rear) (2.040"OD) (.169" Thick) 1992-03	1	F3LY-7F244-A
244	76425B	Bearing W/1 Race, [4R70W / 4R70E / 4R75W / 4R75E] (Sun Shell) (Rear) (.145" Thick) 2004-Up	1	3L3Z-7D234-AA
244	76425BR	Race, [4R70W / 4R70E / 4R75W / 4R75E] (Sun Shell) (Rear) (.058" Thick) (1.457"ID) 2004-Up (*Use With 76425B)	1	3L3Z-7D235-AA
247	76428	Bearing, [AOD / AODE / 4R70W] (Rear Planet) (Inside Planet) 1980-Up	1	E0AZ-7F243-A
247	76431	Washer, [AOD] (Rear Planet) (Bronze) (*Bearing Replacement) 1980-Up	1	
251	76428	Bearing, [AOD / AODE / 4R70W / 4R70E / 4R75E] (Direct Drum to Hub) (.225" Thick) 1980-Up	1-2	E0AZ-7F243-A
252	76429	Race, [AOD / AODE / 4R70W / 4R75W / 4R70E / 4R75E] (Direct Drum to Hub) 80-Up	1	F4AZ-7F237-A
257	76411	Washer, [AOD] (Reverse Drum to Forward Drum) 1980-84	1	E0AZ-7A166-A
257	76411A	Bearing, [AOD / AODE / 4R70W / 4R75W / 4R70E / 4R75E] (Reverse Drum to Forward Drum) 1983-Up	1	E1TZ-7A166-A
260	76430	Bearing W/Race, [AOD] (Rear Ring Gear Support to Case) 1980-94	1	E0AZ-7F242-A
260	76430B	Bearing W/Race, [AODE / 4R70W / 4R70E / 4R75E] (Rear Ring Gear Support to Case) (3.435"OD) 1994-Up	1	3L3Z-7F242-AA
		GASKETS & RUBBER COMPONENTS		
300	76500	Gasket, [AOD] (Pan) 1980-93 (Cork)	1	E0AZ-7A191-A
300	76500**D** or **F**	Gasket, [AOD] (Pan) 1980-93 (Fiber) **(D-Duraprene** or **F-Farpak)**	1	
300	76500A	Gasket, [AODE / 4R70W / 4R75W / 4R70E / 4R75E] (Pan) 1992-Up (Cork)	1	F2VY-7A191-A
300	76500A**D** or **F**	Gasket, [AODE / 4R70W / 4R75W / 4R70E / 4R75E] (Pan) 1992-Up (Fiber) **(D-Duraprene** or **F-Farpak)**	1	
300	76500E	Gasket, [AODE / 4R70W / 4R75W / 4R70E / 4R75E] (Pan) 1992-Up (Bonded Rubber)	1	
305	76527	Gasket, [AOD / AODE] (Extension Housing) 1980-95	1	E0AZ-7086-A
305	76527A	Gasket, [4R70W / 4R75W / 4R70E / 4R75E] (Extension Housing) (Silicone Beaded) 1996-8/17/2008	1	F6AZ-7086-A
305	76527B	Gasket, [4R70E / 4R75E] (Extension Housing) 8/18/2008-Up	1	
310	76501	Gasket, [AOD] (Pump) 1980-93	1	E3SZ-7A136-A
310	76501E	Gasket, [AODE / 4R70W / 4R75W / 4R70E / 4R75E] (Pump) 1992-Up	1	F2VY-7A136-A
311	76502	O-Ring, [AOD / AODE / 4R70W / 4R75W / 4R70E / 4R75E] (Pump) 1980-Up	1	E0AZ-7A248-A
320	76506W	Gasket, [AOD] (Valve Body) (Upper) (White) 1980-93	1	E0AZ-7C099-B
320	76506E	Gasket, [AODE / 4R70W] (Valve Body) (Upper) (Yellow) 1992-95	1	F2VY-7C155-A
320	76506F	Gasket, [4R70E / 4R75W / 4R70W / 4R75E] (Valve Body) (Upper) (Green) 1996-Up	1	F7AZ-7C155-AA
321	76507	Gasket, [AOD] (Valve Body to Plate) (Lower) (White) 1980-89	1	E9AZ-7D100-A
321	76507A	Gasket, [AOD] (Valve Body to Plate) (Lower) (Orange) 1990-93	1	F0AZ-7D100-A
321	76507E	Gasket, [AODE] (Valve Body to Plate) (Lower) (Green) 1992-95	1	F3LY-7D100-A
321	76507G	Gasket, [4R70W] (Valve Body to Plate) (Lower) (White Stripe) 1996-00	1	F7AZ-7D100-AA

AOD/AODE/4R70W/E/4R75W/E

321	76507F	Gasket, [4R70W / 4R75W / 4R70E / 4R75E] (Valve Body to Plate) (Lower) (Blue Stripe) 2001-Up	1	
322	76508	Gasket, [AODE] (Valve Body to Valve Body Cover Plate) (With Silicone Bead) 1992-95	1	F2VY-7H173-A
322	76508A	Gasket, [4R70W / 4R75W / 4R70E / 4R75E] (Valve Body to Cover) 1996-Up	1	F6AZ-7H173-A
326	76505	Gasket, [AOD] (Filter) 1980-93	1	E0AZ-7E062-A
333	76518	Lip Seal, [AOD / AODE / 4R70W] (Intermediate Clutch) (Inner) 1980-03	1	E0AZ-7F225-A
332	76519	Lip Seal, [AOD / AODE / 4R70W] (Intermediate Clutch) (Outer) 1980-03	1	E0AZ-7F224-A
334	76512	Lip Seal, [AOD / AODE /4R70W / 4R75W / 4R70E / 4R75E] (Forward Clutch) (Inner) 1980-Up	1	E0AZ-7C099-A
335	76513	Lip Seal, [AOD / AODE / 4R70W / 4R75W / 4R70E / 4R75E] (Forward Clutch) (Outer) 1980-Up	1	E0AZ-7A548-A
336	76514	Lip Seal, [AOD / AODE / 4R70W / 4R75W / 4R70E / 4R75E] (Direct Clutch) (Inner) 1980-Up	1	E0AZ-7C099-B
337	76515	Lip Seal, [AOD / AODE / 4R70W / 4R75W / 4R70E / 4R75E] (Direct Clutch) (Outer) 1980-Up	1	E0AZ-7A548-B
338	76516	Lathe Cut Seal, [AOD / AODE / 4R70W / 4R75W / 4R70E / 4R75E] (Reverse Clutch) (Inner) 1980-Up	1	E0AZ-7D404-A
339	76517	Lathe Cut Seal, [AOD /AODE / 4R70W/ 4R75W / 4R70E / 4R75E] (Reverse Clutch)(Outer) 1980-Up	1	E0AZ-7D403-A
352	76529	O-Ring, [AODE] (1-2 Accumulator) (Small) 1992-96	1	
352	76528	O-Ring, [AODE] (1-2 Accumulator) (Large) 1992-96	1	
354	13322	O-Ring, [AOD] (3-4 Accumulator Cover) 1980-92 (*Also Fits [AODE] 1-2 Accumulator Cover) 1992-96	1-2	E0AZ-7F294-A
360	76510	O-Ring, [AODE] (1-2 Accumulator Cover) 1992-96	1	
367	76524	Lathe Cut Seal, [AOD / AODE / 4R70W / 4R75W / 4R70E / 4R75E] (Overdrive Servo Cover) 1980-Up	2	E0AZ-7D026-A
367A	76523	O-Ring, [AOD] (Overdrive Servo Piston) (1.937") (Piston Stamped "C") 1980-93	1	E0AZ-7D024-A
367A	76522	O-Ring, [AOD] (Overdrive Servo Piston) (2.250") (Piston Stamped "B") 1980-93	1	E0AZ-7D024-B
367A	76525	O-Ring, [AOD] (Overdrive Servo Piston) (2.437") (Piston Stamped "A") 1989-93	1	E9SZ-7D024-A
371	3291	O-Ring, [AOD / AODE / 4R70W] (Filler Tube) 1980-Up	1	6264902
	3096	O-Ring, [AOD / AODE / 4R70W] (Output Shaft to Yoke) 1980-Up	1	
377	76521	O-Ring, [AOD] (Neutral Safety Switch) 1980-93	1	87009-S100
	13327	O-Ring, [AOD / AODE / 4R70W / 4R70E / 4R75W / 4R75E] (Cooler Line) (Viton) (Push-in Type) (5/16" Line)	1	Teckpak
379	76547A	Boot, [AOD] (Filter to Case) 1980-93	1	
379	96503A	Seal, [AODE / 4R70W] (Filter to Case) 1992-Up	1	
		TECHNICAL MANUALS		
	TMAOD	Technical Manual, [AOD] 1980-93	1	ATSG
	TMAODE	Technical Manual, [AODE] 1992-Up	1	ATSG
	TM4R70W	Technical Manual, [4R70W] (Update Hand Book)	1	ATSG
		ELECTRICAL COMPONENTS		
410	56991A	Switch, [AOD] (Neutral Safety) (4-Pin) 1980-84	1	D6RY-7A247-B
410	56991	Switch, [AOD] (Neutral Safety) (5-Pin) 1985-93	1	FOVY-7A247-A
410	76991	Switch, [AODE] (MLPS / Neutral Safety) (8-Pin) 1992-97	1	F5AZ-7A247-A
410	76991B	Switch, [4R70W] (MLPS / Neutral Safety) (11 or 12-Pin) 1997-03 (*Except Crown Victoria)	1	F7LZ-7F293-AB
410	76991A	Switch, [4R70W] (MLPS / Neutral Safety) (8-Pin, Analog) 1995-10/97 (*Crown Victoria)	1	F5VY-7F293-AA
410	76991C	Switch, [4R70W] (MLPS / Neutral Safety) (11 or 12-Pin, Digital) 10/1997-Up (*Crown Victoria / Town Car)	1	F8AZ-7F293-AA
	36955WH	Repair Harness, [AODE / 4R70W] (MLPS) (With 8-Pin Connectors) 1992-98	1	
	36955AWH	Repair Harness, [4R70W] (MLPS) (With 11 or 12-Connectors) 1997-Up	1	

	MSAODE	Solenoid Master Kit, [AODE] 1992-E1995	1	Teckpak
	MS-AODEA	Solenoid Master Kit, [AODE] L1995-97	1	Teckpak
421	76919U	Solenoid, [AODE / 4R70W] (Shift) (Dual Pack) 1992-97	1	Teckpak
421	76919R	Solenoid, [AODE / 4R70W] (Shift) (Dual Pack) 1992-97	1	Rostra
421	76919	Solenoid, [AODE / 4R70W] (Shift) (Dual Pack) 1992-97 (OEM)	1	F7AZ-7G484-B
421	76925	Solenoid, [4R70W / 4R75W / 4R70E / 4R75E] (Shift) (Dual) 1998-08	1	F8AZ-7G484-AB
421	76925A	Solenoid, [4R70E / 4R75E] (Shift) (Dual) 2009-Up (Soft Wire)	1	
425	76918U	Solenoid, [AODE / 4R70W] (Lock-Up) (TCC) (Solenoid) 1992-E1995	1	Teckpak
425	76918R	Solenoid, [AODE / 4R70W] (Lock-Up) (TCC) (Solenoid) 1992-E1995	1	Rostra
425	76918	Solenoid, [AODE / 4R70W] (Lock-Up) (TCC) (PWM) (Black Connector) (OEM) 92-E95	1	F2VP-7G136-AC
425	76921U	Solenoid, [AODE / 4R70W] (Lock-Up) (TCC) (PWM) (White Connector) L1995-97	1	Teckpak
425	76921R	Solenoid, [AODE / 4R70W] (Lock-Up) (TCC) (PWM) (White Connector) L1995-97	1	Rostra
425	76921	Solenoid, [AODE / 4R70W] (Lock-Up) (TCC) (PWM) (White Connector) L1995-97 (OEM)	1	F5AZ-7G136-A
425	76922	Solenoid, [4R70W / 4R75W / 4R70E / 4R75E] (Lock-Up) (TCC) 1998-08	1	F8AZ-7G136-AA
425	76922A	Solenoid, [4R70E / 4R70E / 4R75E] (Lock-Up) (TCC) 2009-Up (Soft Wire)	1	
431	76923	Solenoid, [AODE / 4R70W] (EPC) (Electronic Pressure Control) 1992-97	1	F6AZ-7G383-AA
431	76926	Solenoid, [4R70W / 4R75W] (EPC) (Electronic Pressure Control) (Green or Red Connector) 1998-00	1	F8AZ-7G383-AA
431	76926A	Solenoid, [4R70W / 4R70E / 4R75W / 4R75E] (EPC) (Electronic Pressure Control) (Tan or Yellow Connector) 2001-04	1	XL3Z-7G383-AB
431	76926B	Solenoid, [4R70E / 4R75E] (EPC) (Electronic Pressure Control) 2005-08	1	5C2Z-7G383-AB
431	76926C	Solenoid, [4R70E / 4R75E] (EPC) (Electronic Pressure Control) 2009-Up	1	9L3P-76383-A
436	76985	Sensor, [AODE / 4R70W] (Output Speed) (With (2) O-Rings) 1992-00	1	F4AZ-7H103-A
436	76985A	Sensor, [4R70W / 4R75W] (Output Speed) (With (1) O-Ring) 2001-03	1	XR3Z-7H103-AA
436	76985B	Sensor, [4R70E / 4R75E] (Output Speed) (.100” Shorter) 2004-Up	1	
437	96956	Sensor, [AODE / 4R70W] (Transmission Oil Temperature) 1992-97 & 2009-Up	1	F1DZ-7H141-A
438	36951	Housing, [AODE / 4R70W] (Driven Speed-O) (Electric) (With VSS Sensor) 1992-Up	1	
438	96951A	Housing, [AOD / AODE] (With VSS Sensor) (2-Pin Connector) (*Uses a Cable) 84-Up	1	
438	76987	Sensor, [4R70E / 4R75E] (Turbine Shaft Speed) (With 1 / O-Ring) 2004-Up	1	3L3Z-7M101-AA
444	76986B	Connector, [4R70W / 4R75W / 4R70E / 4R75E] (Case Hard Wire) 1998-Up	1	F8AZ-7G276-AA
445	96968R	Repair Kit, [4R70W] (External Wire Harness) (10-PIN) 1998-Up	1	Rostra
446	76986	Wire Harness, [AODE / 4R70W] (Internal) (With 9-Pin Connector) 1992-97	1	F2VY-7G276-A
446	76986A	Wire Harness, [4R70W / 4R70E / 4R75W] (Internal) (Black Plastic Enclosed Circut Board) (With Connectors) 1998-08	1	F8AZ-7G276-BA
446	76986	Wire Harness, [4R70E / 4R75E] (Internal) (Soft Wire) 2009-Up	1	
	96968	Repair Kit, [AODE / 4R70W] (Output Speed Sensor) 1992-00 (*Also [AODE / 4R70W] (Repair Harness) (VSS) 1992-Up	1	
	76985AWH	Repair Kit, [4R70E / 4R70W / 4R75E] (Output Speed Sensor) 2001-Up	1	
		MISC. COMPONENTS		
	30126	Union, (5/16”)	1	
	26710	Grommet, [ATX] (Linkage Small)	1	D4AZ-7341-A
	26712	Grommet, [ATX] (Linkage Medium)	1	
	26711	Grommet, [ATX] (Linkage Large)	1	
	26713A	Bushing, [AOD] (Carburator-End of T.V. Rod) (*Steel Replacement Bushing)	1	F3SZ-7H303-B
	26713A-3	Bushing, [AOD] (Carburator-End of T.V. Rod) (*Steel Replacement Bushing) (3 Per Pack)	1	
	26713C	Grommet, [AOD] (Passing Gear Grommet) (Narrow Groove) (Green)	1	E0AZ-7F330-A
	26713B	Grommet, [AOD] (Passing Gear Grommet) (Wide Groove) (Black)	1	
	26713	Grommet, [AOD] (Passing Gear Grommet) (Narrow Groove) (Yellow)	1	

AOD/AODE/4R70W/E/4R75W/E

	30131	E-Clips, [AOD] (Linkage)	1	
	K31292	Cooler Line Repair Kit, [AOD]	1	Teckpak
	31289C	Retaining Clip, [AOD / AODE / 4R70W] (Cooler Line Fitting) (Plastic, Push-In Type) (Ford)	1	Teckpak
	KT31289	Kit, O-Ring Installation Cooler Line, (Ford)	1	Teckpak
	AS1-01K	Detent Cable End, [AOD] (Teardrop Style Connector) (OE Style) (No Slot) **(*Cable Must Be Crimped)**	1	Sonnax
		HARD PARTS		
500	76200	Pump, [AOD] 1980-93	1	
500	76200A	Pump, [AODE] 1992-94 (.568" Pump Gears) (*Can Use 76200C)	1	
500	76200B	Pump, [4R70W] 1993-94 (*Can Use 76200C)	1	
500	76200C	Pump, [AODE / 4R70W] (.608" Pump Gears) (*Uses Aluminum Intermediate Piston) 1995-03	1	
500	76200K	Pump, [4R70E / 4R75E] (*Uses Bonded Intermediate Piston) 2004-Up	1	3L3Z-7A103-AA
510	76203	Pump Body, [AOD] (Cast Iron) 1980-93	1	E0AZ-7A103-A
510	76203A	Pump Body, [AODE] (Aluminum) 1992-94 (.568" Gears) (*Can Use 76203C)	1	F2AZ-7A103-A
510	76203B	Pump Body, [4R70W] 1993-Up (*Can Use 76203C)	1	
510	76203C	Pump Body, [AODE / 4R70W] (Aluminum) (.608" Gears) (*Uses Aluminum Intermediate Piston) 1995-03	1	
510	76203K	Pump Body, [4R70E / 4R75E] (*Uses Bonded Intermediate Piston) 2004-Up	1	
520	76204	Stator, [AOD] (Pump) 1980-93	1	E0AZ-7A108-A
520	76204A	Stator, [AODE] (Pump) 1992-94 (*Can Use 76204C)	1	F4AZ-7A108-A
520	76204B	Stator, [4R70W] (Pump) 1993-94	1	
520	76204C	Stator, [4R70W] (Pump) (*Uses Metal Rings #181) 1995-03	1	
520	76204K	Stator, [4R70E / 4R75E] (Pump) (*Uses Teflon Rings #181) 2004-Up	1	3L3Z-7A108-AA
		PUMP COMPONENTS		
507	76204-01	Stator Support Sleeve, [AOD/ AODE / 4R70W] (Prevents Converter Release Leakage)	1	Sonnax
530	K36201	Gear Set, [AOD] (Pump) 1980-93	1	C6AP-7C010-B
530	K36201A	Gear Set, [AODE] (Pump) (.570" Thick) 1992-Up	1	
530	K36201B	Gear Set, [AODE / 4R70W / 4R75W / 4R70E / 4R75E] (Pump) (.609" Thick) 1995-Up	1	
		HARD PARTS (Continued)		
554	76879	Drum, [AOD] (Forward W/ Hollow Input Shaft) (5 Clutch) (Cast Iron) 1980-93 (Input Shaft Has Bushing In Front)	1	E4AZ-7F207-A
554	76878A	Drum, [AOD] (Forward W/ Hollow Input Shaft) (5 Clutch) (Stamp Steel) 1989-93 (Input Shaft Has Bushing In Front)	1	F0SZ-7F207-A
554	76879A	Drum, [AOD] (Forward W/ Hollow Input Shaft) (4 Clutch) (Cast Iron) 1980-93 (Input Shaft Has Bushing In Front)	1	
554	76878B	Drum, [AODE / 4R70W / 4R75W] (Forward W/ Solid Shaft) (5 Clutch) (Stamped Steel) 1992-95	1	E4AZ-7F207-B
554	76878D	Drum, [4R70W / 4R75W / 4R70E / 4R75E] (Forward With Solid Shaft) (5 Clutch) (Stamped Steel) 1996-Up	1	
555	76880A	Drum, [AOD] (Direct) (4 Clutch) (Cast Iron) 1980-93	1	
555	76880B	Drum, [AOD] (Direct) (5 Clutch) (Cast Iron) 1980-93	1	F2AZ-7F283-B
555	76880	Drum, [AOD] (Direct) (6 Clutch) (Cast Iron) 1980-93	1	
555	76881B	Drum, [AODE / 4R70W / 4R70E / 4R75W / 4R75E] (Direct) (6 Clutch) (Stamped Steel) 1989-Up	1	
555	76881	Drum Kit, [AOD / AODE / 4R70W / 4R75W / 4R70E / 4R75E] (Direct) (6 Clutch) (Stamped Steel) 1989-Up (Contains: Drum, Piston Kit, Frictions, Steels & Pressure Plate)	1	F2AZ-7F283-A

556	76876	Drum, [AOD] (Reverse Without Sprag) (4 Clutch) (*Uses a Washer # 257) (Cast Iron) 1980-E83	1	E0WY-7D044-B
556	K76876	Drum, [AOD] (Reverse With Sprag) (4 Clutch) (*Uses a Washer # 257) (Cast Iron) 1980-E83	1	
556	76876A	Drum, [AOD] (Reverse Without Sprag) (4-Clutch) (*Uses Bearing # 257) (Cast Iron) L1983-93	1	E2AZ-7D044-B
556	K76876A	Drum, [AOD] (Reverse With Sprag) (4 Clutch) (*Uses Bearing # 257) (Cast Iron) L1983-93	1	
556	76877	Drum, [AOD] (Reverse Without Sprag) (3 Clutch) (*Uses Washer # 257) (Cast Iron) 1980-E83	1	E2AZ-7D044-A
556	K76877	Drum, [AOD] (Reverse With Sprag) (3 Clutch) (*Uses Washer # 257) (Cast Iron) 1980-E83	1	
556	76877A	Drum, [AOD] (Reverse Without Sprag) (3 Clutch) (*Uses Bearing # 257) (Cast Iron) L1983-93	1	E5TZ-7D044-C
556	K76877A	Drum, [AOD] (Reverse With Sprag) (3 Clutch) (*Uses Bearing # 257) (Cast Iron) L1983-93	1	
556	76877C	Drum, [AODE] (Reverse Without 7-Roller Sprag) (4 Clutch) (Stamped Steel) 1992-95	1	F4AZ-7D044-A
556	K76877C	Drum, [AODE] (Reverse With 7-Roller Sprag) (4 Clutch) (Stamped Steel) 1992-95	1	
556	76877D	Drum, [4R70W] (Reverse Without 14-Roller Sprag) (4 Clutch) (Stamped Steel) 95-97	1	F3LY-7D044-A
556	K76877D	Drum, [4R70W] (Reverse With 14-Roller Sprag) (4 Clutch) (Stamped Steel) 1995-97	1	
556	76877E	Drum, [4R70W / 4R70E / 4R75W / 4R75E] (Reverse Without Mechanical Diode Sprag) (3 or 4 Clutch According to Pressure Plate Used) (Stamped Steel) (14-Spline) 1998-Up	1	F8AZ-7D044-AA
556	K76877E	Drum, [4R70W / 4R75W / 4R70E / 4R75E] (Reverse With Mechanical Diode Sprag) (3 or 4 Clutch According to Pressure Plate Used) (Stamped Steel) (14-Spline)	1	
574	76864	Clutch Hub, [AOD] (Forward Clutch) 1980-93	1	E0AZ-7B067-A
574	76864A	Clutch Hub, [AODE / 4R70W / 4R75W / 4R70E / 4R75E] (Forward Clutch) 1992-Up	1	F2AZ-7B067-A
575	76868E	Clutch Hub, [AOD] (Direct Clutch) E1980	1	
575	76868	Clutch Hub, [AOD / AODE / 4R70W / 4R75W / 4R70E / 4R75E] (Direct Clutch) (Cast # AB) 1981-Up	1	E0AZ-7F236-B
	K76883B	Planet Kit, [4R70W] 1995-03 (Contains: 624, 244, 612, 584, 594)	1	
	K76883D	Planet Kit, [4R70E / 4R75E] 2004-Up (Contains: 624, 244, 612, 584, 594)	1	
584	76883	Planet, [AOD] 1980-82 (.567" Spline Height)	1	
584	76883A	Planet, [AODE] (Top Cover Is 4.750"OD) 1993-Up	1	E6AZ-7A398-A
584	76883B	Planet, [4R70W] (Top Cover Is 4.845"OD & Rivited on) (25 Teeth on Long Gears) 1995-03	1	F2AZ-7A398-A
584	76883D	Planet, [4R70E / 4R75E] (Top Cover is 5.115"OD & is Welded on) 2004-Up	1	
594	76874	Ring Gear, [AOD] (Planet) (72 Teeth No Holes) 1980-83	1	E0AZ-7A153-A
594	76874A	Ring Gear, [AODE] (Planet) (72 Teeth With Holes) 1992-95	1	F2AZ-7A153-A
594	76874B	Ring Gear, [AODE / 4R70W] (88 Teeth With Sensor Holes) (Park Lugs 15/16" Long) 1994-03	1	F3AZ-7A153-A
594	76874D	Ring Gear, [4R70W / 4R70E / 4R75W / 4R75E] (88 Teeth No Holes) (Park Lugs 1-5/8" Long) 2004-Up	1	3L3Z-7A233-BA
604	76866	Hub, [AOD] (Ring Gear) (5.380"OD) (2-Piece Bearing #229 Has 1-Race) 1980-92	1	E0AP-7D164-A
604	76866A	Hub, [AODE] (Ring Gear) (5.380"OD) (3-Piece Bearing # 229 Has 2-Races) 1992-95	1	
604	76866B	Hub, [AODE / 4R70W / 4R75W / 4R70E] (Ring Gear) (5.160"OD) 1994-Up	1	F3LY-7D164-B
612	76872	Sun Gear, [AOD / AODE] (Forward) (30 Teeth) 1980-95	1	E0AZ-7A399-A
612	76872A	Sun Gear, [4R70W / 4R75W] (Forward) (31 Teeth 1.177 Tall) 1994-03	1	F3LY-7A399-A
612	76872D	Sun Gear, [4R70E / 4R75E] (Forward) (31 Teeth 1.167 Tall With ID Groove) 2004-Up	1	
624	76870	Shell W/Sun Gear, [AOD] (36 Teeth 4-3/8" Tall) (*Use With Cast Iron Reverse Drum) 1980-93	1	E0AZ-7A019-A
624	76870A	Shell W/Sun Gear, [AOD / AODE] (36 Teeth 4-1/8" Tall) (*Use With Stamped Steel Reverse Drum) 1989-95	1	F2AZ-7A019-A
624	76870C	Shell W/Sun Gear, [4R70W] (38 Teeth) 1992-03	1	

624	76870D	Shell W/Sun Gear, [4R70E / 4R75E] (38 Teeth) 2004-Up (Non Ferrous Metal) (Non Magnetic) (*Without Rivets Replaces Shell With Rivets)	1	
630	76993	Center Support, [AOD / AODE / 4R70W] (With 6-Outer Lugs) 1980-03	1	E0AZ-7A130-A
630	76993D	Center Support, [4R70E / 4R75E] (With 5-Outer Lugs) 2004-Up	1	
638	76871	Anti-Rattle Clip, [4R70W] (Intermediate Clutch) 2000-Up	1	
639	76813	Spring, [AOD / AODE / 4R70W] (Anti-Clunk) (Round Type) 1980-03	1	Teckpak
639	76813D	Spring, [4R70W / 4R75W / 4R70E / 4R75E] (Anti-Clunk) (*Horse Shoe Type) 2004-Up	1	2L3Z-7F277-AA
		SPRAGS & ONE WAY CLUTCHES		
652	76239	Sprag, [AOD / AODE] (Intermediate) (7-Roller) (Tan) 1980-94	1	E0AZ-7A089-A
652	76239E	Sprag, [4R70W] (Intermediate) (14-Roller) 1995-97	1	F7LY-7A089-AA
652	76239A	Sprag, [4R70W] (Intermediate) (7-Roller) (Green) 1995-97	1	
652	76239F	Mechanical Diode, [4R70W / 4R75W / 4R70E / 4R75E] (Intermediate) (14-Inner Splines) 1998-Up	1	F8AZ-7A089-AA
654	6239G	Sprag, [AOD / AODE / 4R70W / 4R75W / 4R70E / 4R75E] (Rear) 1980-Up	1	930681
663	76865	Outer Race, [AOD / AODE / 4R70W] (Intermediate Sprag) (7-Roller) 1980-97	1	E0AZ-7F221-A
663	K76865	Outer Race Kit, [AOD / AODE] (Intermediate Sprag) (7-Roller) 1980-95 (Contains: # 663, 694, 874)	1	
663	76865A	Outer Race, [4R70W] (Intermediate Sprag) (14-Roller) 1995-97	1	F3LY-7F221-A
663	K76865A	Outer Race Kit, [4R70W] (Intermediate Sprag) (14-Roller) (Contains: # 663, 694, 874) 1995-97	1	
		HARD PARTS (Continued)		
670	76811	Shaft, [AOD] (Direct Drive) (Input Shaft) 1980-93	1	E9SZ-7F208-A
670	76811A	Shaft, [AODE / 4R70W / 4R75W / 4R70E / 4R75E] (Direct Drive) 1992-Up	1	F8AZ-7F351-AA
678	76895A	Output Shaft, [AOD] (16” Long) (7 Teeth Speed-O With 3-Governor Oil Holes) 1980-87	1	E8VY-7060-A
678	76895L	Output Shaft, [AOD] (16” Long) (7 Teeth Speed-O With 4-Governor Oil Holes) 1988-93	1	
678	76895G	Output Shaft, [AODE / 4R70W] (16” Long) (7 Teeth Speed-O With 2-Governor Oil Holes) 1992-03	1	
678	76895ZA	Output Shaft, [4R70E / 4R75E] (2WD) (16”) (No Speed-O) (With 2-Oil Holes) 2004-Up	1	
678	76895M	Output Shaft, [AOD] (16” Long) (8 Teeth Speed-O With 3-Governor Oil Holes) 1980-87	1	E0VY-7D060-A
678	76895P	Output Shaft, [AOD] (16” Long) (8 Teeth Speed-O With 4-Governor Oil Holes) 1988-93	1	
678	76895Y	Output Shaft, [AODE] (16” Long) (8 Teeth Speed-O With 2-Governor Oil Holes) 92-Up	1	
678	76895N	Output Shaft, [AOD] (16” Long) (9 Teeth Speed-O With 3-Governor Oil Holes) 1980-87	1	E1TZ-7060-A
678	76895K	Output Shaft, [AOD] (16” Long) (9 Teeth Speed-O With 4-Governor Oil Holes) 1988-93	1	
678	76895S	Output Shaft, [AOD] (15” Long) (8 Teeth Speed-O With 3-Governor Oil Holes) 1980-87	1	E8AZ-7060-A
678	76895J	Output Shaft, [AOD] (15” Long) (8 Teeth Speed-O With 4-Governor Oil Holes) 1988-93	1	
678	76895JA	Output Shaft, [AODE / 4R70W] (15” Long) (8 Teeth Speed-O With 2-Governor Oil Holes)	1	
678	76895T	Output Shaft, [AOD] (15” Long) (7 Teeth Speed-O With 3-Governor Oil Holes) 1980-87	1	E2AZ-7060-A
678	76895H	Output Shaft, [AOD] (15” Long) (7 Teeth Speed-O With 4-Governor Oil Holes) 1988-93	1	
678	76895SA	Output Shaft, [AODE / 4R70W] (15” Long) (7 Teeth Speed-O With 2-Governor Oil Holes) 1992-03	1	
678	76895W	Output Shaft, [AOD] (15” Long) (9 Teeth Speed-O With 3-Governor Oil Holes) 1980-87	1	
678	76895ZB	Output Shaft, [4R70E / 4R75E] (2WD) (15” Long) (No Speed-O With 2-Oil Holes) 2004-Up	1	
678	76895V	Output Shaft, [AOD] (4x4) (11-1/2” Long) (With 3-Governor Oil Holes) 1980-87	1	
678	76895D	Output Shaft, [AOD] (4x4) (11-1/2” Long) (With 4-Governor Oil Holes) 1988-93	1	
678	76895E	Output Shaft, [AODE / 4R70W / 4R75W / 4R70E / 4R75E] (4x4) (11-1/2” Long) (With 2-Governor Oil Holes) 1992-Up	1	
680	76615A	Governor, [AOD] (With Weight) 1980-93	1	

	T-1695	Tool, [AOD] (Governor Bore Case Sleeve)	1	
	76040A	Replacement Sleeve, [AOD] (Governor Bore Case) **(*Use With T-1695)** (Tall Sleeve)	1	
	76040AE	Replacement Sleeve, [AODE] (Governor Bore Case) **(*Use With T-1695)** (Short Sleeve)	1	
	AOD-HI-REV	High Reverse Kit, [AOD] (Governor Kit) 1979-Up	1	Transgo
	76822	Spring, [AOD] (Governor) 1980-93	1	
691	76030SL	Sleeve, [AODE] (Output Shaft Sleeve) 1993-Up	1	
694	76554	Retainer, [AOD] (Intermediate Sprag) (2-Square Tabs) 1980-92 (Cast Iron Drum)	1	
874	76554R	Snap Ring, (*For Retainer 76554A), [AOD] (Intermediate Sprag) (2-Square Tabs) 1980-92	1	391267-S
694	76554A	Retainer, [AODE / 4R70W / 4R75W] (Intermediate Sprag) (2-Round Tabs) 1992-Up	1	F3AZ-7D191-A
		VALVE BODIES (REBUILT)		
470	FD-3340	Valve Body, [AOD] (With 4th Accumulator Hole) 1980-87	1	
470	FD-3341	Valve Body, [AOD] (Without 4th Accumulator Hole) 1988-93	1	
470	FD-3342	Valve Body, [AODE / 4R70W] (13mm Bolt) (Casting # F2) 1992-Up	1	
470	FD-3343	Valve Body, [AODE / 4R70W] (13mm Bolt) (Casting # F3) (1-3 OHM Lock-Up) 1993-94	1	
470	FD-3343B	Valve Body, [AODE / 4R70W] (13mm Bolt) (Casting # F3) (10-15 OHM Lock-Up) 1995	1	
470	FD-3344	Valve Body, [AODE / 4R70W] (10mm Bolt) (Casting # F6) (Soft Harness) 1996-97	1	
470	FD-3345	Valve Body, [AODE / 4R70W] (With 2-3 Accumulator Support Plate) (Solid Harness) 1998-00	1	
470	FD-3346	Valve Body, [AODE / 4R70W] (Without 2-3 Accumulator Support Plate) (Solid Harness) 2000-03	1	
470	FD-3347	Valve Body, [4R70E / 4R75E] (Without 2-3 Accumulator Support Plate) (Solid Harness) 2004-Up	1	
		VALVE BODIES		
740	76948	Valve Body, [AOD] 1980-86	1	
740	76948B	Valve Body, [AOD] 1987-91	1	
740	76948C	Valve Body, [AODE] (Electronic) 1992 (*Use 76948D)	1	F2VY-7A100-A
740	76948D	Valve Body, [AODE] (Electronic) (.225”OD Dowel Pins) 1992-95	1	
740	76948F	Valve Body, [4R70W] (Electronic) (.163”OD Dowel Pins) (*Uses Wire Harness) (Cast # RFF6AP) 1996-97	1	
740	76948G	Valve Body, [4R70W] (Electronic) (.163”OD Dowel Pins) (Enclosed Circuit Board) (Cast # RFF6AP) 1998-00	1	
740	76948H	Valve Body, [4R70W / 4R75W] (With Only 2-Round Backing Plates on Top of Valve Body) (Cast # RF-1L3P-7A092-AA) 2001-03	1	
740	76948J	Valve Body, [4R70E / 4R75E] 2004-08 (Hard Wired)	1	
740	76948K	Valve Body, [4R70E /4R75E] 2009-Up (Soft Wired)	1	
		VALVE BODY COMPONENTS		
741	K76241	Spring Kit, [AOD] (Throttle Valve Buzz Fix) 1980-89	1	
741	76593	Check Ball, [AOD / AODE] (Valve Body) (.312” or 5/16”) (Viton) 1980-Up	1	E7DZ-7E195-A
741	13924X	Check Ball, [AOD / AODE / 4R70W] (Valve Body) (.250” or 1/4”) (Steel) 1980-Up	7	
741	10000-01K	Relief Valves, [AOD] (In Valve Body) (10 Per Kit) 1980-93	1	Sonnax
741	76948-04K	Bypass Kit, [AODE / 4R70W / 4R75W / 4R70E / 4R75E] (Bypass Clutch Control Sleeve & Plunger) 1993-Up	1	Sonnax
741	76970	TV Plunger, [AOD] (Oversized Where Plunger Exits the Valve Body Bore) **(*Requires: 76970-RM)** 1980-93	1	Sonnax
	76970RM	Reamer, [AOD] (TV Plunger Bore) (*Bores Only Where TV Plunger Exits Valve Body)	1	Sonnax
741	76989-03K	Sleeve Kit, [AOD] (Throttle Valve Plug & Sleeve) (*Factory Style) 1980-93	1	Sonnax
741	76989K	Sleeve Kit, [AOD] (Throttle Valve Plug & Sleeve) (*Uses 2- O-Rings) 1980-93	1	Sonnax

AOD/AODE/4R70W/E/4R75W/E

741	76999SML	Plugs, [AOD / AODE] (Valve Body End Plugs) (Small) (3 Per Kit) 1980-Up	1	Sonnax
741	76991-01K	Valve Kit, [AOD] (1-2 Capacity Modulator Valve) (Oversize) (1-Valve, 2-Springs, 2-O-Rings, & End Plug)	1	Sonnax
	76991-TL	Reamer & Jig, [AOD] **(*Use With 76991-01K)** (1-2 Capacity Modulator Valve Kit) 1980-93	1	Sonnax
741	76999LRG	Plugs, [AOD / AODE] (Valve Body End Plugs) (Large) (3 Per Kit) 1980-Up	1	Sonnax
741	76948-29K	Boost Valve & Sleeve, [4R70W / 4R75W / 4R70E / 4R75E] (Overdrive Servo Regulator) 2001-Up	1	Sonnax
741	76970-02K	TV Control Valve Kit, [AOD] (Oversized TV Valve, Spring & TV Plunger) 1980-93	1	Sonnax
	76970TL	Reamer, [AOD] (TV Control Valve) (*For 76970-02K) (Oversized Reamer With Guide) 1980-93	1	Sonnax
741	76948-01	Valve, [AODE] (Main Pressure Regulator Prevents Low Line Pressure) 1991-95	1	Sonnax
741	76948-06	Spring, [AODE] (Pressure Regulator) (5 Per Set) 1991-95	1	Sonnax
741	76948-09	Valve, [4R70W / 4R75W / 4R70E / 4R75E] (Main Pressure Regulator) 1996-Up	1	Sonnax
741	76948-12K	Valve & Spring Kit, [4R70W / 4R70E / 4R75W / 4R75E] (Elevated Pressure Regulator) 1996-Up	1	Sonnax
741	SCAODE	Sure Cure Kit, [AODE] 1992-95	1	Sonnax
741	SCAODE-1	Sure Cure Kit, [4R70W / 4R75W / 4R70E / 4R75E] 1996-Up	1	Sonnax
741	76948-16K	Valve Assembly, [AODE / 4R70W] (Pressure Regulator) 1991-95 (Contains: Oversized Pressure Valve, Oversized Reverse Boost Valve & Sleeve) **(*Requires: Reamer 76948-TL4)**	1	Sonnax
741	76948-17K	Valve Assembly, [4R70W / 4R75W / 4R70E / 4R75E] (Pressure Regulator) 96-Up (Contains: Oversized Pressure Valve, Oversized Reverse Boost Valve & Sleeve) **(*Requires: Reamer 76948-TL4)**	1	Sonnax
	76948-TL4	Oversize Reamer, (*For 76948-16K & 76948-17K)	1	Sonnax
741	K026	Boost Valve & Sleeve, [AODE / 4R70W / 4R70E / 4R75W / 4R75E] (Steel Valve & Sleeve) 1992-Up	1	Superior
741	76948-02K	Boost Valve & Sleeve, [AODE / 4R70W / 4R75W / 4R70E] 1991-Up	1	Sonnax
741	K025	Boost Valve & Sleeve, [AOD] (Reverse) 1980-91	1	Superior
741	76999MED	Plugs, [AOD / AODE] (Valve Body End Plugs) (Medium) (3 Per Kit) 1980-Up	1	Sonnax
741	76999-04K	End Plug Kit, [AOD] (Valve Body) (3-Medium, 1-Small Plug, & 8-Small O-Rings) 1980-E83	1	Sonnax
741	76999-05K	Shift Valve & Sleeve Assembly, [AOD] (3/4 Shift With End Plugs) L1983-Up	1	Sonnax
741	76948-14K	Valve & Spring Kit, [AODE / 4R70W / 4R70E / 4R75W / 4R75E] (Solenoid Regulator Valve) (Contains: Valve, Spring, End Plug, & O-Rings) **(*Requires: 76948-BST2)**	1	Sonnax
741	76990-03K	Boost Valve Kit, [AOD] (Pressure Regulator) (*Factory Style) 1980-93	1	Sonnax
741	76990-04K	Boost Valve Kit, [AOD] (Pressure Regulator) (With O-Rings) (High/Large Ratio) 80-93	1	Sonnax
741	76990K	Boost Valve Kit, [AOD] (Pressure Regulator) (With O-Rings For Sleeve) (OE Ratio) 1980-93	1	Sonnax
747	K092	Plate, [4R70W / 4R75W / 4R70E / 4R75E] (Valve Body) (Super Tough) 2000-Up	1	Superior
	76507F-01K	Plate, [4R70W / 4R75W / 4R70E / 4R75E] (Stiffner) (*For Direct Clutch Failure) (Bolts to Valve Body Over Spacer Plate) 2001-Up	1	Sonnax
	76894	Bracket, [AODE / 4R70W] (EPC Solenoid) 1992	1	
	76894A	Bracket, [AODE / 4R70W] (EPC Solenoid) 1993-95	1	F3AZ-7H111-A
	76894B	Bracket, [AODE / 4R70W] (EPC Solenoid) 1996-Up	1	F6AZ-7H111-A
		HARD PARTS (Continued)		
760	76890	Case, [AOD] (Early, Small Cooler Line Fittings) (11/16") (Cast # RFE0) 1980-93	1	
760	76890A	Case, [AOD] (Late, Large Cooler Line Fittings) (3/4") (Cast # RFE3 or RFEP) 1980-93	1	
760	76890B	Case, [AODE / 4R70W] (2-Bolt Starter) (Cast # RFF4) (.225"OD Valve Body Dowel Pins) 1992-95	1	
760	76890C	Case, [AODE / 4R70W] (3-Bolt Starter) (Cast # RFF2 or RFF4-AA) (.225"OD Valve Body Dowel Pins) 1992-95	1	
760	76890E	Case, [4R70W] (3-Bolt Starter) (Cast # RFF7) (.163"OD Valve Body Dowel Pins) (With Output Sensor Hole) 1996-03	1	

760	76890D	Case, [4R70W] (2-Bolt Starter) (Cast # RFF7) (.163"OD Valve Body Dowel) (With Sensor Hole) 1996-03	1	
760	76890F	Case, [4R70E] (2-Bolt Starter) (Cast # RF3L3P) (With Turb Shaft & Output Sensor Hole) 2004-Up	1	
760	76890G	Case, [4R75E] (3-Bolt Starter) (Cast # RF3L3P or RF6L3P) (With Sensor Holes) 04-Up	1	
		CASE COMPONENTS		
761	56361-01K	Sleeve, [AOD / AODE / 4R70W] (Shift Linkage Shaft) (With 1-Sleeve, 1-3mm Pin, & 1-.125" Pin)	1	Sonnax
	56361-TL	Tool Kit, [AOD / AODE / 4R70W] (*For 56361-01K)	1	Sonnax
761	T76821	Alignment Pin Adapters, [4R70W] (Valve Body to Case) (*Allows the Use of Late VB's)	1	Teckpak
	SERVO-FIX	Servo Pin Bore Reaming Fixture, [AOD / AODE / 4R70W / 4R75W / 4R70E / 4R75E]	1	Sonnax
	TK-56RTD	Tool Kit, [AOD / AODE / 4R70W] (Shift Linkage Pin Remover & Installer)	1	Teckpak
		HARD PARTS (Continued)		
765	76801	Pan, [AOD] (2WD) 1980-93	1	
765	76801A	Pan, [AODE / 4R70W / 4R75W] (2WD) 1992-95	1	
765	76801B	Pan, [AOD] (4x4) 1980-93	1	
765	76801C	Pan, [4R70W / 4R75W / 4R70E / 4R75E] (4x4) 1992-Up & (2WD) 1996-Up	1	
770	76892	Extension Housing, [AOD / AODE] (2WD) (10-1/2") (Small Seal) 1980-93	1	
770	76893	Extension Housing, [AOD / AODE] (2WD) (11-1/2") (Small Seal) 1980-93	1	
770	76893A	Extension Housing, [AOD / AODE] (4x4) (6-3/8") (Aluminum With 2-Threaded Bosses For Shifter) (Cast # RF-F67P-7A040-AA)	1	
770	76893AB	Extension Housing, [AOD / AODE] (4x4) (6-3/8") (Aluminum With 1-Threaded Boss For Shifter)	1	
770	76893AC	Extension Housing, [AODE / 4R70W] (4x4) (6-3/8" Long) (Aluminum With 2-Threaded Bosses For Shifter) (Cast # RF-F2TP-7A040-BA or RF-3L3P-7A040-AB)	1	
770	76893B	Extension Housing, [4R70W] (2WD) (10-1/2") (Large Seal) (With Speed-O Hole) 93-03	1	
770	76893C	Extension Housing, [4R70W] (2WD) (11-1/2") (Large Seal) 1993-03	1	
770	76893K	Extension Housing, [4R70E / 4R75E] (2WD) (10-1/2") 2004-Up (No Speed-O Hole)	1	
774	76896A	Housing, [AOD] (Driven Speed-O) (Cable Driven) 1980-93	1	
839	34996	Pan Magnet, [AOD / AODE / 4R70W] (Rectangular)	1	
853	76812	Cushion, [AOD] (Forward Clutch) (*For Cast Iron Drum) 1980-90	1	
853	76812B	Cushion, [4R70W / 4R75W / 4R70E / 4R75E] (Forward Clutch) (.070") (Steel Drum) 1996-Up	1	
853	76812A	Cushion, [AOD / AODE / 4R70W / 4R75W] (Forward Clutch) (.034") (Steel Drum) 89-95	1	F0SZ-7E085-A
853	76812C	Cushion, [AOD / AODE / 4R70W / 4R75W / 4R70E / 4R75E] (Forward Clutch) (.083") (Steel Drum) 1989-Up	1	
	K76928A	Snap Ring Kit, [AOD / AODE / 4R70W / 4R75W / 4R70E / 4R75E] (Includes: Intermediate Retainer) 1980-Up	1	46980HP
874	76554R	Snap Ring, [AOD / AODE / 4R70W / 4R75W / 4R70E] (Holds Internal Sprag Retainer to Reverse Drum) (.043")	1	391267-S
874	76554SR	Snap Ring, [AOD / AODE] (Holds Internal Sprag Retainer to Reverse Drum) (Spiral) (*Updated)	1	11501326
874	K76240	Ring Kit, [AOD / AODE] (Holds Internal Sprag Retainer to Revrese Drum) (Spiral Ring & Lock) (3 each)	1	Sonnax
876	76600	Snap Ring, [AOD / AODE / 4R70W / 4R75W / 4R70E / 4R75E] (Forward & Reverse Clutch) (.062") 1980-Up	1	C8AZ-7D483-C
876	76600A	Snap Ring, [AOD / AODE / 4R70W / 4R75W / 4R70E / 4R75E] (Forward & Reverse Clutch) (.076") 1980-Up	1	C7AZ-7D483-A
876	76600B	Snap Ring, [AOD / AODE / 4R70W / 4R75W / 4R70E / 4R75E] (Forward & Reverse Clutch) (.090") 1980-Up	1	C8AZ-7D483-C
876	76600C	Snap Ring, [AOD / AODE / 4R70W / 4R75W / 4R70E / 4R75E] (Forward & Reverse Clutch) (.104") 1980-Up	1	C8AZ-7D483-A

AOD/AODE/4R70W/E/4R75W/E

877	76602	Snap Ring, [AOD / AODE / 4R70W / 4R75W / 4R70E / 4R75E] (Holds Forward Clutch Retainer In Drum) 1980-Up	1	388099-S
878	76601	Snap Ring, [AODE / 4R70W / 4R75W / 4R70E / 4R75E] (Direct Clutch) (.052") 92-Up	1	F3AZ-7D483-A
878	76601A	Snap Ring, [AODE / 4R70W / 4R75W / 4R70E / 4R75E] (Direct Clutch) (.066") 92-Up	1	F3AZ-7D483-B
878	76601B	Snap Ring, [AODE / 4R70W / 4R75W / 4R70E / 4R75E] (Direct Clutch) (.080") 92-Up	1	F3AZ-7D483-C
878	76601C	Snap Ring, [AODE / 4R70W / 4R75W / 4R70E / 4R75E] (Direct Clutch) (.094") 92-Up	1	F3AZ-7D483-D
879	76602	Snap Ring, [AOD / AODE / 4R70W / 4R75W / 4R70E / 4R75E] (Holds Direct Retainer In Drum) 1980-Up	1	388104-S2
	76811-01K	Retaining Ring, [AOD] (Shaft to Direct Drum) (5 Per Kit) (*Keeps Direct Shaft Off Output Shaft)	1	Sonnax
883	76603	Snap Ring, [AOD / AODE / 4R70W] (Holds Center Support to Case) (2-Hooks at Each End) 1980-02	1	388501-S
883	76603E	Snap Ring, [4R70W / 4R75W / 4R70E / 4R75E] (Holds Center Support to Case) (1-Hook on End) 2003-Up	1	
889	76609	Snap Ring, [AOD] (Holds Ring Gear Hub) (Flat) 1980-93	1	
889	76609E	Snap Ring, [AODE / 4R70W / 4R70E / 4R75W / 4R75E] (Holds Ring Gear to Hub) (.060") (Wavy) 1992-Up	1	
893	76610	Snap Ring, [AOD / AODE / 4R70W / 4R75W / 4R70E / 4R75E] (Holds Reverse Clutch Return Spring In) 1980-Up	1	E0AZ-7A577-A
894	76611	Snap Ring, [AOD / AODE / 4R70W / 4R70E / 4R75E] (Holds Ring Gear Hub to Output Shaft) (.062") (1.950"OD)	1	97713-S
895	76615	Snap Ring, [AODE / 4R70W / 4R70E / 4R75W / 4R75E] (Holds # 691 Sleeve to Output Shaft) 1992-Up	1	
896	76616	Snap Ring, [AOD] (Holds Reverse Servo In Case) 1980-93	1	38815-S
896	76616E	Snap Ring, [AODE / 4R70W / 4R75W / 4R70E / 4R75E] (Holds Reverse Servo In Case) 1992-Up	1	
897	76614	Snap Ring, [AOD] (Holds Overdrive Servo In Case) 1980-93	1	388216-S
897	76614E	Snap Ring, [AODE / 4R70W / 4R75W / 4R70E / 4R75E] (Holds Overdrive Servo In Case) 1992-Up	1	F2VY-7384-B
898	76617	Snap Ring, [AOD] (Holds 2-3 Accumulator In Case) 1980-93	1	97631-S
898	76617E	Snap Ring, [AODE / 4R70W] (Holds 2-3 & 1-2 Accumulator In Case) (.077") (2.230"OD) 1992-Up	2	F2VY-7384-A
899	76618	Snap Ring, [AOD] (Holds 3-4 Accumulator In Case) 1980-93	1	97626-S
900	K76831A	Servo Assembly, [AOD] (Overdrive) (V-8 302) (With Letter "C") 1980-93	1	E0AZ-7F200-B
900	K76830	Servo Assembly, [AOD] (Overdrive) (V-8 351) (With Letter "B") 1980-93	1	
900	K76831	Servo Assembly, [AOD] (Overdrive) (V-6) 1980-93 (With Letter "A")	1	
900	K76832	Servo Assembly, [AODE / 4R70W] (Overdrive Servo) (2.680"OD) (Bonded) 1992-03	1	
900	K76832A	Servo Assembly, [AODE / 4R70W / 4R70E / 4R75E] (Overdrive Servo) (2.500"OD)(Bonded) 1993-Up	1	
900	K76840	Servo Assembly, [AOD] (Overdrive Servo) (Superior Super Servo) (2.874"OD) 1980-93	1	Superior
901	76831-SP	Spring, [AOD] (Overdrive Servo) (Stamped "A") 1980-93	1	Sonnax
901	76281A	Spring, [AOD] (Overdrive Servo) (Green) 1980-93	1	
901	76281B	Spring, [AOD] (Overdrive Servo) (White) 1980-93	1	
901	76281C	Spring, [AODE] (Overdrive Servo) 1992	1	
901	76281D	Spring, [AODE / 4R70W] (Overdrive Servo) (Yellow) (2.080" Long) 1993-03	1	F2VY-7F201-A
901	76281K	Spring, [4R70E / 4R75E] (Overdrive Servo) (Green) (2.235" Long) 2004-Up	1	
902	76831A	Piston, [AOD] (Overdrive Servo) (V-6) (Stamped "C") (2.183"OD) 1980-93	1	E0AZ-7F200-A
902	76830	Piston, [AOD] (Overdrive Servo) (V-8 302) (Stamped "B") (2.490"OD) 1980-93	1	E0AZ-7F200-B
902	76831	Piston, [AOD] (Overdrive Servo) (V-8 351) (Stamped "A") (2.675"OD) 1980-93	1	E9SZ-7F200-A
902	76832	Piston, [AODE / 4R70W / 4R70E / 4R75E] (Overdrive Servo) (Bonded Rubber) (2.680"OD) 1992-Up	1	F2VY-7H188-A

902	76832A	Piston, [AODE / 4R70W] (Overdrive Servo) (2-Pieces) (Bonded Rubber With Sleeve) (2.500"OD) 1993-98	1	F7AZ-7H188-AA
903	76833E	Pin, [AODE / 4R70W] (Overdrive Servo) (1-Pin, 2- O-Rings, 1-Washer) 1992-Up	1	Sonnax
903	76833	Pin, [AOD] (Overdrive Servo) (1-Pin, 2- O-Rings, 1-Washer) 1980-93	1	Sonnax
904	76831CC	Cover, [AOD] (Overdrive Servo) (V-8 302) (Piston Stamped "B") 1980-93	1	
904	76831CB	Cover, [AOD] (Overdrive Servo) (V-8 351) (Piston Stamped "A") 1980-93	1	E0AZ-7D027-D
904	76831CA	Cover, [AOD] (Overdrive Servo) (V-6) (Piston Stamped "C") 1980-93	1	
904	76832SL	Sleeve, [AODE / 4R70W] (Overdrive Servo) (2.500"ID) 1993-Up	1	
911	76282A	Spring, [AOD / AODE / 4R70W / 4R75W / 4R70E 4R75E] (Reverse Servo) 1980-Up	1	E0AZ-7D031-B
912	76528A	Piston, [AOD / AODE / 4R70W / 4R75W / 4R70E / 4R75E] (Reverse Servo) (1-Groove) 1980-Up	1	E0AZ-7D189-A
912	76528B	Piston, [AOD / AODE / 4R70W / 4R75W / 4R70E / 4R75E] (Reverse Servo) (2-Grooves) 1980-Up	1	E0AZ-7D189-B
912	76528C	Piston, [AOD / AODE / 4R70W / 4R75W / 4R70E / 4R75E] (Reverse Servo) (3-Grooves) 1980-Up	1	E0AZ-7D189-C
914	76885	Cover, [AOD / AODE / 4R70W / 4R75W / 4R70E / 4R75E] (Reverse Servo) 1980-Up	1	E0AZ-7D036-A
925	76890-01K	Sleeve Kit, [AODE] (1-2 Accumulator) (Piston, Sleeves, Cover, & O-Rings) **(*Requires: 76890-TL)** 1992-Up	1	Sonnax
	76890-TL	Installation Tool (*For 76890-01K)	1	Sonnax
926	76924A	Spring, [AODE] (1-2 Accumulator) (Pink) (Bottom) 1992-95	1	
926	76821	Spring, [AODE] (1-2 Accumulator) (White) (Top) 1992-95	1	F7AZ-7F284-AA
926	76821A	Spring, [AODE] (1-2 Accumulator) (Dark Blue) (Top) 1992-95	1	
926	76821B	Spring, [AODE / 4R70W / 4R75W / 4R70E / 4R75E] (1-2 Accumulator) (Lt. Blue) 1992-Up	1	
926	76924	Spring, [AODE / 4R70W / 4R75W / 4R70E / 4R75E] (1-2 Accumulator) (Purple) (Hi-Performance) (Bottom) 1992-Up	1	F3LY-7F284-A
926	76821C	Spring, [4R70W / 4R75W / 4R70E / 4R75E] (1-2 Accumulator) (Brown) 1995-Up	1	
926	76821K	Spring, [4R70E / 4R75E] (1-2 Accumulator) (Blue) 2004-Up (Inner Spring)	1	
926	76948-08	Spring Set, [AOD] (1-2 Accumulator) (Medium) (10 Per Pack) 1980-93	1	Sonnax
927	76838	Piston, [AODE] (1-2 Accumulator) 1992-95 (Aluminum) (*O-Ring Type)	1	
927	76838A	Piston, [AODE / 4R70W / 4R75W / 4R70E / 4R75E] (1-2 Accumulator) (Bonded Rubber) 1994-Up	1	F7AZ-7F251-AA
929	76839	Cover, [AODE / 4R70W / 4R75W / 4R70E / 4R75E] (1-2 Accumulator) (Bonded Rubber) 1994-Up	1	F4AZ-7F247-A
931	76715	Spring, [AOD / AODE / 4R70W] (2-3 Accumulator) (1.880" Long) 1980-03	1	E0AZ-7F285-A
931	76715A	Spring, [4R70E / 4R75E] (2-3 Accumulator) (1.745" Long) 2004-Up	1	1L3Z-7F285-AA
932	76890-21K	Piston Kit, [AOD / AODE / 4R70W] (2-3 Accumulator) 1980-96 (Contains: 2-Sleeves, 1-Piston, 2-O-Rings)	1	Sonnax
932	76836	Piston, [AOD / AODE / 4R70W] (2-3 Accumulator) (Aluminum) 1980-96	1	
932	76836HD	Piston, [AODE / 4R70W] (2-3 Accumulator) (Plastic) (Double Ring) 1980-Up	1	
932	76836A	Piston, [AOD / AODE / 4R70W / 4R70E / 4R75W / 4R75E] (2-3 Accumulator) (Steel /Bonded Rubber) 1980-Up	1	F7AZ-7H292-AB
934	76836C	Cover, [AOD] (2-3 Accumulator) 1980-93	1	E0AZ-7B264-A
934	76838D	Cover, [AODE / 4R70W] (2-3 Accumulator) 1992-96	1	F2AZ-7B264-A
934	76836E	Cover, [4R70W] (2-3 Accumulator) (.496" Overall Height) 1997-00	1	
934	76836F	Cover, [4R70W / 4R75W / 4R70E / 4R75E] (2-3 Accumulator) (.585" Overall Height) 2001-Up	1	
937	76837	Piston, [AOD] (3-4 Accumulator) (Letter "A") 1980-81	1	E0AZ-7F287-A
937	76837A	Piston, [AOD] (3-4 Accumulator) (Letter "B") 1982-88	1	E2AZ-7F287-A
937	76837B	Piston, [AOD] (3-4 Accumulator) (Letter "C") 1989-93	1	E2AZ-7F287-A
939	76837C	Cover, [AOD] (3-4 Accumulator) 1980-81	1	E0AZ-7F247-A

AOD/AODE/4R70W/E/4R75W/E

939	76837CA	Cover, [AOD] (3-4 Accumulator) 1982-88	1	E2AZ-7F247-A
939	76837CB	Cover, [AOD] (3-4 Accumulator) 1989-93	1	
962	76855A	Piston, [AOD / AODE / 4R70W] (Intermediate Clutch) (Aluminum) 1980-03	1	F2AZ-7E005-A
962	76855	Piston, [4R70E / 4R75E] (Intermediate Clutch) (Bonded) 2004-Up	1	
964	76803	Piston, [AOD] (Forward Clutch) (With Cast Iron Drum) 1980-93	1	E0AZ-7A262-A
964	76803A	Piston, [AOD / AODE / 4R70W / 4R75W / 4R70E / 4R75E] (Forward Clutch) (With Stamped Steel Drum) 1989-Up	1	
965	76804	Piston, [AOD] (Direct Clutch Iron Drum) (Check Ball Staked Into Piston) (No Metal Retainer) 1980-93	1	
965	76804B	Piston, [AOD] (Direct Clutch) (Cast Iron Drum) (Has a Metal Check Ball Retainer) 1980-93	1	
965	76804A	Piston, [AOD / AODE / 4R70W / 4R75W / 4R70E / 4R75E] (Direct Clutch) (Stamped Steel Drum) 1989-Up	1	F2VY-7A262-A
966	76805	Piston, [AOD] (Reverse Clutch) (Cast Iron Drum) 1980-93	1	E0AZ-7D402-A
966	76805A	Piston, [AOD / AODE / 4R70W / 4R75W / 4R70E / 4R75E] (Reverse Clutch) 1990-Up (Stamped Steel Drum)	1	F2TZ-7D402-A
972	76940	Retainer With Springs, [AOD] (Intermediate Clutch) 1980-93	1	E0AZ-7F222-A
972	76940E	Retainer With Springs, [AODE / 4R70W] (Intermediate Clutch) 1992-03	1	
972	76940K	Retainer, [4R70E / 4R75E] (Intermediate Clutch Spring) 2004-Up	1	
974	76283A	Spring, [AOD / AODE / 4R70W / 4R75W / 4R70E / 4R75E] (Forward Clutch Return) 1980-Up	1	E0AZ-7A480-A
975	76207	Retainer With Springs, [AOD / AODE / 4R70W / 4R75W / 4R70E / 4R75E] (Direct Clutch Return) 1980-Up	1	E5AZ-7F235-A
976	76406	Spring, [AOD / AODE / 4R70W / 4R75W / 4R70E / 4R75E] (Reverse Clutch Return) 1980-Up	1	E0AZ-7B070-A
	76208K	Return Spring, [4R70E / 4R75E] (Internal Clutch) (Waved) (.085") (7-3/4"OD) 2004-Up	1	
984	76930	Retainer, [AOD / AODE / 4R70W / 4R75W / 4R70E / 4R75E] (Forward Clutch Spring) 1980-Up	1	E0AZ-7A527-A
991	K76676	Linkage Assembly, [AOD] (Internal) 1980-93	1	
991	K76676E	Linkage Assembly, [AODE / 4R70W / 4R75W / 4R70E / 4R75E] (Internal) 1992-Up	1	
992	76675A	Shift Lever, [AOD / AODE] (External) (Cast # E4ZP AA) 1983-93	1	E4ZZ-7A256-A
992	76675E	Shift Lever, [AODE / 4R70W / 4R75W / 4R70E / 4R75E] (External) (Cast # F4SP AA) 1992-Up	1	
992	76675F	Shift Lever, [AODE / 4R70W / 4R75W / 4R70E / 4R75E] (External) (Cast # F4AP AA) 1992-Up	1	
992	76675G	Shift Lever, [AODE / 4R70W / 4R75W / 4R70E / 4R75E] (External) (Cast # F75P) 1992-Up	1-2	
992	76675H	Shift Lever, [AODE / 4R70W / 4R75W / 4R70E / 4R75E] (External) (Cast # F7AP AA) 1992-Up	1	
996	K31289	Fitting, [AOD / AODE / 4R70W] (Cooler) (Screw In) (1/4" Pipe Thread) (Pipe Thread Screws In to Case) (*For a 5/16" Push-In Cooler Line)	1	Teckpak
996	31289A	Clip, [AODE / 4R70W] (Cooler Line Retainer) (Plastic) (*For K31289)	1-2	Teckpak

NOTES

ZF6HP26 / 6R60 / 6R80 (FORD)

RWD 6 Speed

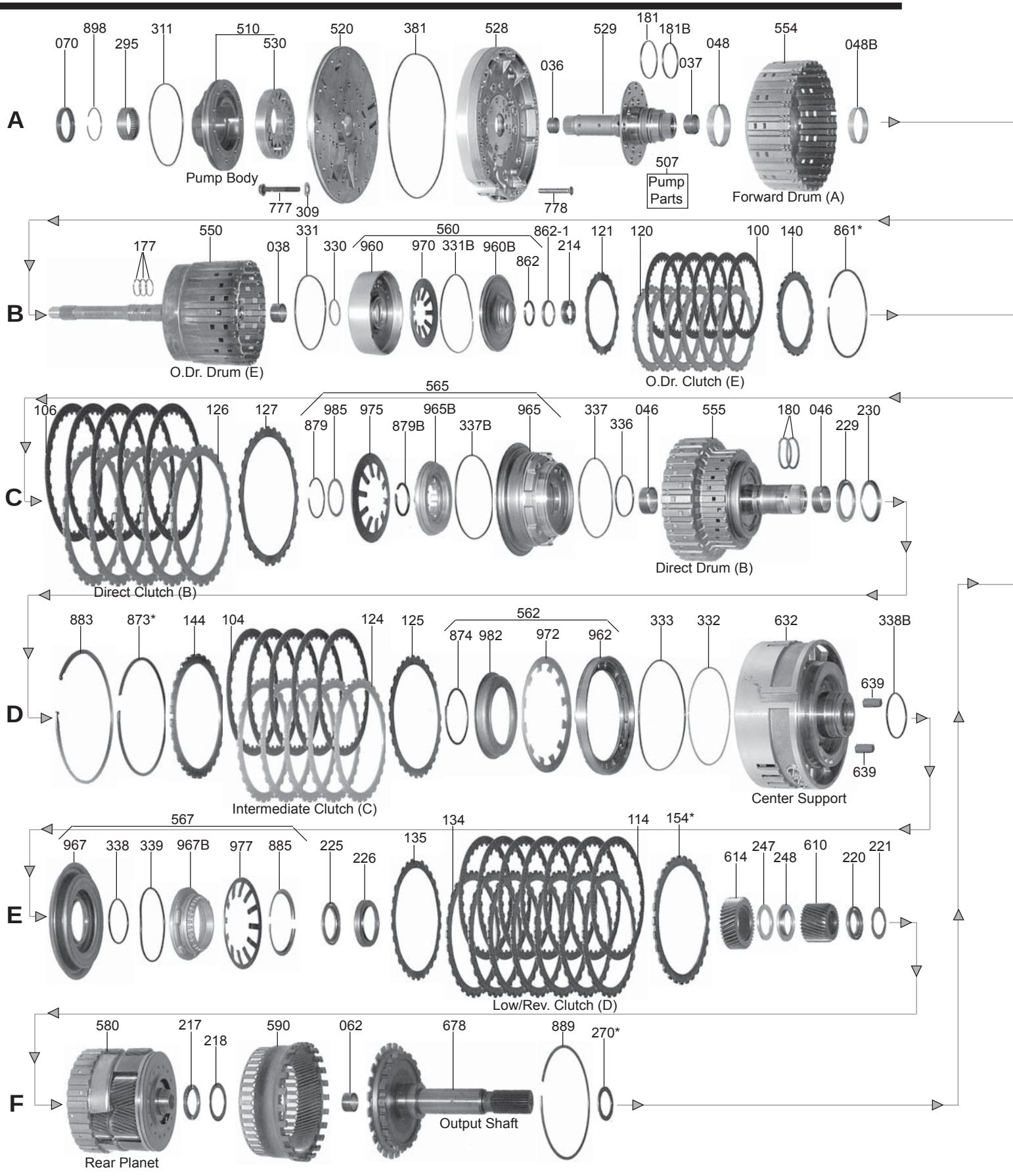

ZF6HP26 / 6R60 / 6R80 (FORD)

RWD 6 Speed

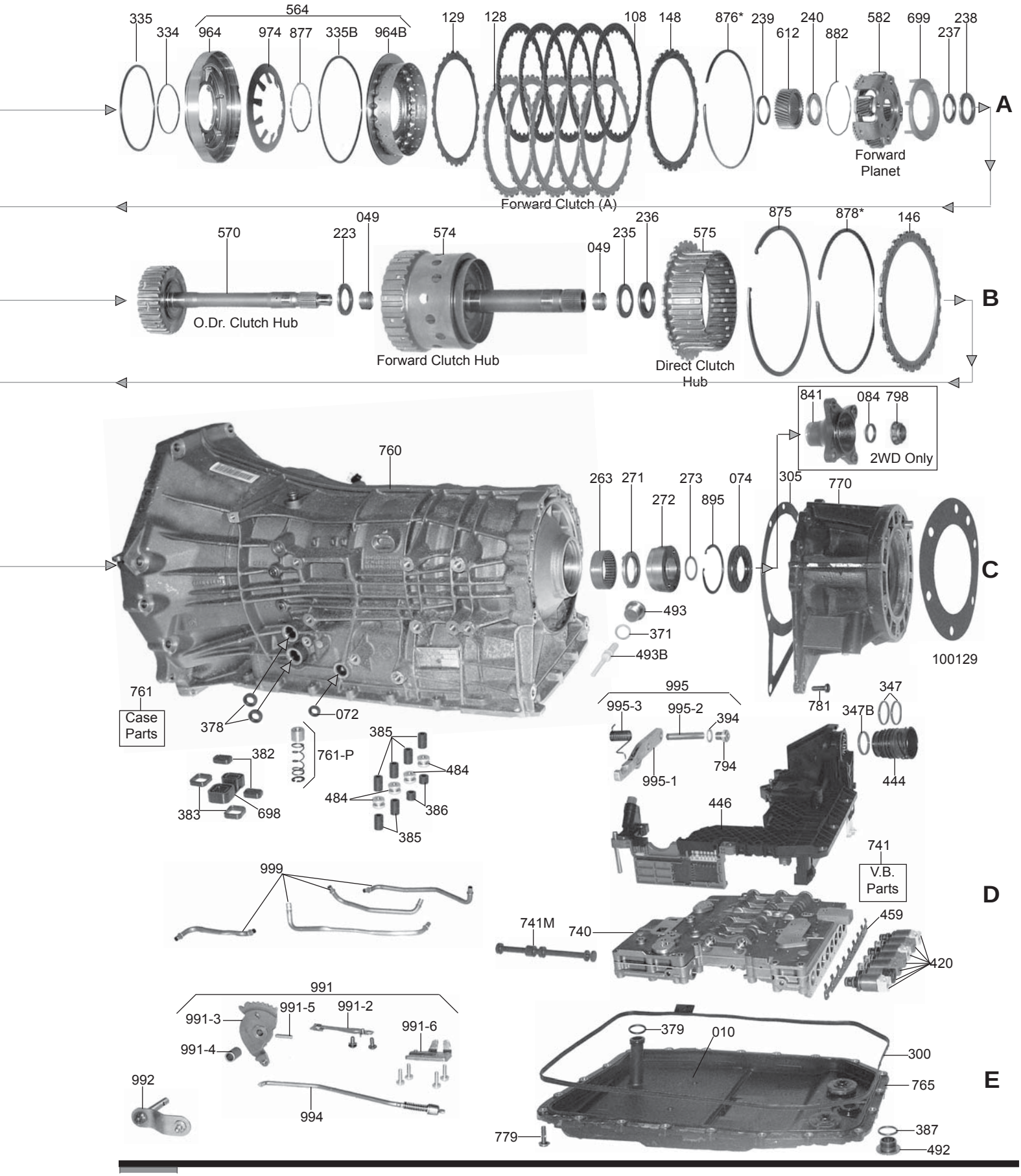

ZF6HP26 / 6R60 / 6R80 (FORD)

ILL#	PART#	DESCRIPTION	QTY	REF #
		OVERHAUL KIT		
	K116900	Overhaul Kit, [6R60] (Ford) 2006-Up	1	
	K116900B	Overhaul Kit, [6R80] (Ford and Lincoln) 2007-Up	1	
	K116900A	Overhaul Kit, [ZF6HP26] (Audi, BMW, JAG, Lincoln, Rover) 2002-Up	1	
	K116900D	Overhaul Kit, [ZF6HP26A] (Audi, BMW) (AWD) 2004-Up	1	
		MASTER L/STEELS KIT		
	DK11600-S	Master L/Steels Kit, [6R60] (Ford) 2006-Up	1	
	DK11600B-S	Master L/Steels Kit, [6R80] (Ford and Lincoln) 2007-Up	1	
	DK11600A-S	Master L/Steels Kit, [ZF6HP26] (Audi, BMW, JAG, Lincoln, Rover) 2002-Up	1	
	DK11600D-S	Master L/Steels Kit, [ZF6HP26A] (Audi , BMW) (AWD) 2004-Up	1	
		MASTER W/STEELS KIT		
	DK11600	Master W/Steels Kit, [6R60] (Ford) 2006-Up	1	
	DK11600B	Master W/Steels Kit, [6R80] (Ford and Lincoln) 2007-Up	1	
	DK11600A	Master W/Steels Kit, [ZF6HP26] (Audi, BMW, JAG, Lincoln, Rover) 2002-Up	1	
	DK11600D	Master W/Steels Kit, [ZF6HP26A] (Audi, BMW) (AWD) 2004-Up	1	
		FILTERS		
010	116710	Filter, [6R60 / 6R80] (Ford) (Before) 12/3/06	1	6L2Z-7A098-AA
010	116710B	Filter, [6R60 / 6R80] (Ford Explorer, Expedition, F-Series, Navigator) After 12/4/06	1	7L1P-7G186A
010	116710A	Filter W/Pan, [ZF6HP26] (Ford) (Filter Made as Part of Pan) 2006-Up	1	
010	116710D	Filter W/Pan, [ZF6HP26] (BMW) (Filter Made as Part of Pan) 2006-Up	1	
		BUSHINGS		
	K116901A	Bushing Kit, [ZF6HP26] 2005-Up	1	
	K116901	Bushing Kit, [6R60] 2006-Up	1	
036	116002	Bushing, [6R60] (Stator Tube) (Front) (.907”ID) (Babbit) 2006-Up	1	
037	116003A	Bushing, [ZF6HP26] (Stator Tube) (Rear) (1.015”ID) (Bronze) 2005-Up	1	
037	116003	Bushing, [6R60] (Stator Tube) (Rear) (1.103”ID) (Babbit) 2006-Up	1	
038	116010A	Bushing, [ZF6HP26] (Overdrive Clutch Drum) (Rear) (Bronze With Oil Pockets) (.669”ID) 2005-Up	1	
038	116010	Bushing, [6R60] (Overdrive Clutch Drum) (Rear) (Babbit With Oil Pockets) (.669”ID) 2006-Up	1	
046	116008A	Bushing, [ZF6HP26 / 6R60] (Direct Drum) (B-Clutch) (Babbit) (1.330”ID) 2005-Up	2	
048	116007	Bushing, [ZF6HP26 / 6R60] (Forward Clutch Drum) (Front) (2.350”ID) 2005-Up	1	
048	116009	Bushing, [ZF6HP26 / 6R60] (Forward Clutch Drum) (Rear) (1.970”ID) 2005-Up	1	
049	116013	Bushing, [ZF6HP26 / 6R60] (Forward Clutch Hub) (Bronze) (.965”ID) 2005-Up	2	
062	116021A	Bushing, [ZF6HP26] (Output Shaft) (Front) (.645”ID) (With Oil Pockets) (Bronze) 05-Up	1	5L7Z-7B256-A
062	116021	Bushing, [6R60] (Output Shaft) (Front) (.645”ID) (With Oil Pockets) (Babbit) 2006-Up	1	6L2Z-7B256-AA
		METAL CLAD SEALS		
070	116151	Seal, [ZF6HP26 / 6R60] (Front Pump) (2.280”OD) 2005-Up	1	6L2Z-7A248-AA
072	116159	Seal, [ZF6HP26 / 6R60] (Shift Lever) 2005-Up	1	
074	116158	Seal, [ZF6HP26 / 6R60] (Rear) (4x4) (2.835”OD) (1.532”ID) 2005-Up	1	5L7Z-7052-BA
074	116157	Seal, [6R60] (Rear) (2WD) (2.835”OD) (1.730”ID) 2006-Up	1	
074	116157B	Seal, [6R80] (Rear) (2WD) (2.835” OD) (1.730” ID) 2008-Up	1	

074	116158B	Seal, [6R80] (Rear) (4X4) 2008-Up	1	
084	116025	Seal, [6R60] (2WD) (Presses Into the Yoke, Under the Nut) 2006-Up	1	
		FRICTION CLUTCH / FRICTION MODULE		
100	116102	Friction, [ZF6HP26 / 6R60] (Overdrive) (E-Clutch) (.063" Thick) (30 Teeth) (5.148"OD) 2002-Up	5-7	
100	116102A	Friction, [6R80] (Overdrive) (E-Clutch) (.079" Thick) (30 Teeth) (5.148" OD) 2007-Up	6	
104	116103A	Friction, [ZF6HP26 / 6R80] (Intermediate) (C-Clutch) (.087" Thick) (30 Teeth) (7.370" OD)	4-5	
104	116103	Friction, [6R60] (Intermediate) (C-Clutch) (.082" Thick) (30 Teeth) (7.370" OD) 2006-Up	4	
106	116103A	Friction, [ZF6HP26] (Direct) (B-Clutch) (.087" Thick) (30 Teeth) (7.370" OD) 2002-Up	4-5	
106	116103	Friction, [6R60 / 6R80] (Direct) (B-Clutch) (.082" Thick) (7.370" OD) 2006-Up	4-5	
108	116101	Friction, [ZF6HP26 / 6R60 / 6R80] (FWD) (A-Clutch) (.063" Thick) (7.370" OD) 2002-Up	4-5	
114	116101	Friction, [ZF6HP26 / 6R80] (Low & Reverse) (D-Clutch) (.063" Thick) (7.370" OD) 02-Up	6-7	
114	116103	Friction, [6R60] (Low & Reverse) (D-Clutch) (.082" Thick) (7.370" OD) 2006-Up	4	
	K116100	Friction Module, [6R60] 2006-Up	1	
	K116100A	Friction Module, [ZF6HP26] 2002-Up	1	
	K116100B	Friction Module, [6R80] 2007-Up	1	
		STEEL CLUTCH		
120	116114	Steel, [ZF6HP26 / 6R60 / 6R80] (Overdrive) (E-Clutch) (.118" Thick) (24 Teeth) (4.200 ID) 2002-Up	6-7	
121	116115	Steel, [ZF6HP26 / 6R60 / 6R80] (Wavy) (Overdrive) (E-Clutch) (.039" Thick) (4.200 ID) 2005-Up	1	
124	116110	Steel, [ZF6HP26 / 6R80] (Intermediate) (C-Clutch) (.118" Thick) (30 Teeth) (6.450 ID) 2002-Up	4-5	
124	116112	Steel, [6R60] (Intermediate) (C-Clutch) (.082" Thick) (30 Teeth) (6.450 ID) 2006-Up	4	
125	116111	Steel, [ZF6HP26 / 6R60 / 6R80] (Wavy) (Intermediate) (C-Clutch) (.035" Thick) 2005-Up	1	
126	116112	Steel, [ZF6HP26 / 6R60 / 6R80] (Direct) (B-Clutch) (.082" Thick) (30 Teeth) (6.450 ID) 2002-Up	4-5	
127	116111	Steel, [ZF6HP26 / 6R60 / 6R80] (Wavy) (Direct) (B-Clutch) (.035" Thick) (28 Teeth) 05-Up	1	
128	116110	Steel, [ZF6HP26 / 6R60 / 6R80] (FWD) (A-Clutch) (.118" Thick) (30 Teeth) (6.450 ID) 2002-Up	4-5	
129	116111	Steel, [ZF6HP26 / 6R60 / 6R80] (Wavy) (FWD) (A-Clutch) (.035" Thick) (28 Teeth) 05-Up	1	
134	116112	Steel, [ZF6HP26 / 6R80] (Low & Reverse) (D-Clutch) (.082" Thick) (30 Teeth) (6.450 ID) 2002-Up	6-7	
134	116110	Steel, [6R60] (Low & Reverse) (D-Clutch) (.118" Thick) (30 Teeth) (6.450 ID) 2006-Up	6	
135	116111	Steel, [ZF6HP26 / 6R60 / 6R80] (Wavy) (Low & Reverse) (D-Clutch) (.035" Thick) 05-Up	1	
	K116110	Steel Module, [6R60] 2006-Up	1	
	K116110A	Steel Module, [ZF6HP26 / 6R80] 2002-Up	1	
		PRESSURE PLATES		
140	116131	Pressure Plate, [ZF6HP26 / 6R60] (ALL) (Overdrive Clutch) (E-Clutch) (24 Teeth) (4.220" ID) 2002-Up	1	6L2Z-7B066-D
144	116132	Pressure Plate, [ZF6HP26 / 6R60] (ALL) (Intermediate Clutch) (C-Clutch) (.154" Thick) (30 Teeth) (6-7/16" ID) (No Dimples) 2002-Up	1	6L2Z-7B066-BA
146	116132A	Pressure Plate, [ZF6HP26] (ALL) (Direct Clutch) (B-Clutch) (.154" Thick) (30 Teeth) (6-7/16" ID) (30 Dimples) 2002-Up	1	5L7Z-7B066-A
146	116132	Pressure Plate, [6R60] (ALL) (Direct Clutch) (B-Clutch) (.154" Thick) (30 Teeth) (6-7/16" ID) (No Dimples) 2006-Up	1	
148	116130	Pressure Plate, [ZF6HP26] (ALL) (Forward Clutch) (A-Clutch) (Top) 2002-Up	1	
148	116110	Pressure Plate, [6R60] (Forward Clutch) (A-Clutch) (Top) 2006-Up	1	

ZF6HP26 / 6R60 / 6R80 (FORD)

154	116133	Pressure Plate, [ZF6HP26 / 6R60] (Low / Reverse Clutch) (.200") (30 Teeth) 2005-Up	1	6L2Z-7B066-HA
154	116133A	Pressure Plate, [ZF6HP26 / 6R60] (Low / Reverse Clutch) (.208") (30 Teeth) 2005-Up	1	6L2Z-7B066-M
154	116133B	Pressure Plate, [ZF6HP26 / 6R60] (Low / Reverse Clutch) (.212") (30 Teeth) 2005-Up	1	6L2Z-7B066-JA
154	116133C	Pressure Plate, [ZF6HP26 / 6R60] (Low / Reverse Clutch) (.220") (30 Teeth) 2005-Up	1	6L2Z-7B066-N
154	116133D	Pressure Plate, [ZF6HP26 / 6R60] (Low / Reverse Clutch) (.224") (30 Teeth) 2005-Up	1	6L2Z-7B066-KA
154	116133E	Pressure Plate, [ZF6HP26 / 6R60] (Low / Reverse Clutch) (.232") (30 Teeth) 2005-Up	1	6L2Z-7B066-P
154	116133F	Pressure Plate, [ZF6HP26 / 6R60] (Low / Reverse Clutch) (.236") (30 Teeth) 2005-Up	1	6L2Z-7B066-LA
		SEALING RINGS		
	K116903A	Ring Kit, [ZF6HP26] (Teflon) 2001-Up	1	
	K116903	Ring KIt, [6R60] (Teflon & Metal) 2006-Up	1	
	K116903B	Ring Kit, [6R80] 2008-Up	1	
177	116301A	Ring, [ZF6HP26] (Input Shaft) (Overdrive Drum W/Shaft) (.985"OD) (Teflon) 2005-Up	3	5L7Z-7G091-A
177	116301	Ring, [6R60] (Input Shaft) (Overdrive Drum W/Shaft) (1.064"OD) (Teflon) 2006-Up	2	6L2Z-7G091-DA
180	116302	Ring, [ZF6HP26 / 6R60] (Direct Drum Shaft) (Teflon) 2005-Up	2	6L2Z-7D020-CA
181	116303A	Ring, [ZF6HP26] (Forward Clutch) (Stator Tube Front Ring) (2.355"OD) (Teflon) 2005-Up	1	
181	116304	Ring, [6R60] (Forward Clutch) (Stator Tube Rear Ring) (2.200"OD) (Metal) 2006-Up	1	6L2Z-7L323-AA
181	116304A	Ring, [ZF6HP26] (Forward Clutch) (Stator Tube Rear Ring) (2.200"OD) (Teflon) 2005-Up	1	5L7Z-7D019-A
181	116303	Ring, [6R60] (Forward Clutch) (Stator Tube Front Ring) (2.355"OD) (Metal) 2006-Up	1	6L2Z-7D019-AA
		WASHERS & BEARINGS		
211	116440	Shim, [ZF6HP26 / 6R60] (Stator to Forward Sun Gear) (.100" Thick) (1.930"OD) (1.600"ID) 2005-Up	1	6L2Z-7D014-AA
211	116440A	Shim, [ZF6HP26 / 6R60] (Stator to Forward Sun Gear) (.108" Thick) (1.930"OD) (1.600"ID) 2005-Up	1	6L2Z-7D014-BA
211	116440B	Shim, [ZF6HP26 / 6R60] (Stator to Forward Sun Gear) (.116" Thick) (1.930"OD) (1.600"ID) 2005-Up	1	6L2Z-7D014-CA
211	116440C	Shim, [ZF6HP26 / 6R60] (Stator to Forward Sun Gear) (.124" Thick) (1.930"OD) (1.600"ID) 2005-Up	1	6L2Z-7D014-DA
211	116440D	Shim, [ZF6HP26 / 6R60] (Stator to Forward Sun Gear) (.131" Thick) (1.930"OD) (1.600"ID) 2005-Up	1	6L2Z-7D014-F
214	116416A	Bearing W/Races, [ZF6HP26] (Overdrive Drum to Overdrive Clutch Hub) (.295" Thick) (1.505"OD) (.835"ID) 2005-Up	1	
214	116416	Bearing W/Races, [6R60] (Overdrive Drum to Overdrive Clutch Hub) (.285" Thick) (1.586"OD) (.813"ID) 2006-Up	1	6L2Z-7C096-B
217	116417A	Bearing W/Races, [ZF6HP26] (Rear Planet to Output Shaft) (.158" Thick) (2.19"OD) (1.58"ID) 2005-Up	1	
217	116417	Bearing W/Races, [6R60] (Rear Planet to Output Shaft) (.197" Thick) (2.455"OD) (1.626"ID) 2006-Up	1	6L2Z-7G178-AA
218	116441A	Race, [ZF6HP26] (Rear Planet to Output Shaft) (.038" Thick) (2.323"OD) (1.71"ID) 05-Up	1	5L7Z-7A166-A
220	116425	Bearing W/Races, [ZF6HP26 / 6R60] (Rear Sun Gear to Planet) (.156" Thick) (2.048"OD) (1.345"ID)	1	
221	116447	Race, [ZF6HP26 / 6R60] (Rear Sun Gear to Planet) (.127" Thick) (1.970"OD) (1.382"ID)	1	
221	116442	Race, [6R60] (Rear Sun Gear to Planet) (.039" Thick) (1.900"OD) (1.333"ID) 2006-Up	1	
223	116418A	Bearing W/Races, [ZF6HP26] (Overdrive Clutch Hub to Forward Clutch) (.163" Thick) (2.045"OD) (1.383"ID) 2005-Up	1	5L7Z-7L495-A
223	116424	Bearing W/Races, [6R60] (Overdrive Clutch Hub to Forward Clutch Hub) (.190" Thick) (2.040"OD) (1.247"ID)	1	
225	116419A	Bearing W/Races, [ZF6HP26] (Center Support to Sun Gear) (.144" Thick) (2.668"OD) (1.86"ID) 2005-Up	1	5L7Z-7F405-A
225	116419	Bearing W/Races, [6R60] (Center Support to Sun Gear) (2.925"OD) (1.994"ID) 2006-Up	1	6L2Z-7C041-BA
226	116443	Race, [6R60] (Center Support to Sun Gear) (Flat) (.058" Thick) (2.434"OD) (2.015"ID) 2006-Up	1	6L2Z-7F405-A
226	116443A	Race, [6R60] (Center Support to Sun Gear) (Flat) (.066" Thick) (2.434"OD) (2.015"ID) 2006-Up	1	6L2Z-7F405-B

226	116443B	Race, [6R60] (Center Support to Sun Gear) (Flat) (.073" Thick) (2.434"OD) (2.015"ID) 2006-Up	1	6L2Z-7F405-C
226	116443C	Race, [6R60] (Center Support to Sun Gear) (Flat) (.081" Thick) (2.434"OD) (2.015"ID) 2006-Up	1	6L2Z-7F405-D
226	116443D	Race, [6R60] (Center Support to Sun Gear) (Flat) (.089" Thick) (2.434"OD) (2.015"ID) 2006-Up	1	6L2Z-7F405-E
226	116443E	Race, [ZF6HP26] (Center Support to Sun Gear) (Cupped) (2.870"OD) (2.010"ID) 05-Up	1	5L7Z-7D066-A
229	116420A	Bearing W/Races, [ZF6HP26] (Direct Drum to Center Support) (.135" Thick) (2.625"OD) (1.935"ID) 2005-Up	1	5L7Z-7F373-A
229	116420	Bearing W/Races, [6R60] (Direct Drum to Center Support) (2.705"OD) (1.995"ID) 06-Up	1	6L2Z-7F373-AA
230	116444A	Race, [ZF6HP26] (Direct Drum to Center Support) (2.624"OD) (2.075"ID) 2005-Up	1	
235	116445A	Race, [ZF6HP26] (Forward Clutch Hub to Direct Drum) (2.212"OD) (1.445"ID) 2005-Up	1	
236	116421A	Bearing W/Race, [ZF6HP26] (Forward Clutch Hub to Direct Drum) (2.256"OD) (1.385"ID) 2005-Up	1	5L7Z-7C096-A
236	116421	Bearing W/Races, [6R60] (Forward Clutch Hub to Direct Drum) (.190" Thick) (2.190"OD) (1.394"ID) 2006-Up	1	6L2Z-7C096-AA
237	116446A	Race, [ZF6HP26] (Forward Planet to Overdrive Drum) (.031" Thick) (1.903"OD) (1.37"ID) 2005-Up	1	5L7Z-7072-A
238	116422A	Bearing W/Races, [ZF6HP26] (Forward Planet to Overdrive Drum) (.156" Thick) (2.04"OD) (1.384"ID) 2005-Up	1	5L7Z-7L495-B
238	116422	Bearing W/Races, [6R60] (Forward Planet to Overdrive Drum) (.192" Thick) (2.192"OD) (1.364"ID) 2006-Up	1	6L2Z-7L495-AA
240	116423A	Bearing W/Races, [ZF6HP26] (Forward Sun Gear to Planet) (.186" Thick) (2.039"OD) (1.308"ID) 2005-Up	1	
240	116424	Bearing W/Races, [6R60] (Forward Sun Gear to Planet) (.190" Thick) (2.040"OD) (1.247"ID) 2006-Up	1	6L2Z-7H375-BA
247	116447	Race, [ZF6HP26 / 6R60] (Rear Planet Front Sun Gear to Rear Sun Gear) (.127" Thick) (1.970"OD) (1.382"ID) 2005-Up	2	6L2Z-7D235-AA
248	116425	Bearing W/Races, [ZF6HP26 / 6R60] (Rear Planet Front Sun Gear to Rear Sun Gear) (.156" Thick) (2.048"OD) (1.345"ID)	2	6L2Z-7D234-BA
263	116426A	Caged Needle Bearing, [ZF6HP26] (Output Shaft to Case) (.778" Thick) (2.480"OD) (Cast # RT F-2332851 INA) 2005-Up	1	5L7Z-7A415-A
263	116426	Caged Needle Bearing, [6R60] (Output Shaft to Case) (.778" Thick) (2.480"OD) (Cast # 7A415 FOMOC)	1	
270	116448A	Shim, [ZF6HP26] (Output Shaft to Rear Aluminum Spacer) (.047" Thick) (2.157"OD) (1.55"ID) 2005-Up	1	5L7Z-7N357-A
270	116448B	Shim, [ZF6HP26] (Output Shaft to Rear Aluminum Spacer) (.054" Thick) (2.157"OD) (1.55"ID) 2005-Up	1	5L7Z-7N357-B
270	116448C	Shim, [ZF6HP26] (Output Shaft to Rear Aluminum Spacer) (.063" Thick) (2.157"OD) (1.55"ID) 2005-Up	1	5L7Z-7N357-D
270	116448D	Shim, [ZF6HP26] (Output Shaft to Rear Aluminum Spacer) (.071" Thick) (2.157"OD) (1.55"ID) 2005-Up	1	5L7Z-7N357-E
270	116448E	Shim, [ZF6HP26] (Output Shaft to Rear Aluminum Spacer} (.078" Thick) (2.157"OD) (1.55"ID) 2005-Up	1	5L7Z-7N357-F
270	116448F	Shim, [ZF6HP26] (Output Shaft to Rear Aluminum Spacer) (.086" Thick) (2.157"OD) (1.55"ID) 2005-Up	1	5L7Z-7N357-G
270	116448G	Shim, [ZF6HP26] (Output Shaft to Rear Aluminum Spacer) (.094" Thick) (2.157"OD) (1.55"ID) 2005-Up	1	5L7Z-7N357-H
270	116448H	Shim, [ZF6HP26] (Output Shaft to Rear Aluminum Spacer) (.102" Thick) (2.157"OD) (1.55"ID) 2005-Up	1	5L7Z-7N357-J
270	116448J	Shim, [ZF6HP26] (Output Shaft to Rear Aluminum Spacer) (.110" Thick) (2.157"OD) (1.55"ID) 2005-Up	1	5L7Z-7N357-K
271	116428A	Bearing W/Races, [ZF6HP26] (Output Shaft to Rear Aluminum Spacer) (.200" Thick) (2.315"OD) (1.570"ID) (With 3 Ears) 2005-Up	1	
271	116428	Bearing W/Races, [6R60] (Output Shaft to Rear Steel Spacer) (.190" Thick) (2.352"OD) (1.570"ID) (No Ears) 2006-Up	1	

ZF6HP26 / 6R60 / 6R80 (FORD)

272	116449A	Spacer, [ZF6HP26] (Aluminum) (1.042" Thick) (2.835"OD) (1.560"ID) (Stepped With 2- Threaded Holes) 2005-Up	1	
272	116449	Spacer, [6R60] (4x4) (Steel) (.665" Thick) (2.835"OD) (1.760"ID) (Stepped) (Cast# 6L2P-7A433-BA)	1	6L2Z-7A433-AA
272	116429	Ball Bearing, [6R60] (2WD Case to Output Shaft) 2006-Up	1	6L2Z-7A415-AA
273	116450	Race, [6R60] (2WD Rear Ball Bearing to Yoke) (.039" Thick) (1.733"OD) (1.390"ID) 06-Up	1	6L2Z-7B368-BA
295	116429	Caged Needle Bearing, [ZF6HP26 / 6R60] (Pump Body) (.575" Wide) (2.055"OD) 05-Up	1	
		GASKETS & RUBBER COMPONENTS		
300	116500A	Gasket, [ZF6HP26] (Bottom Pan) (Rubber) (*For Plastic Pan) 2005-Up	1	5L7Z-7A191-AA
300	116500	Gasket, [6R60] (Bottom) (Metal With Bonded Rubber) (*For Metal Pan) 2006-Up	1	
305	116272	Gasket, [6R60] (4x4) (Extension Housing) 2006-Up	1	
309	116268A	Seal / Washer, [ZF6HP26] (Pump Bolt) 2005-Up	14	
311	116516	O-Ring, [ZF6HP26 / 6R60] (Pump Body) 2005-Up	1	
381	116517	O-Ring, [ZF6HP26 / 6R60] (Pump Cover to Case) 2005-Up	1	6L2Z-7A248-CA
385	116265A	Seal, [ZF6HP26] (Rubber Feed Tubes Valve Body to Center Support) (Long) 2005-Up	6	
385	116265	Seal, [6R60] (Rubber Feed Tube Valve Body to Center Support) (1.569" Long With Blue End) 2006-Up	1	6L2Z-7G087-AA
385	116265B	Seal, [6R60] (Rubber Feed Tube Valve Body to Center Support) (1.230" Long With Green End) 2006-Up	1	6L2Z-7G199-AA
385	116265C	Seal, [6R60] (Rubber Feed Tube Valve Body to Center Support) (1.005" Long With Black Ends) 2006-Up	2	6L2Z-7G084-AA
386	116265D	Seal, [ZF6HP26] (Rubber Feed Tubes Valve Body to Center Support) (Short Ones) 05-Up	2	
	116599	Bonded Plate/Gasket, [6R60] (Valve Body Seperator Plate)	1	
	116599A	Bonded Plate/Gasket, [ZF6HP26] (Valve Body Seperator Plate Stamped 1068.327.180)	1	
	116599B	Bonded Plate/Gasket, [ZF6HP26] (Valve Body Seperator Plate Stamped 1068.327.141)	1	
	116599C	Bonded Plate/Gasket, [ZF6HP26] (Valve Body Seperator Plate Stamped 1068.327.179)	1	
	116599D	Bonded Plate/Gasket, [ZF6HP26] (Valve Body Seperator Plate Stamped 1068.327.163)	1	
	116599E	Bonded Plate/Gasket, [ZF6HP26] (Valve Body Seperator Plate Stamped 1068.327.189)	1	
		TECHNICAL MANUALS		
	TMZF6HP26	Technical Manual, [ZF6HP26] 2005-Up	1	ATSG
		ELECTRICAL COMPONENTS		
420	116949A	Solenoid Assembly, [ZF6HP26] (7-Solenoids) 2005-Up	1	
420	116949	Solenoid Assembly, [6R60] (7-Solenoids) 2006-Up	1	6L2Z-7G484-AA
444	116983A	Connector, [ZF6HP26] (Case) (Plastic, Pass Through) 2005-Up	1	5L7Z-7G276-AA
444	116983	Connector, [6R60] (Case) (Plastic, Pass Through) (Cast # 6L2P-7H585-AA) 2006-Up	1	6L2Z-7G276-AA
446	116987A	Circuit Board, [ZF6HP26] (Control Module) 2005-Up	1	
446	116987	Circuit Board, [6R60] (Control Module) (Cast # 6l2P14C247AC) 2006-Up	1	
459	116890A	Bracket, [ZF6HP26] (Holds Solenoids on Valve Body) 2005-Up	1	
		MISCELLANEOUS COMPONENTS		
484	116081A	Oil Sleeve, [ZF6HP26] (Valve Body to Center Support) (Aluminum) (Between Rubber Seals) 2005-Up	4	
492	116082A	Drain Plug, [ZF6HP26] (Plastic) (With Allen Head) 2005-Up	1	
493	116083A	Fill Plug, [ZF6HP26] (Allen Head) 2005-Up	1	5L7Z-7A010-AA
493	116698	Dip Stick, [6R60] (Yellow) (4-15/16" Long) 2006-Up	1	
493	116699	Dip Stick Cover, [6R60] (19mm Hex Head) 2006-Up	1	
		HARD PARTS		
510	116912A	Pump Body W/Gears, [ZF6HP26] (17 Teeth Inner Gear) 2005-Up	1	

510	116912	Pump Body W/Gears, [6R60] (17 Teeth Inner Gear) (Cast # 6L60B) 2006-Up	1	
520	116913A	Pump Cover, [ZF6HP26] (Aluminum) (Cast # 1068) 2005-Up	1	
520	116913	Pump Cover, [6R60] (Aluminum) (Cast # AL9SI1CU) 2006-Up	1	
528	116914A	Stator Housing, [ZF6HP26] (Aluminum) (Cast # 1068 410 041) 2005-Up	1	
528	116914	Stator Housing, [6R60] (Aluminum) (Cast # 03 04 05 06) 2006-Up	1	
529	116918A	Stator Tube, [ZF6HP26] (7" Long) (17-Bolt Holes) 2005-Up	1	
		PUMP COMPONENTS		
530	K116201A	Pump Gear Set, [ZF6HP26] (17 Teeth Inner Gear) (.550" Thick) (2-Lugs For Converter Hub) 2005-Up	1	
		HARD PARTS (Continued)		
550	116732A	Drum W/Shaft, [ZF6HP26] (Overdrive Clutch Drum) (E-Clutch) (With 71 Teeth Forward Planet Ring Gear & 3-Ring Shaft) (6 Clutch) 2005-Up	1	5L7Z-7F207-A
550	116732	Drum W/Shaft, [6R60] (Overdrive Clutch Drum) (E-Clutch) (With 71 Teeth Forward Planet Ring Gear & 2-Ring Shaft) (5 Clutch)	1	6L2Z-7F207-AA
554	116733	Drum, [ZF6HP26 / 6R60] (Forward Clutch) (A-Clutch) (7-7/8"OD) (3.227" Tall) (30 Teeth Steel) (Stamped)	1	6L2Z-7A360-BA
555	116734	Drum, [ZF6HP26 / 6R60] (Direct Clutch) (B-Clutch) (Stamped Steel) (7-5/8" Tall) (30 Teeth Direct Steels) 2005-Up	1	5L7Z-7F283-A
570	116740A	Hub W/Shaft, [ZF6HP26] (Overdrive Clutch) (10-7/8" Long) (.670"OD) (Front Pilot 3/4") (30-Clutch Splines) 2005-Up	1	5L7Z-7F351-A
570	116740	Hub W/Shaft, [6R60] (Overdrive Clutch) (10-7/8" Long) (.670"OD) (Front Pilot 1-1/4" Long) 1/2006-8/2006	1	6L2Z-7F351-D
574	116741	Hub W/Shaft, [ZF6HP26 / 6R60] (Forward Clutch) (11-1/8" Tall) (15-Round Holes) (30-Clutch Splines)	1	6L2Z-7B067-A
575	116742	Hub, [ZF6HP26 / 6R60] (Direct Clutch) (2.235" Tall) (30-Clutch Splines) 2005-06	1	6L2Z-7F236-AA
580	116731A	Planet, [ZF6HP26] (Rear) (Overdrive) (38 Teeth Front Sun Gear & 31 Teeth Rear Sun Gear) (Cast # 1068 332 060 818 on Rear Oil Shield) 2005-Up	1	5L7Z-7D006-A
580	116731	Planet, [6R60] (Rear) (Overdrive) (38 Teeth Front Sun Gear & 31 Teeth Rear Sun Gear) (Cast # 6L2P-7H583-AA on Rear Oil Shield) 2006-Up	1	6L2Z-7D006-AA
582	116747A	Planet, [ZF6HP26] (Forward) (4 Gear) (16 Teeth Pinions) (No Groove) (Stamp Steel) 2005-Up	1	5L7Z-7A398-A
582	116747	Planet, [6R60] (Forward) (3 Gear) (16 Teeth Pinions) (No Groove) (Stamp Steel) (Cast # 6L2P-7H356-AA) 2006-Up	1	6L2Z-7A398-BA
590	116758A	Ring Gear, [ZF6HP26] (Rear Planet) (Overdrive) 2005-Up	1	5L7Z-7A153-A
590	116758	Ring Gear, [6R60] (Rear Planet) (Overdrive) (Cast # 7G211 HB) 2006-Up	1	6L2Z-7A153-B
610	116755A	Sun Gear, [ZF6HP26] (Rear Planet) (Rear Sun Gear) (31 Teeth) (No Groove) (1.595" Thick) (2.372"OD) (Splined ID) (Flat on Front & Rear of Gear) 2005-Up	1	
610	116755	Sun Gear, [6R60] (Rear Planet) (Rear Sun Gear) (31 Teeth) (No Groove) (1.505" Thick) (2.372"OD) (Splined ID) (With Raised Shoulder on Front & Rear) 2006-Up	1	6L2Z-7D063-E
612	116753	Sun Gear, [ZF6HP26 / 6R60] (Forward) (37 Teeth) (1-Groove) (.870" Thick) (2.570"OD) (Splined Inside) 2005-Up	1	6L2Z-7D063-DA
614	116748A	Sun Gear, [ZF6HP26] (Rear Planet) (Front Sun Gear) (38 Teeth) (3-Grooves) (.870" Thick) (2.880"OD) (Splined ID) (Flat on Front & Rear of Gear) 2005-Up	1	
614	116748	Sun Gear, [6R60] (Rear Planet) (Front Sun Gear) (38 Teeth) (3-Grooves) (.870" Thick) (2.880"OD) (Splined ID) (With Raised Shoulder on Front & Rear) 2006-Up	1	6L2Z-7D063-CA
632	116826A	Center Support, [ZF6HP26] (Aluminum) (4-3/4" Thick) (8"OD) (30 Teeth Intermediate Steels) (Cast # 1068)	1	5L7Z-7A130-A
632	116826	Center Support, [6R60] (Aluminum) (4-3/4"Thick) (8"OD) (30 Teeth Intermediate Steels) (Cast # 6L2P-7L328-CC) 2006-Up	1	6L2Z-7A130-A
639	116084	Keyway Lug, [ZF6HP26 / 6R60] (Center Support to Case) (.240" Thick) (.472" Wide) (1.175" Long)	2	5L7Z-7B220-A
678	116851A	Shaft, [ZF6HP26] (Output) (4x4) (7-7/8" Long Shaft) 2005-Up	1	5L7Z-7060-B
678	116851	Shaft, [6R60] (Output) (4x4) (5-7/16" Long Shaft) (20-Parking Lugs) 2006-Up	1	6L2Z-7060-B
698	116085A	Oil Sleeve, [ZF6HP26] (Valve Body to Pump) (Plastic, Dual Squares) 2005-Up	1	

ZF6HP26 / 6R60 / 6R80 (FORD)

698	116085	Oil Sleeve, [6R60] (Valve Body to Pump) (Plastic, Dual Squares) 2006-Up (Cast # 6L2P-7F401-CA)	1	6L2Z-7F401-A
699	116086	Oil Baffle, [6R60] (Forward Planet) (Rear) (Plastic, 6-Tabs) (Cast # 6L2P7H578A) 06-Up	1	6L2Z-7L339-A
740	116754A	Valve Body, [ZF6HP26] (Navigator) (With 7-Solenoids) 2005-Up	1	
740	116754	Valve Body, [6R60] (With 7-Solenoids) (Cast # RF6L2P-7A101-DA on Filter Side) (Cast # RF6L2P-7A092-DA on Case Side) (Serial Plate # 6L2P-7Z490-FB) 2006-Up	1	
741	116683	Manual Valve, [ZF6HP26] (5-3/8" Long) (.590"OD) (With 5-Spools) 2005-Up	1	
760	116701A	Case, [ZF6HP26] (Navigator) (5.4L Engine) 2005-Up	1	5L7Z-7005-A
760	116701D	Case, [6R60] (4.6L) (4x4) 2006-Up	1	
760	116701	Case, [6R60] (4.6L) (2WD) 2006-Up	1	
761	116955A	Thermal By-Pass Valve, [ZF6HP26] (Sets In Case) (Valve & Spring) 2005-Up	1	
761	116955	Thermal By-Pass Valve, [6R60] (Sets In Case) (Valve, Spring & Sleeve) 2006-Up	1	
765	116710A	Pan, [ZF6HP26] (Bottom) (Plastic) (With Filter Made Into the Pan) (Navigator 2005-06)	1	5L7Z-7A194-AA
765	116710C	Pan, [ZF6HP26] (BMW / Jaguar) (Bottom) (With Pan Gasket & Filter)	1	
765	116801	Pan, [6R60] (Bottom) (Metal) (21-Bolt) 2006-Up	1	
770	116704A	Extension Housing, [ZF6HP26] (4x4) (Cast Iron) (5-3/16" Long) (With 2-Threaded Bossed) 2005-Up	1	
770	116704D	Extension Housing, [6R60] (4x4) (Cast Iron) 2006-Up	1	
798	116948	Nut, [6R60] (Holds 2WD Yoke to Output Shaft) (12 Point) 2006-Up	1	
841	116951	Yoke, [6R60] (2WD) (4-Bolt) 2006-Up	1	
	K116928	Kit, Snap Ring, [ZF6HP26 / 6R60] 2005-Up	1	
960	116762A	Piston, [ZF6HP26] (Overdrive Clutch) (Aluminum) (1.345" Thick) (5.100"OD) (1.485"ID) (Cast # 1 068 471 037) 2005-Up	1	5L7Z-7A262-E
960B	116862A	Piston/Retainer, [ZF6HP26] (Overdrive Clutch Inner) (Steel) (4.812"OD) (1.385"ID) (Smooth Where Snap Ring #862 Sits) 2005-Up	1	5L7Z-7H360-B
960B	116862	Piston/Retainer, [6R60] (Overdrive Clutch Inner) (Steel) (4.812"OD) (1.385"ID) (With 4-Humps Where Snap Ring #862 Sits) 2005-Up	1	6L2Z-7H360-BA
960	116762	Piston, [6R60] (Overdrive Clutch) (Aluminum) (1.330" Thick) (5.100"OD) (1.485"ID) (Cast # RF7L1P-7G418-BA) 2006-Up	1	6L2Z-7A262-A
962	116763A	Piston, [ZF6HP26] (Intermediate Clutch) (Aluminum) .(686" Thick) (7-3/8"OD) (5.645"ID) (Cast # 1068475016) 2005-Up	1	5L7Z-7E005-A
962	116763	Piston, [6R60] (Intermediate Clutch) (Aluminum) (.910" Thick) (7-5/16"OD) (5.634"ID) (Cast # RF6L2P-7J015-BA) 2006-Up	1	6L2Z-7E005-BA
964	116764A	Piston, [ZF6HP26] (Forward Clutch) (Aluminum) (7-5/16"OD) (3.040"ID) 2005-Up (Cast # 1068 470 044)	1	5L7Z-7A262-D
964B	116864A	Housing, [ZF6HP26] (Forward Clutch Piston) (7-1/16"OD) (1.355" Tall) (Splined ID) (With 4 Gear Planet #582) 2005-Up	1	5L7Z-7H360-C
964B	116864	Housing, [6R60] (Forward Clutch Piston) (7-1/16"OD) (1.355" Tall) (Splined ID) (Cast # 6L2P-7H360-AA) (With 3 Gear Planet #582) 2006-Up	1	6L2Z-7H360-AA
964	116764	Piston, [6R60] (Forward Clutch) (Aluminum) (7-5/16"OD) (3.040"ID) 2006-Up (Cast # RF6L2P-7L140-AA)	1	6L2Z-7A262-EA
965	116765A	Piston, [ZF6HP26] (Direct Clutch) (Outer) (Aluminum & Steel) (8-Square Holes) (2-3/4" Thick) (7-3/16"OD) (1.995"ID) (Cast # 1068 472 041) 2005-Up	1	5L7Z-7A262-C
965B	116767A	Inner Piston, [ZF6HP26] (Direct Clutch) (Aluminum) (10-Lugs In the Center) (4.635"OD) (1.940"ID) (Cast # 1068 472 035) 2005-Up	1	5L7Z-7H360-A
965B	116767	Inner Piston, [6R60] (Direct Clutch) (Aluminum) (10-Lugs In the Center) (4.635"OD) (1.940"ID) (Cast # RF612P-7H359-AA) 2006-Up	1	6L2Z-7H359-AA
965	116765	Piston, [6R60] (Direct Clutch) (Outer) (Aluminum & Steel) (8-Square Holes) (2-3/4" Thick) (7-3-16"OD) (1.995"ID) (Cast # RF6L29-7C117-AA) 2006-Up	1	6L2Z-7A262-DA
967	116766A	Piston, [ZF6HP26] (Low / Reverse Clutch) (Steel) (.970" Thick) (7-3/16"OD) (2.45"ID) 2005-Up	1	5L7Z-7A262-B
967B	116768A	Inner Piston, [ZF6HP26] (Low / Reverse Clutch) (Aluminum) (1.055" Thick) (3.848"OD) (2.39"ID) 2005-Up	1	5L7Z-7A262-A

ZF6HP26 / 6R60 / 6R80 (FORD)

967	116766	Piston, [6R60] (Low / Reverse Clutch) (Aluminum) (.856" Thick) (7-3/16"OD) (2.465"ID) (Cast # RF6L2P-7D343-CA) 2006-Up	1	6L2Z-7A262-CA
970	116872	Spring, [ZF6HP26 / 6R60] (Overdrive Clutch Piston Return) (.079" Thick) (4.480"OD) (19-Fingers) 2005-Up	1	6L2Z-7B070-AA
972	116873	Spring, [ZF6HP26 / 6R60] (Intermediate Clutch Return) (.080" Thick) (7"OD) (12-Fingers) 2005-Up	1	5L7Z-7B070-E
974	116874	Spring, [ZF6HP26 / 6R60] (Forward Clutch Return) (10-Fingers) (.082" Thick) (5.625"OD) 2005-Up	1	6L2Z-7A480-AA
975	116875	Spring, [ZF6HP26 / 6R60] (Direct Clutch Piston Return) (.098" Thick) (2.140"OD) 05-Up	1	6L2Z-7B488-AA
977	116876A	Spring, [ZF6HP26] (Low / Reverse Clutch Piston Return) (.062" Thick) (5.700"OD) (12-Fingers) 2006-Up	1	5L7Z-7B070-B
977	116876	Spring, [6R60] (Low / Reverse Clutch Piston Return) (.078" Thick) (5.630"OD) (12-Fingers) 2006-Up	1	6L2Z-7B070-BA
982	116863	Retainer, [ZF6HP26 / 6R60] (Intermediate Clutch Piston) (Steel) (.700" Thick) (5.463"OD) (3.55"ID) 2005-Up	1	6L2Z-7B043-AA
985	116681	Spacer, [ZF6HP26 / 6R60] (Under Snap Ring #879) (.083" Thick Stepped to .052" Thick)	1	6L2Z-7A527-AA
991	K116676	Linkage Assembly, [ZF6HP26 / 6R60] (Internal) 2005-Up	1	
992	116675A	Manual Shaft, [ZF6HP26] (With External Lever) (Lever is Welded to Shaft) 2005-Up	1	5L7Z-7A256-A
992	116675	Manual Shaft, [6R60] (With External Lever) (Lever Bolts onto the Shaft) 2006-Up	1	6L2Z-7C493-AA
995	K116678A	Park Pawl Assembly, [ZF6HP26] (4-Pieces) 2005-Up	1	
995	K116678	Park Pawl Assembly, [6R60] (4-Pieces) (Cast # 6L2P-7A441-BA) 2006-Up	1	
999	K116679	Oil Tube Set, [ZF6HP26] (4-Pieces) 2005-Up	1	

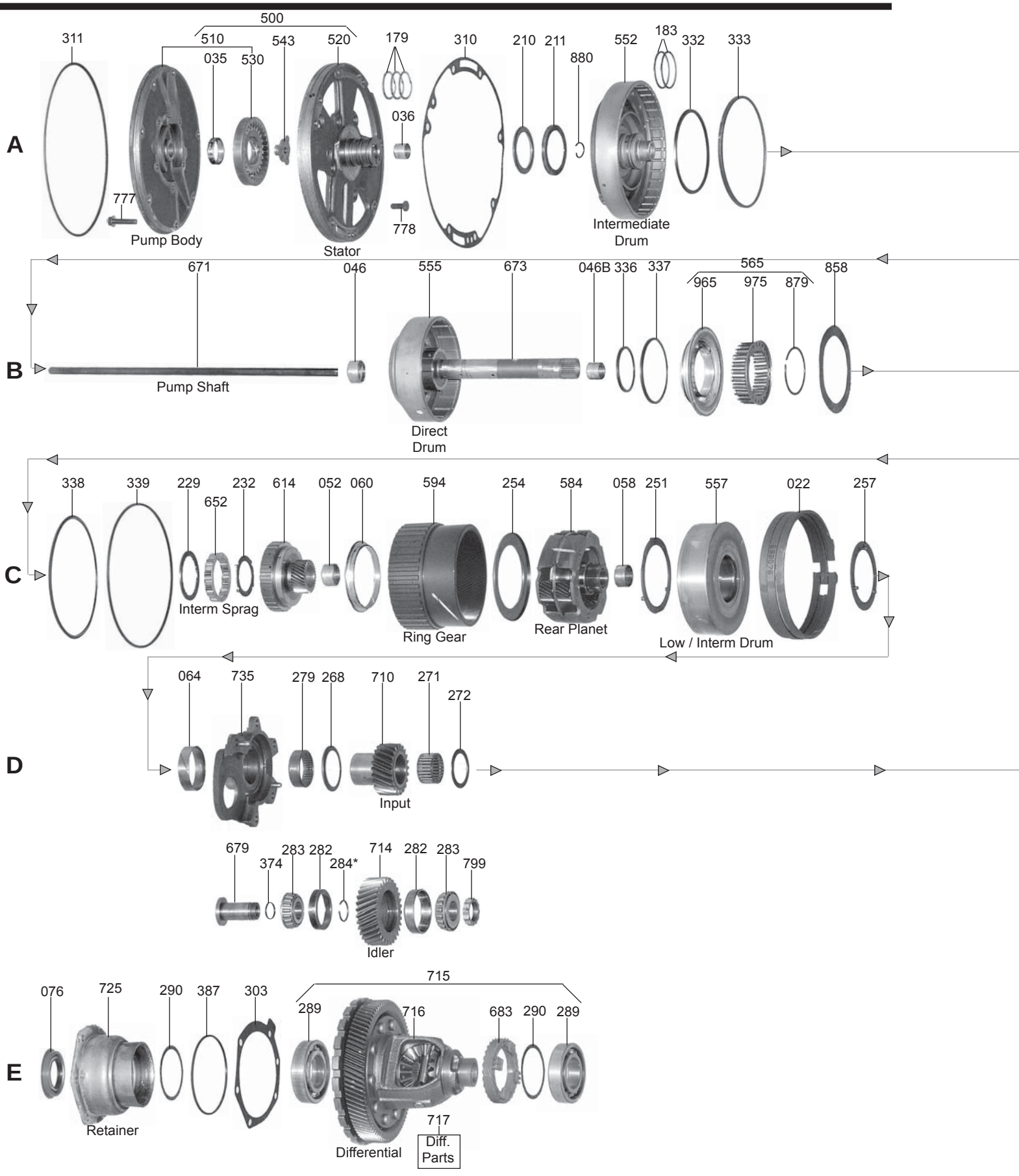
A
311
500
510
035
530
543
520
179
036
778
310
210
211
880
552
183
332
333
777
Pump Body
Stator
Intermediate Drum
B
671
046
555
673
046B
336
337
565
965
975
879
858
Pump Shaft
Direct Drum
C
338
339
229
652
232
614
052
060
594
254
584
058
251
557
022
257
Interm Sprag
Ring Gear
Rear Planet
Low / Interm Drum
D
064
735
279
268
710
271
272
Input
679
374
283
282
284*
714
282
283
799
Idler
E
076
725
290
387
303
715
289
716
683
290
289
717
Retainer
Differential
Diff. Parts

FWD 3 Speed

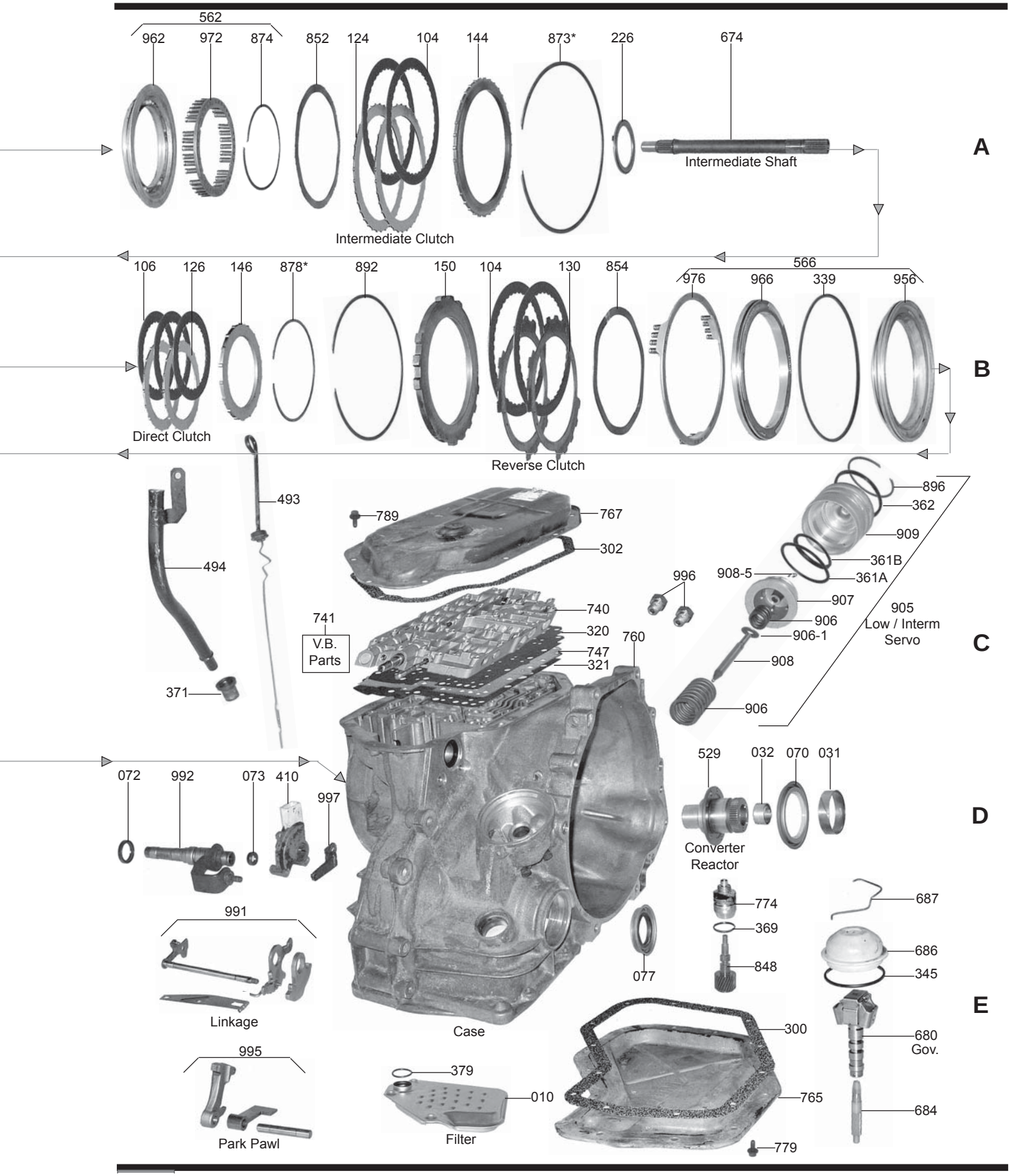
562
962
972
874
852
124
104
144
873*
226
674
Intermediate Shaft
Intermediate Clutch
A
106
126
146
878*
892
150
104
130
854
566
976
966
339
956
Direct Clutch
Reverse Clutch
B
493
494
371
789
767
302
741
V.B. Parts
740
320
747
321
760
996
908-5
896
362
909
361B
361A
907
906
906-1
908
906
905
Low / Interm Servo
C
072
992
073
410
997
991
Linkage
995
Park Pawl
529
032
070
031
Converter Reactor
D
774
369
848
077
687
686
345
680
Gov.
684
300
765
779
379
010
Filter
Case
E

ATX

ILL#	PART#	DESCRIPTION	QTY	REF #
		OVERHAUL KITS		
	K86900	Overhaul Kit, [ATX] (With Steel Rings) 1981-Up	1	
	K86900T	Overhaul Kit, [ATX] (With Teflon Rings) 1981-Up	1	
		MASTER L/STEEL KIT		
	DK8600-S	Master L/Steels Kit, [ATX] 1981-91	1	
	DK8600A-S	Master L/Steels Kit, [ATX] 1992-Up	1	
		MASTER W/STEEL KIT		
	DK8600	Master W/Steels Kit, [ATX] 1981-91	1	
	DK8600A	Master W/Steels Kit, [ATX] 1992-Up	1	
		FILTER		
010	86422	Filter, [ATX] 1981-Up	1	E9FZ-7A098-A
		FILTER KIT		
	FK86422	Filter Kit, [ATX] 1981-Up	1	
		MISC. FILTERS		
	86423	Filter, [ATX] (Governor)	1	E1FZ-7E242-A
		BANDS		
022	86320	Band, [ATX] (Low / Intermediate) 1981-84	1	E1FZ-7D034-B
022	86320A	Band, [ATX] (Low / Intermediate) 1985-Up	1	E9FZ-7D034-A
		BUSHINGS		
	K86905	Bushing Kit, [ATX] 1981-Up	1	
031	86001	Bushing, [ATX] (Converter Hub) 1981-Up	1	E1EP-7N805-A
032	86011	Bushing, [ATX] (Converter Reactor) 1981-Up	1	E1EP-7F437-A
035	86000	Bushing, [ATX] (Inner Pump Gear) 1981-Up	1	E1EP-7B259-A
036	86002	Bushing, [ATX] (Stator) 1981-Up	1	
046	86005	Bushing, [ATX] (Direct Drum) 1981-Up	1	E1EP-7F233-A
046	86005X	Bushing, [ATX] (Direct Clutch) (Oversize) 1981-Up	1	
046B	86004	Bushing, [ATX] (Turbine Shaft) 1981-Up	1	E1EP-7F214-A
052	86006	Bushing, [ATX] (Sun Gear) 1981-Up	1	E1EP-7D065-A
058	86006	Bushing, [ATX] (Planet) 1981-Up	1-2	E1EP-7D065-A
060	86003	Bushing, [ATX] (Planet Ring Gear) (Top Hat Style) 1981-Up	1	E1EP-7F440-A
064	86010	Bushing, [ATX] (Transfer Housing) 1981-Up	1	E1EP-7F366-A
		METAL CLAD SEALS		
070	86151	Seal, [ATX] (Front) 1981-Up	1	E6FZ-7F401-A
072	86153	Seal, [ATX] (Linkage) 1981-Up	1	E1FZ-7B498-A
073	76511	Seal, [ATX] (Throttle Lever) 1981-Up	1	E0AZ-7F337-A
076	86152	Seal, [ATX] (Axle) (Both) 1981-Up	1-2	E1FZ-1177-A
077	86152	Seal, [ATX] (Axle) (Differential Retainer Side) 1981-Up	1	EF1Z-1177-A
		FRICTION CLUTCH		
104	86504	Friction, [ATX] (Intermediate & Reverse Clutch) (.078") 1981-91	4-6	E1FZ-7B164-B
104	86504A	Friction, [ATX] (Intermediate & Reverse Clutch) (.078") 1992-Up (Smaller ID)	4-6	F23Z-7B164-B
106	86304	Friction, [ATX] (Direct Clutch) (.076") 1981-Up	3-4	E1FZ-7B164-A
	K86100	Friction Module, [ATX] 1981-91	1	
	K86100A	Friction Module, [ATX] 1992-Up	1	

		STEEL CLUTCH		
124	86405	Steel, [ATX] (Intermediate Clutch) (.070") (6-5/8"ID) 1981-91	2-3	E2FZ-7B442-A
124	86405A	Steel, [ATX] (Intermediate Clutch) (.070") (6-1/16"ID) 1992-Up	3	F23Z-7B442-A
126	86305	Steel, [ATX] (Direct Clutch) (.070") 1981-Up	3-4	E1FZ-7B442-A
130	86505	Steel, [ATX] (Reverse Clutch) (.070") (6.37" ID) 1981-91	2-3	E1FZ-7B442-C
130	86505A	Steel, [ATX] (Reverse Clutch) (.070") (Smaller ID) (6.14" ID) 1992-Up	3	F23Z-7B442-B
	K86110	Steel Module, [ATX] 1981-91	1	
	K86110A	Steel Module, [ATX] 1992-Up	1	
		CLUTCH PRESSURE PLATES		
144	86414	Pressure Plate, [ATX] (Intermediate Clutch) (6-5/8"ID) 1981-91	1	E23Z-7B066-A
144	86414A	Pressure Plate, [ATX] (Intermediate Clutch) (6-1/16"ID) 1992-Up	1	
146	86415	Pressure Plate, [ATX] (Direct Clutch) 1981-Up	1	E1FZ-7B066-A
150	86416	Pressure Plate, [ATX] (Reverse Clutch) 1981-Up	1	F23Z-7B066-B
		VALVE BODY KITS		
	K86908S	Valve Body Kit, [ATX] 1981-Up	1	Superior
	K86908	Shift Kit, [ATX] 1981-Up	1	Transgo
		OIL SEALING RINGS		
	K86902	Ring Kit, [ATX] (5-Metal) 1981-Up	1	
	K86901	Ring Kit, [ATX] (5-Teflon) 1981-Up	1	
179	86210	Ring, [ATX] (Intermediate Clutch) (2.072"OD) (Metal) 1981-Up	3	E1FZ-7D020-A
179	86210T	Ring, [ATX] (Intermediate Clutch) (2.072"OD) (Teflon) 1981-Up	3	E1FZ-7D020-A
183	86211	Ring, [ATX] (Direct Clutch) (1.572"OD) (Metal) 1981-Up	2	E1FZ-7D019-A
183	86211T	Ring, [ATX] (Direct Clutch) (1.572"OD) (Teflon) 1981-Up	2	E1FZ-7D019-A
		WASHERS & BEARINGS		
	K86907	Washer Kit, [ATX] 1981-Up	1	
	K86906	Bearing Kit, [ATX] (Torrington) 1981-Up	1	
210	86409	Washer, [ATX] (Stator) (.046") (# EA) 1981-Up	1	E1FZ-7D014-E
210	86409A	Washer, [ATX] (Stator) (.060") (# AA) 1981-Up	1	E1FZ-7D014-A
210	86409B	Washer, [ATX] (Stator) (.064") (# BA) 1981-Up	1	E1FZ-7D014-B
210	86409C	Washer, [ATX] (Stator) (.072") (# CA) 1981-Up	1	E1FZ-7D014-C
210	86409D	Washer, [ATX] (Stator) (.080") (# DA) 1981-Up	1	E1FZ-7D014-D
211	86406E	Bearing W/Races, [ATX] (Stator to Intermediate Drum) (.140") (*Replaces Original Washer) 1981-Up	1	E1FZ-7F374-A
211	86406A	Bearing W/Races, [ATX] (Stator to Intermediate Drum) (.187") (*Replaces Original Washer) 1981-Up	1	
211	86406B	Bearing W/Races, [ATX] (Stator to Intermediate Drum) (.196") (*Replaces Original Washer) 1981-Up	1	
211	86406C	Bearing W/Races, [ATX] (Stator to Intermediate Drum) (.204") (*Replaces Original Washer) 1981-Up	1	
211	86406D	Bearing W/Races, [ATX] (Stator to Intermediate Drum) (.212") (*Replaces Origonal Washer) 1981-Up	1	
226	86461	Bearing, [ATX] (Intermediate Drum to Direct Drum) 1981-92	1	E1FZ-7F373-A
226	86461A	Washer, [ATX] (Intermediate Drum to Direct Drum) 1992-Up	1	
229	86449	Bearing, [ATX] (Direct Drum to Sprag) 1981-Up	1	E1FZ-7A623-A
232	86427	Washer, [ATX] (Direct Drum to Sun Gear) (4-Tab) 1981-Up	1	E1FZ-7F369-A
251	86428	Washer, [ATX] (Planet to Sun Gear Drum) (Front) (3-Tab) 1981-Up	1	E1FZ-7D423-A
254	86467	Bearing, [ATX] (Ring Gear to Planet) (Rear) 1981-Up	1	E1FZ-7F473-A
257	86431	Washer, [ATX] (Low / Intermediate Drum to Final Drive Housing) (3-Tab) 1981-Up	1	E1FZ-7F368-A

268	86465	Bearing, [ATX] (Final Drive Gear to Final Drive Housing) 1981-Up	1	E1FZ-7F405-A
271	86464	Caged Needle Bearing, [ATX] (Final Drive Input Gear) (.775" Long) 1981-E83	1	E1FZ-7F403-A
271	86464A	Caged Needle Bearing, [ATX] (Final Drive Input Gear) (.845" Long) L1983-Up	1	F2FZ-7F403-A
272	86463	Bearing, [ATX] (Final Drive Gear to Case) 1981-Up	1	E1FZ-7F404-A
	86125LRB	Axle Stabilizer, [ATX] 1981-Up	1	Teckpak
279	86099	Caged Needle Bearing, [ATX] (Final Drive Housing to Input Gear) 1981-Up	1	E1FZ-7F380-A
282	86439C	Cup Race, [ATX] (Idler Gear) (*Fits 31 & 39 Teeth Gears) 1981-Up	2	JLM67041P
283	86439B	Cone Bearing, [ATX] (Idler Gear) (*Fits 31 & 39 Teeth Gears) 1981-Up	2	JLM67020P
284	86539-Z5	Shim Kit, [ATX] (Idler Gear) (.005") (10 Per Pack) 1981-Up	1	Sonnax
289	86098	Cone Bearing W/Race, [ATX] (Differential) (Both Sides) 1981-E83	2	E1FZ-4221-B
289	86097	Ball Bearing, [ATX] (Differential) (Both Sides) L1983-Up	2	E3FZ-4221-B
290	86444	Shim, [ATX] (Differential Ball Bearings) (Both Sides) L1983-Up	2	E3FZ-4067-A
		GASKETS & RUBBER COMPONENTS		
300	86500	Gasket, [ATX] (Bottom Pan) (Cork) 1981-Up	1	
300	86500**D**or **F**	Gasket, [ATX] (Bottom Pan) (Fiber) **(D-Duraprene** or **F-Farpack)**	1	
302	86501	Gasket, [ATX] (Control Cover) (Top Pan) (Cork) 1981-Up	1	E1FZ-7F396-A
302	86501F	Gasket, [ATX] (Control Cover) (Top Pan) (Fiber) (Farpack)	1	
310	86502	Gasket, [ATX] (Pump) 1981-Up	1	E1FZ-7A136-A
311	86503	O-Ring, [ATX] (Pump) 1981-Up	1	E1FZ-7A248-A
320	86525	Gasket, [ATX] (Valve Body) (Upper) 1981-Up	1	E8FZ-7D100-A
320	86525X	Gasket, [ATX] (Valve Body) (Upper) (.015" Thick) 1981-Up	1	
321	86526	Gasket, [ATX] (Valve Body) (Lower) 1981-Up	1	E8FZ-7C155-A
321	86526X	Gasket, [ATX] (Valve Body) (Lower) (.015" Thick) 1981-Up	1	
332	86531	Lip Seal, [ATX] (Intermediate Clutch) (Inner) 1981-Up	1	E1FZ-7F225-A
333	86530	Lip Seal, [ATX] (Intermediate Clutch) (Outer) 1981-Up	1	E1FZ-7F224-A
336	86533	Lip Seal, [ATX] (Direct Clutch) (Inner) 1981-Up	1	E5FZ-7C099-A
337	86532	Lip Seal, [ATX] (Direct Clutch) (Outer) 1981-Up	1	
338	86535	Lip Seal, [ATX] (Reverse Clutch) (Inner) 1981-Up	1	E1FZ-7D404-A
339	86534	Lip Seal, [ATX] (Reverse Clutch) (Outer) 1981-Up	1	E1FZ-7D403-A
339	86546	Seal, [ATX] (Reverse Clutch Housing) (Outer) 1981-Up	1	E1FZ-7A548-A
345	86545	Seal, [ATX] (Governor Cover) 1981-Up	1	N801011-S
361	86540	Lip Seal, [ATX] (Low / Intermediate Servo) (Large) 1981-Up	1	E1FZ-7D024-A
361	86539	Lip Seal, [ATX] (Low / Intermediate Servo) (Small) 1981-82	1	E1FZ-7D025-A
361	86539A	Lip Seal, [ATX] (Low / Intermediate Servo) (Small) (2.281"ID) 1983-84	1	E3FZ-7D025-A
361	86539B	Lip Seal, [ATX] (Low / Intermediate Servo) (Small) (2.309"ID) 1985-Up	1	E4FZ-7D025-A
361	86539C	Lip Seal, [ATX] (Low / Intermediate Servo) (Small) 1985-Up	1	E5FZ-7D025-A
361	86539D	Lip Seal, [ATX] (Low / Intermediate Servo) (Small) (2.281"ID) 1986-Up	1	E6FZ-7D025-A
362	86542	O-Ring, [ATX] (Low / Intermediate Servo Cover) 1981-Up	2-3	E1FZ-7D026-A
369	3544	O-Ring, [ATX] (Speed-O Housing) 1981-Up	1	E0AZ-7F337-A
371	3291	O-Ring, [ATX] (Filler Tube) 1981-82	1	6264902
371	3292	Boot, [ATX] (Filler Tube) 1983-Up	1	1259475
374	86548	O-Ring, [ATX] (Idler Gear Shaft) 1981-Up	1	N800679-S
379	86543	Seal, [ATX] (Oil Filter Gasket) 1981-Up	1	E1FZ-7E062-A
387	86549	O-Ring, [ATX] (Differential Retainer) 1981-Up	1	
		TECHNICAL MANUALS		
	TMATX	Technical Manual, [ATX] 1981-Up	1	ATSG
		ELECTRICAL COMPONENTS		
410	86947	Neutral Switch, ATX 1981-Up	1	E1FZ-7A247-A

		MISC. COMPONENTS		
	30126	Union, [ATX] (5/16")	1	
	26710	Grommet, [ATX] (Linkage Small)	1	D4AZ-7341-A
	26712	Grommet, [ATX] (Linkage Medium)	1	
	26711	Grommet, [ATX] (Linkage Large)	1	
	26713C	Grommet, [ATX] (Passing Gear) (Narrow Groove) (Green)	1	E0AZ-7F330-A
	26713B	Grommet, [ATX] (Passing Gear) (Wide Groove)	1	
	26713	Grommet, [ATX] (Passing Gear) (Narrow Groove) (Yellow)	1	
	30131	E-Clips, [ATX] (Linkage) 1981-Up	1	
	31289	Retaining Clip, [ATX] (Cooler Line) (Push-in)	1	Teckpak
		HARD PARTS		
500	86424	Pump, [ATX] (Washer Type) (3-Holes For #210) (*Can Use 86424A)	1	E1FZ-7A103-A
500	86424A	Pump, [ATX] (Bearing Type) (*Can Use 86424)	1	
510	86426	Pump Body W/Gears, [ATX] 1981-Up	1	E1AZ-7D043-A
520	86425	Stator, [ATX] (Washer Type) (3-Holes For #210)	1	E6FZ-7A108-A
520	86425A	Stator, [ATX] (Bearing Type)	1	
	86865	Sleeve, [ATX] (Converter Turbine) (Goes Inside Converter) 1981-Up	1	E7SZ-7A878-A
529	86450	Converter Reactor, [ATX] (With 1/2" Converter Splines) 1981-85	1	E1FZ-7A108-A
529	86450A	Converter Reactor, [ATX] (With 7/16" Converter Splines) 1986-L87	1	E6FZ-7A108-A
529	86450B	Converter Reactor, [ATX] (With 1/2" Converter Splines) L1987-Up	1	
530	K86201	Gear Set, [ATX] (Pump) 1981-Up	1	
543	86408	Insert, [ATX] (Oil Pump Drive Gear) 1981-Up	1	E1FZ-7F402-A
552	86411	Drum, [ATX] (Intermediate Clutch) (4 Clutch) 1981-Up	1	E1FZ-7D044-A
552	86411B	Drum, [ATX] (Intermediate Clutch) (6 Clutch) 1983-Up	1	E3FZ-7D044-A
555	86429	Drum, [ATX] (Direct Clutch W/Shaft) (3 Clutch) (*Uses a Bearing # 226) 1981-92	1	E4FZ-7F283-A
555	86429A	Drum, [ATX] (Direct Clutch W/Shaft) (4 Clutch) (*Uses a Bearing # 226) 1981-92	1	E4FZ-7F283-B
555	86429B	Drum, [ATX] (Direct Clutch W/Shaft) (3 Clutch) (*Uses a Washer # 226) 1992-Up	1	
557	86636	Drum, [ATX] (Low / Intermediate With Sun Gear) (52 Teeth) (1st Design) 1981-84	1	E1FZ-7A626-A
557	86636A	Drum, [ATX] (Low / Intermediate With Sun Gear) (56 Teeth) (5/8" Wide) (2nd Design) 84-87	1	E4FZ-7A626-A
557	86636B	Drum, [ATX] (Low / Intermediate With Sun Gear) (56 Teeth) (3/4" Wide) (3rd Design) 88-Up	1	E7FZ-7A626-A
584	86440	Planet, [ATX] (1st Design) (29 Teeth Sun Gear # 614) 1981-E85	1	E1FZ-7A398-A
584	86440A	Planet, [ATX] (2nd Design) (31 Teeth Sun Gear # 614) L1985-86	1	E4FZ-7A398-A
584	86440B	Planet, [ATX] (3rd Design) **"Split"** (31 Teeth Sun Gear # 614) 1987-Up	1	E2FZ-7A398-A
594	86442	Ring Gear, [ATX] (Planet) (1st Design) (29 Teeth Sun Gear # 614) 1981-E85	1	E3FZ-7A153-A
594	86442A	Ring Gear, [ATX] (Planet) (2nd Design) (31 Teeth Sun Gear # 614) L1985-86	1	E4FZ-7A153-A
594	86442B	Ring Gear, [ATX] (Planet) (3rd Design) (31 Teeth Sun Gear # 614) 1987-Up	1	E7FZ-7A153-A
594	86442C	Ring Gear, [ATX] (Planet) (4th Design) (31 Teeth Sun Gear # 614) 1987-Up (Angled Teeth on Inside are 7/8" Long that Plant Rides on)	1	
614	86453	Sun Gear, [ATX] (1st / 3rd / Reverse) (29 Teeth) 1981-E85	1	E3FZ-7N107-A
614	86453A	Sun Gear, [ATX] (1st / 3rd / Reverse) (31 Teeth) L1985-Up	1	E4FZ-7N107-A
614	86453B	Sun Gear, [ATX] (1st / 3rd / Reverse) (31 Teeth) **(*Use With"Split Planet")** 7/1986-Up	1	
		SPRAGS & ONE WAY CLUTCHES		
652	86239	Sprag, [ATX] (Intermediate) 1981-Up	1	E1FZ-7A089-A
		HARD PARTS (Continued)		
671	86409S	Pump Shaft, [ATX] (Oil Pump Drive) 1981-Up	1	E1FZ-7B328-A
674	86410	Shaft, [ATX] (Intermediate) 1981-Up	1	E1FZ-7F351-A

679	86616S	Shaft, [ATX] (Idler) 1981-Up	1	
680	86412	Governor, [ATX] (10 Teeth) (1-Spring) 1981-Up	1	E1FZ-7C053-B
680	86412A	Governor, [ATX] (10 Teeth) (2-Spring) 1981-Up	1	
681	86412-01	Pin, [ATX] (Governor Body to Weights) 1981-Up	2	Sonnax
683	86420	Gear, [ATX] (Speed-O Drive Gear) (2-Lug)	1	E3FZ-17285-B
683	86420B	Gear, [ATX] (Speed-O Drive Gear) (4-Lug)	1	E8FZ-17285-A
683	86420A	Gear, [ATX] (Speed-O Drive Gear) (Split Link) (*For 2-Lug)	1	
684	K86413	Gear, [ATX] (Governor Gear Kit) 1981-Up	1	E2FZ-7F419-A
686	86443A	Cover, [ATX] (Governor) 1981-Up	1	
687	86443B	Retainer, [ATX] (Governor Cover) 1981-Up	1	
710	86615	Gear, [ATX] (Final Drive Input) **(**Specify Tooth Count And Length**)** 1981-Up	1	E3FZ-7F342-A
714	86616	Idler Gear W/Bearing, [ATX] **(**Specify Tooth Count And Bearing Cast #**)** 1981-Up	1	
715	86455A	Differential Assembly, [ATX] (71 Teeth) (Ball Bearing Type) L1983-Up	1	31466-20300
715	86455B	Differential Assembly, [ATX] (83 Teeth) (Ball Bearing Type) L1983-Up	1	
715	86455C	Differential Assembly, [ATX] (86 Teeth) (Tapered Bearing Type) 1981-E83	1	
715	86455	Differential Assembly, [ATX] (86 Teeth) (Ball Bearing Type) L1983-Up	1	
715	86455D	Differential Assembly, [ATX] (88 Teeth) (Ball Bearing Type) (1.029”ID Axle) L1983-Up	1	
715	86455DA	Differential Assembly, [ATX] (88 Teeth) (Ball Bearing Type) (1.112”ID Axle) (23-Splines) L1983-Up	1	
715	86455DB	Differential Assembly, [ATX] (88 Teeth) (Ball Bearing Type) (1.112”ID Axle) (25-Splines) L1983-Up	1	
725	86852	Retainer, [ATX] (Differential) (Aluminum) (Tapered Bearing Type) 1981-E83	1	E1FZ-7F447-A
725	86853	Retainer, [ATX] (Differential) (Aluminum) (Ball Bearing Type) L1983-E85	1	E3FZ-7F447-A
725	86854	Retainer, [ATX] (Differential) (Steel) (Ball Bearing Type) L1985-Up (*Can Use 86853)	1	E5FZ-7F447-A
735	86612	Housing, [ATX] (Final Drive Gear) (Cast # 7F334) 1981-84	1	
735	86612A	Housing, [ATX] (Final Drive Gear) (Cast # RFE2) 1985-86	1	
735	86612B	Housing, [ATX] (Final Drive Gear) (Cast # RE6EP) L1986-Up	1	
		VALVE BODIES (REBUILT)		
740	FD-3305	Valve Body, [ATX] (Planet Type) 1981-Up	1	
740	FD-3306	Valve Body, [ATX] (CLC Type) (6-Check Balls) 1987-Up	1	
740	FD-3307	Valve Body, [ATX] (FLC Type) (7-Check Balls) 1987-Up	1	
		VALVE BODIES		
740	86940	Valve Body, [ATX] 1981-82	1	
740	86940A	Valve Body, [ATX] 1983-86	1	
740	86940C	Valve Body, [ATX] 1987-Up	1	
		VALVE BODY COMPONENTS		
741	86940-01	Sleeve, [ATX] (Throttle Valve Sleeve) (In Valve Body)	1	Sonnax
741	86940-03	Sleeve, [ATX] (Throttle Control Valve Sleeve)	1	Sonnax
741	86940-02	Spring Set, [ATX] (Throttle Control Valve) (5 Per Set)	1	Sonnax
741	86940-05K	Valve & Sleeve, [ATX] (TV Boost)	1	Sonnax
		HARD PARTS (Continued)		
760	86600	Case, [ATX] (1.6L) (With Tapered Differential Bearing) 1981-E83	1	
760	86600A	Case, [ATX] (1.6L) (With Ball Bearing Differential Bearing) L1983-84	1	
760	86600B	Case, [ATX] (1.6L) (With 4-Mounting Holes Above Differential) 1985	1	
760	86600C	Case, [ATX] (1.6L) (With 4-Mounting Holes Above Differential) 1986-Up	1	

760	86600D	Case, [ATX] (2.5L) (Taurus, Sable) 1986-Up	1	
765	86801	Pan, [ATX] (Bottom) (*Early) (Blue) 1981-E85	1	
765	86801A	Pan, [ATX] (Bottom) (*Late) (Gray or Black) L1985-86	1	
765	86801B	Pan, [ATX] (Bottom) 1987-Up	1	
767	86802	Pan, [ATX] (Top) 1981-Up	1	
774	86922	Housing, [ATX] (Driven Speed-O) 1981-Up	1	E7FZ-17K288-A
799	86948	Nut, [ATX] (Idler Gear)	1	
848	86421A	Gear, [ATX] (Driven Speed-O) (23 Teeth) (Blue) 1981-Up	1	E5FZ-17271-A
848	86421B	Gear, [ATX] (Speed-O Driven) (25 Teeth) (Green) 1981-Up	1	E3FZ-17271-A
848	86421C	Gear, [ATX] (Speed-O Driven) (25 Teeth) (Black) 1981-Up	1	E6FZ-17271-A
848	86421D	Gear, [ATX] (Speed-O Driven) (26 Teeth) (Natural) 1981-Up	1	E1FZ-17271-A
852	86810	Cushion, [ATX] (Intermediate Clutch) 1981-Up	1	
854	86811	Cushion, [ATX] (Reverse Clutch) 1981-Up	1	
858	86812	Cushion, [ATX] (Direct Clutch) 1981-Up	1	
	K86928	Snap Ring Kit, [ATX] 1981-Up	1	51680
905	86528	Servo Assembly, [ATX] (Low / Intermediate) (Without Groove Apply Pin) 1981-Up	1	
905	86528A	Servo Assembly, [ATX] (Low / Intermediate) (With 1-Groove Apply Pin) 1981-Up	1	
905	86528B	Servo Assembly, [ATX] (Low / Intermediate) (With 2-Grooves Apply Pin) 1981-Up	1	
905	86528C	Servo Assembly, [ATX] (Low / Intermediate) (With 3-Grooves Apply Pin) (Cast # P) 1981-Up	1	
905	86528D	Servo Assembly, [ATX] (Low / Intermediate) (With 3-Grooves Apply Pin) (Cast # E) 1981-Up	1	
905	86528E	Servo Assembly, [ATX] (Low / Intermediate) (With 4-Grooves Apply Pin) 1981-Up	1	
905	86528E	Servo Assembly, [ATX] (Low / Intermediate) (With 5-Grooves Apply Pin) 1981-Up	1	
906	86891	Spring, [ATX] (Low / Intermediate Servo) 1981-Up	1	
956	86443	Housing, [ATX] (Reverse Piston) 1981-Up	1	
962	86434	Piston, [ATX] (Intermediate Clutch) 1981-Up	1	
965	86435	Piston, [ATX] (Direct Clutch) 1981-Up	1	
966	86441	Piston, [ATX] (Reverse Clutch) 1981-Up	1	
972	86417	Retainer W/Spring, [ATX] (Intermediate Clutch) 1981-Up	1	E3FZ-7F222-A
975	86418	Retainer W/Spring, [ATX] (Direct Clutch) 1981-Up	1	
976	86419	Retainer W/Spring, [ATX] (Reverse Clutch) 1981-Up	1	
991	K86676	Linkage Assembly, [ATX] (Internal) 1981-Up	1	
992	86675A	Shift Lever, [ATX] (External) 1981-83	1	
992	86675B	Shift Lever, [ATX] (External) (Cast # F3) 1984-86	1	
992	86675C	Shift Lever, [ATX] (External) (Cast # F6) 1987-Up	1	
995	K86678	Park Pawl Assembly, [ATX] 1981-Up	1	

AXOD/AXODE/AX4S

FWD 4 Speed

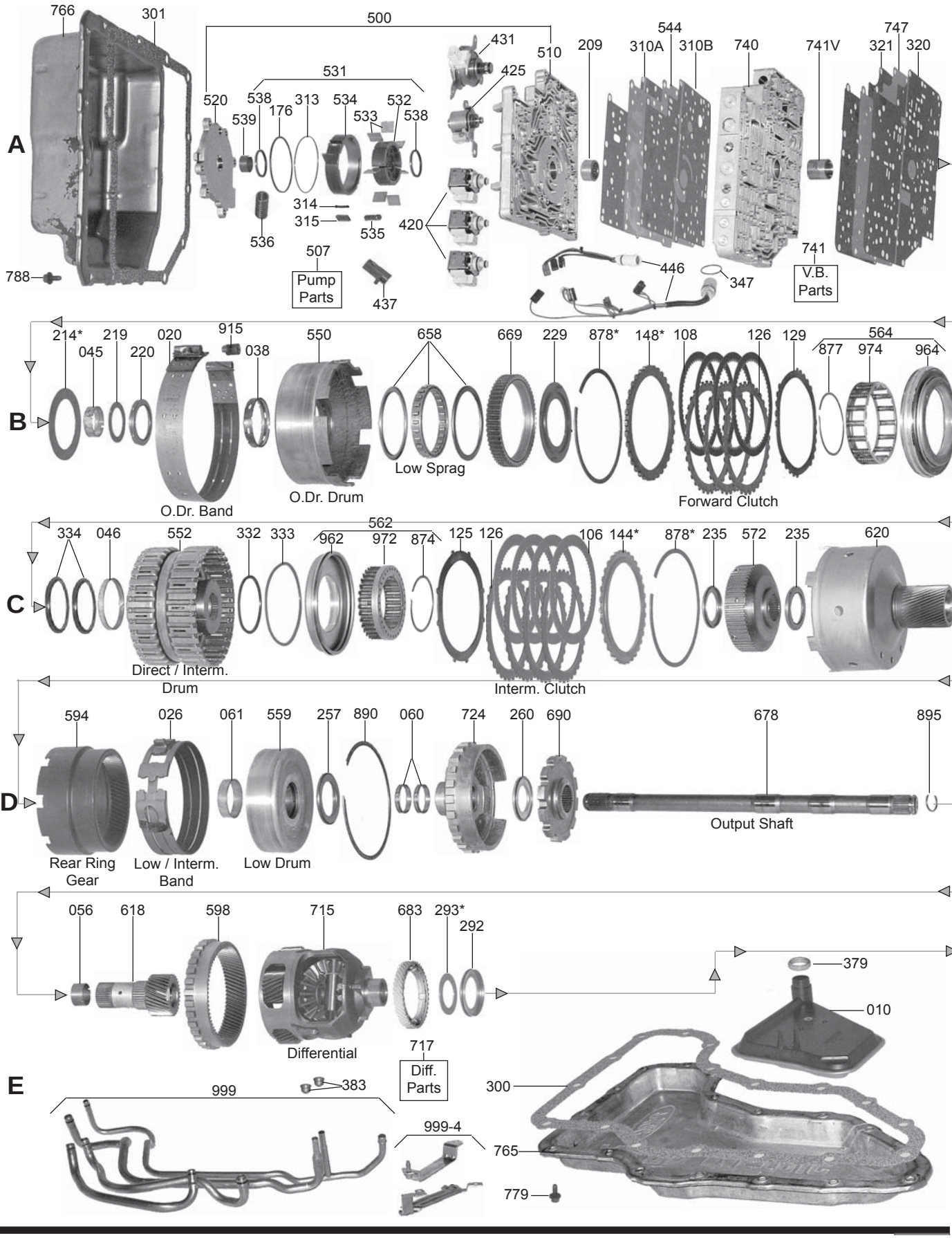

FWD 4 Speed

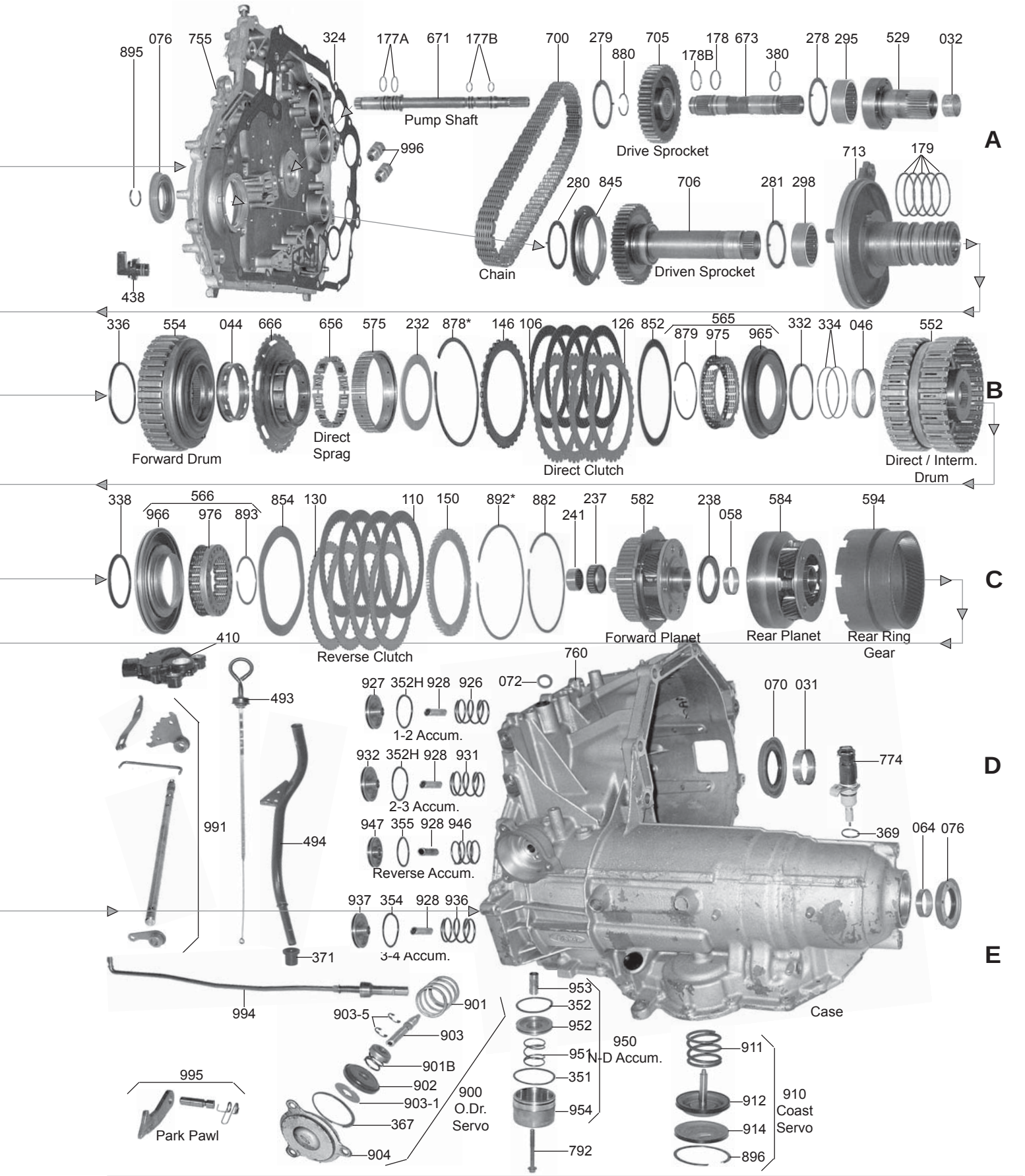
895
076
755
324
177A
671
177B
700
279
880
705
178B
178
673
380
278
295
529
032
Pump Shaft
996
Drive Sprocket
A
713
179
280
845
706
281
298
Chain
Driven Sprocket
438
336
554
044
666
656
575
232
878*
146
106
126
852
565
879
975
965
332
334
046
552
B
Forward Drum
Direct Sprag
Direct Clutch
Direct / Interm. Drum
338
566
966
976
893
854
130
110
150
892*
882
241
237
582
238
058
584
594
C
Reverse Clutch
Forward Planet
Rear Planet
Rear Ring Gear
410
493
760
927
352H
928
926
072
070
031
1-2 Accum.
932
352H
928
931
774
D
2-3 Accum.
991
947
355
928
946
369
064
076
494
Reverse Accum.
937
354
928
936
3-4 Accum.
371
E
994
901
903-5
903
953
352
952
950
N-D Accum.
951
351
954
792
Case
911
995
901B
902
903-1
900
O.Dr.
Servo
912
914
896
910
Coast
Servo
Park Pawl
367
904

AX4N/4F50N

FWD 4 Speed

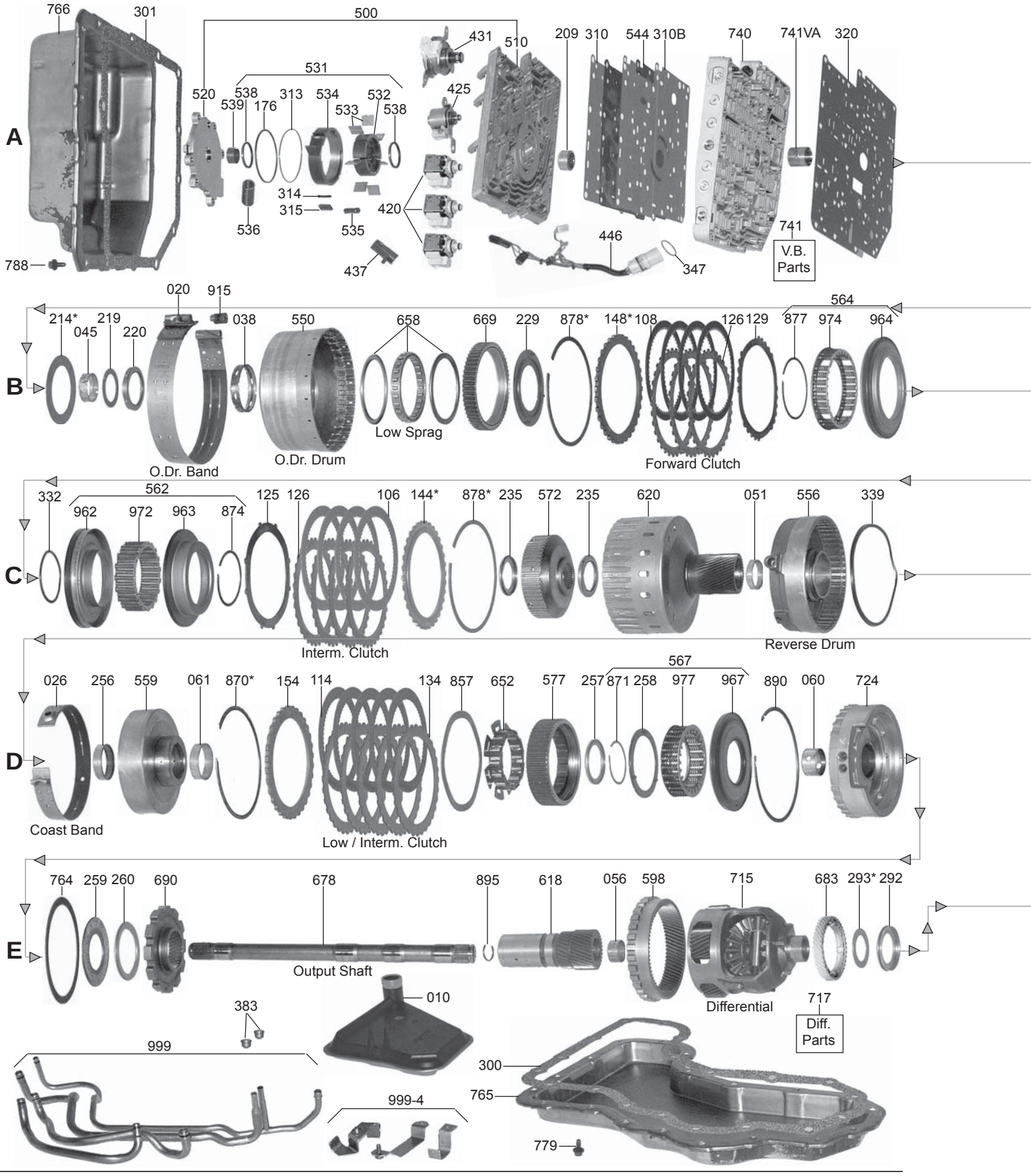

FWD 4 Speed

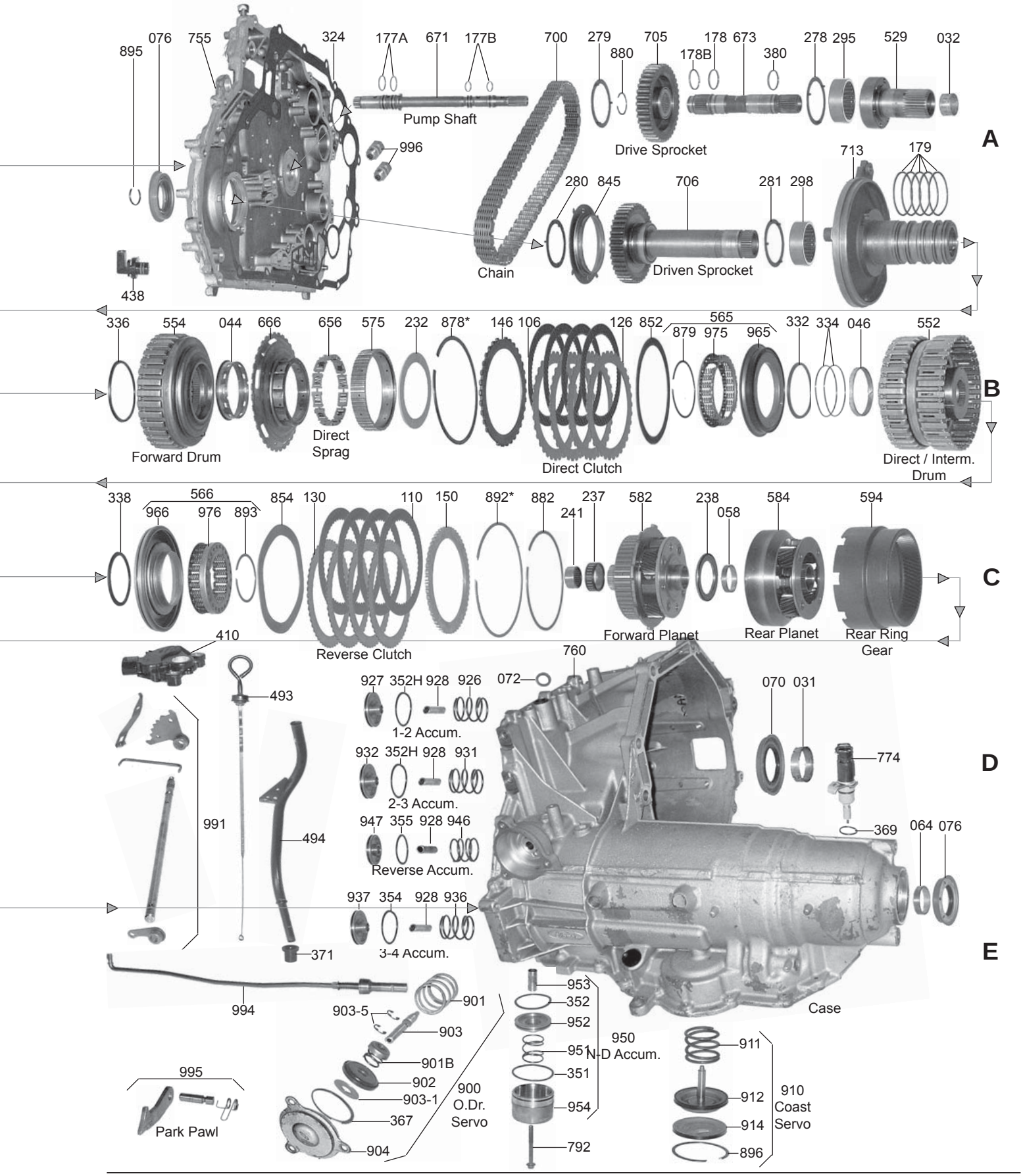
A
B
C
D
E
895
076
755
324
177A
671
177B
700
279
880
705
178
673
178B
380
278
295
529
032
Pump Shaft
996
Drive Sprocket
713
179
280
845
706
281
298
438
Chain
Driven Sprocket
336
554
044
666
656
575
232
878*
146
106
126
852
565
879
975
965
332
334
046
552
Forward Drum
Direct
Sprag
Direct Clutch
Direct / Interm.
Drum
338
566
966
976
893
854
130
110
150
892*
882
241
237
582
238
058
584
594
Reverse Clutch
Forward Planet
Rear Planet
Rear Ring
Gear
410
493
760
927
352H
928
926
072
1-2 Accum.
070
031
932
352H
928
931
2-3 Accum.
774
991
494
947
355
928
946
Reverse Accum.
369
064
076
937
354
928
936
3-4 Accum.
371
994
Case
953
352
952
951
351
954
792
950
N-D Accum.
901
903-5
903
901B
902
903-1
367
904
900
O.Dr.
Servo
911
912
914
896
910
Coast
Servo
995
Park Pawl

AXOD/AXODE/AX4S/AX4N/4F50N

ILL#	PART#	DESCRIPTION	QTY	REF #
		PAPER & RUBBER KIT		
	K96000-1	Paper & Rubber Kit, [AXOD] 1986-90	1	
	K96900E-1	Paper & Rubber Kit, [AXODE / AX4S] 1991-98	1	
	K96900F-1	Paper & Rubber Kit, [AX4N] 1995-99	1	
	K96900L-1	Paper & Rubber Kit, [AX4N / 4F50N] 2000-03	1	
		OVERHAUL KITS		
	K96900	Overhaul Kit, [AXOD] 1986-90	1	
	K96900E	Overhaul Kit, [AXODE / AX4S] 1991-98	1	
	K96900J	Overhaul Kit, [AXODE / AX4S] 1999-Up	1	
	K96900FP	Overhaul Kit, [AX4N] (With Bonded Pistons) 1995-99	1	
	K96900F	Overhaul Kit, [AX4N] (Without Bonded Pistons) 1995-99	1	
	K96900LP	Overhaul Kit, [AX4N / 4F50N] (With Bonded Pistons) 2000-03	1	
	K96900L	Overhaul Kit, [AX4N / 4F50N] (Without Bonded Pistons) 2000-03	1	
	K96900GP	Overhaul Kit, [AX4N / 4F50N] (With Bonded Pistons) 2004-Up	1	
	K96900G	Overhaul Kit, [AX4N / 4F50N] (Without Bonded Pistons) 2004-Up	1	
		MASTER L/STEEL KIT		
	DK9600-S	Master L/Steels Kit, [AXOD] 1986-90	1	
	DK9600B-S	Master L/Steels Kit, [AXODE / AX4S] 1991-95	1	
	DK9600D-S	Master L/Steels Kit, [AXODE / AX4S] (With Hi-Energy Frictions) 1996-98	1	
	DK9600J-S	Master/L/Steels Kit, [AXODE/ AX4S] (With Hi-Energy Frictions) 1999-Up	1	
	DK9600FP-S	Master L/Steels Kit, [AX4N] (With Bonded Pistons) (With Hi-Energy Frictions) 1995-99	1	
	DK9600F-S	Master L/Steels Kit, [AX4N] (Without Bonded Pistons) (With Hi-Energy Frictions) 95-99	1	
	DK9600LP-S	Master L/Steels Kit, [AX4N / 4F50N] (With Bonded Pistons) (With Hi-Energy Frictions) 2000-03	1	
	DK9600L-S	Master L/Steels Kit, [AX4N / 4F50N] (Wthout Bonded Pistons) (With Hi-Energy Frictions) 2000-03	1	
	DK9600GP-S	Master L/Steels Kit, [AX4N / 4F50N] (With Bonded Pistons) (With Hi-Energy Frictions) 2004-Up	1	
	DK9600G-S	Master L/Steels Kit, [AX4N / 4F50N] (Without Bonded Pistons) (With Hi-Energy Frictions) 2004-Up	1	
		MASTER W/STEEL KIT		
	DK9600	Master W/Steels Kit, [AXOD] 1986-90	1	
	DK9600B	Master W/Steels Kit, [AXODE / AX4S] 1991-95	1	
	DK9600D	Master W/Steels Kit, [AXODE / AX4S] (With Hi-Energy Frictions) 1996-98	1	
	DK9600J	Master W/Steels Kit, [AXODE / AX4S] (3.0L) (With Hi-Energy Frictions) 1999-Up	1	
	DK9600M	Master W/Steels Kit, [AXODE / AX4S] (3.8L) (With Hi-Energy Frictions) 1999-Up	1	
	DK9600FP	Master W/Steels Kit, [AX4N] (With Bonded Pistons) (With Hi-Energy Frictions) 1995-99	1	
	DK9600F	Master W/Steels Kit, [AX4N] (Without Bonded Pistons) (With Hi-Energy Frictions) 95-99	1	
	DK9600LP	Master W/Steels Kit, [AX4N / 4F50N] (With Bonded Pistons) (With Hi-Energy Frictions) 2000-03	1	
	DK9600L	Master W/Steels Kit, [AX4N / 4F50N] (Without Bonded Pistons) (With Hi-Energy Frictions) 2000-03	1	
	DK9600GP	Master W/Steels Kit, [AX4N / 4F50N] (With Bonded Pistons) (With Hi-Energy Frictions) 2004-Up	1	

	DK9600G	Master W/Steels Kit, [AX4N / 4F50N] (Without Bonded Pistons) (With Hi-Energy Frictions) 2004-Up	1	
		FILTER		
010	96710	Filter, [AXOD / AXODE / AX4S] (*Except SHO) 1986-95 (.250" Tall) (Orange Lip Seal)	1	E6DZ-7A098-A
010	96712	Filter, [AXODE / AX4S] (SHO 92-95) & [AX4N] 1995-96 (.490" Tall) (Orange Lip Seal)	1	F3DP-7G186-AB
010	96710A	Filter, [AXODE / AX4S] 1996-Up & [AX4N / 4F50N] 1997-Up (.420" Tall) (Green Lip Seal)	1	F6DZ-7A098-A
		FILTER KIT		
	FK96710	Filter Kit, [AXOD / AXODE / AX4S] (*Except SHO) (.250" Tall) (Orange Lip Seal) 86-95	1	
	FK96710A	Filter Kit, [AXODE / AX4S] (.420" Tall) (Green Lip Seal) 1996-Up	1	
	FK96712	Filter Kit, [AX4N] (.500" Tall) (Orange Lip Seal) 1995-96	1	
	FK96710B	Filter Kit, [AX4N] (.420" Tall) (Green Lip Seal) 1997-Up	1	
		MISC. FILTERS		
	96711	Screen, [AXOD / AXODE] (By-Pass Solenoid) 1986-Up	1	E6DZ-7G308-A
	96711A	Screen, [AXOD / AXODE] (1-2 Servo) (Under Valve Body Plate, In The Channel Plate) 1986-Up	1	E9DZ-7H162-A
		BANDS		
020	96700	Band, [AXOD / AXODE / AX4S / AX4N] (Overdrive) 1986-Up	1	E6DZ-7F196-A
026	96701	Band, [AXOD / AXODE / AX4S] (Low Intermediate) (1-2) 1986-94	1	E8DZ-7D034-A
026	96701A	Band, [AX4S] (Low/Intermediate) (1-2) 1995-97	1	F48P-7D034-AB
026	96701B	Band, [AX4S] (Low/Intermediate) (1-2) 1998-Up	1	F88P-7D034-AA
026	96800	Band, [AX4N] (Coast) (1" Wide) 1995-Up	1	F4DP-7A162-A
		BUSHINGS		
	K96901	Bushing Kit, [AXOD / AXODE / AX4S] (14-Bushings) 1988-93	1	
	K96901A	Bushing Kit, [AXODE / AX4S] (13-Bushings) 1993-Up	1	
	K96901B	Bushing Kit, [AX4N] (13-Bushings) 1995-Up	1	
031	96001	Bushing, [AXOD / AXODE / AX4S / AX4N] (Converter Hub)1986-Up	1	E6SP-7N805-AA
032	75003	Bushing, [AXOD / AXODE / AX4S / AX4N] (Converter Reactor) 1986-Up	1	
038	96011	Bushing, [AXOD / AXODE / AX4S / AX4N] (Overdrive Drum) (With 6-Slots) 1986-Up	1	E8DP-7G210-AA
044	96007	Bushing, [AXOD / AXODE / AX4S / AX4N] (Some Inner Sprag Race) (With 12-Slotted Holes) (1/2" Wide)	1	E6SP-7D138-AC
044	96007A	Bushing, [AXODE / AX4S / AX4N] (Some Inner Sprag Race) (With 12-Slotted Holes) (5/8" Wide)	1	F3SP-7G138-AA
045	96008	Bushing, [AXOD / AXODE / AX4S / AX4N] (Driven Sprocket Support) 1986-Up	1	E6SP-7G170-AA
046	96010	Bushing, [AXOD / AXODE / AX4S / AX4N] (Direct / Intermediate Clutch Drum) 1986-Up	1	E6SP-7G123-AA
051	96009	Bushing, [AXOD / AXODE] (Sun Gear Shell) (1.582"OD) 1986-92	2	E6SP-7F209-AA
051	96009A	Bushing, [AXODE / AX4S / AX4N] (Sun Gear Shell) (1.613"OD) 1993-Up	1	
237	96042	Bushing, [AXODE / AX4S / AX4N] (Front Planet Shaft) (Outer) (*Replaces Bearing) 1993-Up	1	
053	96003	Bushing, [AXOD] (In Front Planet Shaft) (Inner) 1986	1	E6SP-7D065-AA
241	96003-01	Needle Bearing, [AXOD / AXODE / AX4S / AX4N] (In Front Planet Shaft) (Inner) 87-Up	1	Sonnax
053	96016	Bushing, [AXOD / AXODE / AX4S / AX4N] (Front Planet Shaft) (Inner) (*Replaces Bearing) 1987-Up	1	AXB
053	96098	Sleeve, [AXODE / AX4S / AX4N] (Aluminum Lube Sleeve) (Between Front Planet & 4th Clutch Hub) 1987-Up	1	AXS
056	96006	Bushing, [AXOD / AXODE / AX4S / AX4N] (Final Drive Sun Gear) 1986-Up	1	E6SP-7G344-AA
058	96014	Bushing, [AXOD / AXODE / AX4S / AX4N] (Rear Planet) 1986-Up	1	E6SP-7B375-AA
060	96005	Bushing, [AXOD] (Differential Support) (Narrow) 1986-87	2	E6SP-7A132-AA
060	96005A	Bushing, [AXOD / AXODE / AX4S] (Differential Support) (Wide) 1988-Up	1	E8SP-7A132-AA

060	96005B	Bushing, [AX4N] (Differential Support) (Wide) 1995-Up	1	F5DP-7A132-AA
061	96004	Bushing, [AXOD / AXODE] (Rear Drum With Sun Gear) (1.974"OD) 1986-91 (*Also [AX4N] 1995-Up)	1	E6SP-7G220-AA
061	96004A	Bushing, [AXODE / AX4S] (Rear Drum With Sun Gear) (2.004"OD) 1992-Up (4-Grooves)	1	
064	96012	Bushing, [AXOD / AXODE / AX4S / AX4N] (Rear Case) 1986-Up	1	E6SP-7E110-AA
		METAL CLAD SEALS		
070	96151	Seal, [AXOD / AXODE / AX4S / AX4N] (Front) 1986-Up	1	E6DZ-7F401-A
072	96154	Seal, [AXOD / AXODE / AX4S / AX4N] (Main Control Shaft) 1986-Up	1	E6DZ-7F337-A
076	96152	Seal, [AXOD / AXODE / AX4S / AX4N] (Axle) (Both) 1986-Up	2	E6DZ-1177-A
079	96153	Seal, [AXOD / AXODE / AX4S / AX4N] (Axle-Viton) (Both) 1994-Up **(*Will Replace 96152 1986-Up)**	2	2F1Z-1177-AB
079	96155	Seal, [AXOD / AXODE / AX4S / AX4N] (Pump Drive) 1986-Up	1	E6SP-7N089-A
		FRICTION CLUTCH		
106	96105	Friction, [AXOD / AXODE / AX4S] (Direct & Intermediate Clutch) (.065") 1986-94	9-10	E6DZ-7B164-A
106	96105A	Friction, [AXODE / AX4S / AX4N] (Direct & Intermediate Clutch) (.065") (Hi-Energy) 1995-Up	9-10	XF2Z-7B164-CA
106	96105B	Friction, [AX4S / AX4N] (Direct & Intermediate Clutch) (.065") (Hi-Energy) 2000-Up	9-10	
108	96103	Friction, [AXOD / AXODE] (Forward Clutch) (Hi-Energy) (.065") (52 Teeth) 1986-E91	4	E6DZ-7B164-B
108	96103A	Friction, [AXODE / AX4S / AX4N] (Forward Clutch) (Hi-Energy) (.065") (57 Teeth) L1991-Up	4	F2DZ-7B146-A
110	96109	Friction, [AXOD / AXODE / AX4S / AX4N] (Reverse Clutch) (.069") 1986-Up	4	E6DZ-7B164-C
114	96107	Friction, [AX4N] (Low / Intermediate Clutch) (.063") (Hi-Energy) 1996-Up	4-5	F6DZ-7B164-A
	K96100	Friction Module, [AXOD / AXODE] 1986-E91	1	
	K96100B	Friction Module, [AXODE / AX4S] L1991-95	1	
	K96100D	Friction Module, [AXODE / AX4S] (Hi-Energy) L1991-Up	1	
	K96100F	Friction Module, [AX4N / 4F50N] (Hi-Energy) 1995-Up	1	
		STEEL CLUTCH		
125	96115A	Steel Cushion, [AXOD / AXODE] (Intermediate Clutch) (.062") (21 Teeth) 1990-Up	1	
125	96116	Steel Spacer, [AXODE / AX4S / AX4N] (Intermediate Clutch) (.117") (21 Teeth) 1992-Up	1	
125	96119	Steel Cushion, [AX4N] (Intermediate Clutch) (.070") (No Teeth) 1995-Up	1	
126	96100	Steel, [AXOD / AXODE] (Forward Clutch) (.070") 1986-E91	4	E6DZ-7B442-A
126	96100A	Steel, [AXODE / AX4S / AX4N] (Forward Clutch) (.070") 10/1991-Up	5	F2DZ-7B442A
126	96104	Steel, [AXOD] (Intermediate Clutch) (.090") 1986-87	5	E6DZ-7B442B
126	96100	Steel, [AXOD / AXODE / AX4N] (Intermediate Clutch) (.070") 1988-95 (*Also [AX4S] 1999-Up)	5	E6DZ-7B442A
126	96100B	Steel, [AXODE] 1996-98 & [AX4N] 1996-Up (Intermediate Clutch) (.070") (Kolene)	4	F2DZ-7B442-AA
126	96100D	Steel, [AX4S] (Intermediate Clutch) (.093") (3.8L Windstar) 1999-Up	4	XF2Z-7B442BA
126	96100C	Steel, [AX4N] (Intermediate Clutch) (.093") (Kolene) (3.4L Only*) 1997-Up (*Also [AXODE] 1998 (3.8L Windstar)	4	
129	96114A	Steel Cushion, [AXOD / AXODE] (Forward Clutch) (.073") (21 Teeth) (Waved) 1990-91 (4.725"ID)	1	E8DZ-7E085-A
129	96114	Steel Cushion, [AXOD / AXODE] (Forward Clutch) (.062") (21 Teeth) (Waved) 1986-89 (4.725"ID)	1	
129	96114B	Steel Cushion, [AXODE / AX4S / AX4N] (Forward Clutch) (.083") (21 Teeth) (Waved) 1992-Up (4.923"ID)	1	F2DZ-7E085-A
130	96101	Steel, [AXOD / AXODE / AX4S / AX4N] (Reverse Clutch) (.070") (54 Teeth) 1986-Up	4	E6DZ-7B442-C
130	96101A	Steel, [AX4N / 4F50N] (Reverse Clutch) (.059") (52 Teeth) (3.4L & 4.6L) 1998-Up	4	F8OZ-7B442-BA
134	96106	Steel, [AX4N] (Low / Intermediate Clutch) (.070") 1995-Up	5	F5DZ-7B442-A
	K96110	Steel Module, [AXOD] 1986-91	1	

	K96110B	Steel Module, [AXOD / AXODE] L1991-95	1	
	K96110D	Steel Module, [AXODE / AX4S] 1996-98	1	
	K96110J	Steel Module, [AXODE / AX4S] 1999-Up	1	
	K96110F	Steel Module, [AX4N] 1995-98	1	
	K96110L	Steel Module, [AX4N] 1999-Up	1	
		CLUTCH PRESSURE PLATES		
144	96719A	Pressure Plate, [AXOD / AXODE / AX4S / AX4N] (Intermediate Clutch) (.125") 1988-Up	1	E8DZ-7B066-A
144	96719	Pressure Plate, [AXOD / AXODE / AX4S / AX4N] (Intermediate Clutch) (.203") 1986-87	1	E6DZ-7B066-B
144	96719B	Pressure Plate, [AX4N] (Intermediate Clutch) (.248") 1995-Up	1	
144	96719C	Pressure Plate, [AX4N] (Intermediate Clutch (Flat) (.264") 1995-Up	1	F5DZ-7B066-C
146	96718	Pressure Plate, [AXOD / AXODE / AX4S] (Direct Clutch) (.156") 1986-Up	1	E6DZ-7B066-A
146	96718A	Pressure Plate, [AX4N] (Direct Clutch) (.130") 1995-Up	1	F5DZ-7B066-A
146	96718B	Pressure Plate, [AX4N] (Direct Clutch) (.268") 1995-Up	1	F5DZ-7B066-D
148	96714	Pressure Plate, [AXOD / AXODE] (Forward Clutch) (.285") 1986-E91	1	E6DZ-7B066-C
148	96714B	Pressure Plate, [AXODE / AX4S / AX4N] (Forward Clutch) (.170") 1995-Up	1	
148	96714A	Pressure Plate, [AXODE / AX4S / AX4N] (Forward Clutch) (.278") L1991-Up	1	
150	96717	Pressure Plate, [AXOD / AXODE / AX4S / AX4N] (Reverse Clutch) (.197") 1986-Up	1	E6DZ-7B066-D
150	96717A	Pressure Plate, [AX4N] (Reverse Clutch) (.140") 1995-97	1	
150	96717B	Pressure Plate, [AX4N] (Reverse Clutch) (.325") 1998-Up	1	
154	96720	Pressure Plate, [AX4N] (Low / Intermediate Clutch) (.196") 1995-Up	1	F5DZ-7B066-B
		VALVE BODY KITS		
	K96908S	Valve Body Kit, [AXOD] 1986-90	1	Superior
	K96908	Shift Kit, [AXOD] 1986-90	1	Transgo
	K96732	Lube Kit, [AXOD / AXODE] (Dam) (Helps Prevent Planet Burnout) 1986-Up	1	Superior
	K96908SA	Valve Body Kit, [AXODE] 1991-Up	1	Superior
	K96908E	Shift Kit, [AXODE / AX4S] 1991-Up	1	Transgo
	K96908F	Shift Kit, [AX4N] 1995-05	1	Transgo
	KAXODV	Valve Body Kit, [AXOD] (With Steel Boost Valve & Sleeve) 1986-90	1	Superior
	K96908A-5	1-2 Capacity Modulator Springs Kit, [AXOD] (With Clips) (Corrects Soft 1-2 Shift) 86-90	1	Superior
	K96908EJ	Shift Kit, [AXODE / AX4S] (JR) 1995-01	1	Transgo
		OIL SEALING RINGS		
	K96903A	Ring Kit, [AXOD / AXODE / AX4S / AX4N] (Metal) 1986-Up	1	
	K96903	Ring Kit, [AXOD / AXODE / AX4S / AX4N] (Contains: 12-Rings, 1-Seal Plated, & 11-Teflon) 1986-Up	1	
176	96303	Ring, [AXOD / AXODE / AX4S / AX4N] (Pump Slide) (3.079"OD) (Metal) 1986-Up	1	E6DZ-7G281-A
177	96301T	Ring, [AXOD / AXODE / AX4S / AX4N] (Pump Shaft) (Rear) (.833"OD) (Teflon) 1986-Up	2	E6DZ-7G093-A
177	96300T	Ring, [AXOD / AXODE / AX4S / AX4N] (Pump Shaft) (Front) (.693"OD) (Teflon) 86-Up	2	E6DZ-7G092-A
178	96305	Ring, [AXOD / AXODE / AX4S / AX4N] (Turbine Shaft) (Front) (1.033"OD) (Metal) 1986-Up	1	E6DZ-7G091-A
178	96305T	Ring, [AXOD / AXODE / AX4S / AX4N] (Turbine Shaft) (Front) (1.033"OD) (Teflon) 1986-Up	1	
178	96302T	Ring, [AXOD / AXODE / AX4S / AX4N] (Turbine Shaft) (Rear) (1.008"OD) (Teflon) 1986-Up	1	E6DZ-7G090-A
179	96306	Ring, [AXOD / AXODE / AX4S / AX4N] (Forward / Direct) (2.466"OD) (Metal) 1986-Up	5	TAW-1892
	96309T	Ring, [AXOD] (Governor) (.529"OD) (Teflon) 1986-90	1	E6SP-7G174-AA
		WASHERS & BEARINGS		
	K96906	Washer Kit, [AXOD / AXODE] (Contains: 6-Plastic & 1-Metal) 1986-95	1	

	K96906A	Washer Kit, [AXODE / AX4S] (Contains: 8-Plastic & 1-Metal) 1996-Up	1	
	K96906B	Washer Kit, [AX4N] (Contains: 7-Plastic) 1995-Up	1	
	K96907	Bearing Kit, [AXOD / AXODE / AX4S / AX4N] (Includes: 9-Bearings) 1986-Up	1	
209	96855-01K	Caged Needle Bearing, [AXOD / AXODE / AX4S] (Pump Shaft) 1986-Up (*Also [AX4N] (1.00"OD) Up to 1999)	1	Sonnax
209	33000-01	Caged Needle Bearing, [AX4N / AX4S] (Pump Shaft) (With Seal) (1.065"OD) (.705" Wide) 1999-Up	1	
209	96419-01	Caged Needle Bearing, [AX4N] (Pump Shaft) (1.063"OD) (.568" Wide) (With Seal) 2000-Up	1	Sonnax
214	96435	Washer, [AXOD / AXODE / AX4S / AX4N] (Driven Sprocket Support to Overdrive Drum) (.088") 1986-Up	1	E6DZ-7D014-A
214	96436	Washer, [AXOD / AXODE / AX4S / AX4N] (Driven Sprocket Support to Overdrive Drum) (.098") 1986-Up	1	E6DZ-7D014-B
214	96437	Washer, [AXOD / AXODE / AX4S / AX4N] (Driven Sprocket Support to Overdrive Drum) (.107") 1986-Up	1	E6DZ-7D014-C
214	96438	Washer, [AXOD / AXODE / AX4S / AX4N] (Driven Sprocket Support to Overdrive Drum) (.117") 1986-Up	1	E6DZ-7D014-D
219	96430	Washer, [AXOD / AXODE / AX4S / AX4N] (Driven Sprocket Support to Direct & Intermediate Drum) (.056"- 0.062")	1	E6DZ-7G273-A
219	96431	Washer, [AXOD / AXODE / AX4S / AX4N] (Driven Sprocket Support to Direct & Intermediate Drum) (.064"- 0.070")	1	E6DZ-7G273-B
219	96432	Washer, [AXOD / AXODE / AX4S / AX4N] (Driven Sprocket Support to Direct & Intermediate Drum) (.076"- 0.080")	1	E6DZ-7G273-C
219	96433	Washer, [AXOD / AXODE / AX4S / AX4N] (Driven Sprocket Support to Direct & Intermediate Drum) (.085"- 0.089")	1	E6DZ-7G273-D
220	96428	Bearing W/Races, [AXOD / AXODE / AX4S] (Driven Sprocket Support to Direct & Intermediate Drum)	1	E6DZ-7F240-A
229	96426	Washer, [AXOD / AXODE / AX4S] (Forward Drum to Low Sprag) (4-Square/Flat Tabs) 1986-Up	1	E6DZ-7A166-A
229	96426A	Washer, [AX4N] (Forward Drum to Low Sprag) (With 4-Round Tabs) 1995-Up	1	F6DZ-7A166-A
232	96427	Washer, [AXOD / AXODE / AX4S / AX4N] (Direct / Intermediate Drum to Direct Sprag) (2-Tab) 1986-Up	1	E6DZ-7F369-A
235	96425	Bearing W/Race, [AXOD / AXODE / AX4S / AX4N] (Intermediate Hub) (Both Sides) 1986-Up	2	E6DZ-7C096-A
237	96042	Bushing (Replaces Bearing), [AXODE / AX4S / AX4N] (Front Planet Shaft) (Outer) 1993-Up	1	
238	96422	Bearing W/Race, [AXOD / AXODE / AX4S / AX4N] (Front Planet to Rear Planet) 86-Up	1	E6DZ-7G177-A
241	96003-01	Caged Needle Bearing, [AXOD / AXODE / AX4S / AX4N] (Front Planet Shaft) (Inner) 1986-Up **(*Requires: 96003-MTL)**	1	Sonnax
	96003-MTL	Installation Tool, [AXOD / AXODE / AX4S / AX4N] (*For the 96003-01 Bearing)	1	Sonnax
256	96429AA	Needle Bearing, [AX4N] (Inside Coast Clutch Drum) (Drum With Sun Gear)	1	
257	96423	Bearing W/Races, [AXOD / AXODE / AX4S] (Rear Sun Gear Drum to Differential Support) 1986-Up	1	E6DZ-7G178-A
257	96423A	Bearing W/Races, [AX4N] (Rear Sun Gear Drum to Differential Support) 1995-Up	1	F5DZ-7G178-A
258	96439	Washer, [AX4N] (Low / Intermediate Clutch Hub to Low / Intermediate Spring Retainer) (3-Tab) 1995-Up	1	
259	96441A	Race, [AX4N] (Differential Support to Park Gear) (.085") (2.15 - 2.25mm) (#1 Green) 1995-Up	1	F4DZ-7F451-AB
259	96441B	Race, [AX4N] (Differential Support to Park Gear) (.090") (2.27 - 2.37mm) (#2 Blue) 1995-Up	1	F4DZ-7F451-BB
259	96441C	Race, [AX4N] (Differential Support to Park Gear) (.094") (2.39 - 2.49mm) (#3 Black) 1995-Up	1	F4DZ-7F451-CB
259	96441D	Race, [AX4N] (Differential Support to Park Gear) (.098") (2.51 - 2.61mm) (#4 White) 1995-Up	1	F4DZ-7F451-DB
259	96441E	Race, [AX4N] (Differential Support to Park Gear) (.102") (2.53 - 2.73mm) (#5 Brown) 1995-Up	1	F4DZ-7F451-EB

259	96441F	Race, [AX4N] (Differential Support to Park Gear) (.106") (2.75 - 2.85mm) (#6 Gold) 1995-Up	1	F4DZ-7F451-FB
260	96424	Bearing W/Race, [AXOD / AXODE / AX4S] (Differential Support to Parking Gear) 86-Up	1	E6DZ-7F405-A
260	96424A	Bearing W/Race, [AX4N] (Differential Support to Parking Gear) 1995-Up	1	F5DZ-7F405-A
265	75435B	Bearing W/Race, [AXOD AXODE / AX4S] (Drive Speed-O Gear to Cover) 1986-Up	1	E6DZ-7G173-A
278	96401	Washer, [AXOD / AXODE / AX4S] (Drive Sprocket) (Both Sides) (*3-Tabs Not Same Distant Apart) 1986-95	2	E6DZ-7G099-A
278	96401A	Washer, [AX4N] (Drive Sprocket) (Both Sides) (*3-Tabs Same Distance Apart) 1995-Up (*Also [AXODE / AX4S] 1996-Up)	2	F5DZ-7G099-A
279	96401	Washer, [AXOD / AXODE / AX4S] (Drive Sprocket to Case Cover) 1986-95	1	E6DZ-7G099-A
279	96401A	Washer, [AX4N] (Drive Sprocket to Case Cover) 1995-Up (*Also [AXODE / AX4S] 1996-Up)	1	F5DZ-7G099-A
280	96402	Washer, [AXOD / AXODE / AX4S] (Driven Sprocket to Case Cover) (Metal) (3-Flat Tabs) (060" Thick) 1986-95	1	E6DZ-7G096-A
280	96402A	Washer, [AXODE / AX4S] (Driven Sprocket to Case Cover) (Plastic, 3-Flat Tabs) 96-Up (*Also [AX4N] 1995-Up)	1	F5DZ-7G096-A
281	96400	Washer, [AXOD / AXODE / AX4S / AX4N] (Driven Sprocket to Direct / Intermediate Support) (Plastic)	1	E6DZ-7G115-A
	96403	Bearing W/Race, [AXOD / AXODE / AX4S /AX4N] (Differential to Sun Gear) 1986-Up	1	E6DZ-7F404-A
	96443A	Spacer, [AX4N] (Differential Ring Gear to Case) 1995-Up	1	
292	96420	Bearing W/Race, [AXOD / AXODE / AX4S / AX4N] (Differential to Case) 1986-05	1	E6DZ-7G112-A
293	96407	Washer, [AXOD / AXODE] (Differential to Case) (.045" - .049") (Orange) 1986-91	1	E6DZ-7G103-A
293	96408	Washer, [AXOD / AXODE] (Differential to Case) (.055" - .059") (Purple) 1986-91	1	E6DZ-7G103-B
293	96409	Washer, [AXOD / AXODE] (Differential to Case) (.064" - .069") (Yellow) 1986-91	1	E6DZ-7G103-C
293	96411A	Washer, [AXODE / AX4S / AX4N] (Differential to Case) (.048") (Red) 1992-Up	1	F2DZ-7G103-C
293	96114D	Washer, [AXODE / AX4S / AX4N] (Differential to Case) (.061") (Black) 1992-Up	1	F2DZ-7G103-D
293	96114E	Washer, [AXODE / AX4S / AX4N] (Differential to Case) (.065") (White) 1992-Up	1	F2DZ-7G103-E
293	96114F	Washer, [AXODE / AX4S / AX4N] (Differential to Case) (.068") (Brown) 1992-Up	1	F2DZ-7G103-F
293	96114G	Washer, [AXODE / AX4S / AX4N] (Differential to Case) (.072") (Gold) 1992-Up	1	F2DZ-7G103-G
295	96416	Caged Needle Bearing, [AXOD / AXODE / AX4S / AX4N] (Converter Reactor) (Inner) 1986-Up	1	E6DZ-7G233-A
298	96415	Caged Needle Bearing, [AXOD / AXODE / AX4S / AX4N] (Driven Sprocket Support) (Inner) 1986-Up	1	E6DZ-7FG247-A
		GASKETS & RUBBER COMPONENTS		
300	96500	Gasket, [AXOD / AXODE / AX4S] (Bottom Pan) (Cork) 1986-96	1	E6DZ-7A191-A
300	96500C	Gasket, [AX4S] (Bottom Pan) (Bonded) 1995-Up	1	F6DZ-7A191-A
300	96500A	Gasket, [AX4N] (Bottom Pan) (Cork) 1995-Up	1	F5DZ-7A191-A
300	96500B	Gasket, [AX4N] (Bottom Pan) (Bonded) 1995-Up	1	F6DZ-7A191-B
301	96501	Gasket, [AXOD / AXODE / AX4S] (Side Cover) (Cork) 1986-96	1	E6DZ-7F396-A
301	96501F	Gasket, [AXOD / AXODE /AX4S] (Side Cover) (Farpak) 1986-96	1	
301	96501C	Gasket, [AXOD / AXODE / AX4S] (Side Cover) (Bonded) 1986-Up	1	
301	96501A	Gasket, [AX4N] (Side Cover) (Cork) 1995-00	1	F5DZ-7F396-A
301	96501B	Gasket, [AX4N] (Side Cover) (Plastic / Rubber Bonded) 1995-00	1	F6DZ-7F396-B
301	96501DB	Gasket, [AX4N / 4F50N] (Side Cover) (Rubber Molded) 2000-Up (*For Aluminum Cover)	1	YF1Z-7F396-AA
301	96501E	Gasket, [4F50N] (Side Cover) (Rubber Molded) 2000-Up (*For Steel Cover)	1	YF1Z-7F396-BA
307	96502B	Gasket, [AXOD / AXODE / AX4S] (Low / Intermediate Servo) (*With Silicone Bead) 1986-Up	1	F2DZ-7D026-A
310	96536	Gasket, [AXOD] (Pump to Seperator Plate) (No Stripe) 1986	1	E6DZ-7G331-A
310	96536A	Gasket, [AXOD] (Pump to Seperator Plate) (White Stripe) 1987	1	E7DZ-7G331-A
310	96536B	Gasket, [AXOD] (Pump to Seperator Plate) (Yellow Stripe) 1988-90	1	E8DZ-7G331-A
310	96536C	Gasket, [AXOD] (Pump to Seperator Plate) (Blue Stripe) 1990	1	E9OY-7G331-A

310	96536D	Gasket, [AXODE] (Pump to Seperator Plate) (Green Stripe) 1991-Up	1	F1DZ-7G331-A
310	96533	Gasket, [AXOD] (Pump Seperator Plate to Valve Body) (No Stripe) 1986	1	E6DZ-7A136-A
310	96534	Gasket, [AXOD] (Pump Seperator Plate to Valve Body) (White Stripe) 1987	1	E7DZ-7A136-A
310	96534A	Gasket, [AXOD] (Pump Seperator Plate to Valve Body) (Yellow Stripe) 1988-90	1	E8DZ-7A136-A
310	96534B	Gasket, [AXOD] (Pump Seperator Plate to Valve Body) (Blue Stripe) (3.8L) 1990	1	E9OY-7A136-A
310	96534C	Gasket, [AXODE] (Pump Seperator Plate to Valve Body) (Green Stripe) 1991-Up	1	F1DZ-7A136-A
310	96538	Bonded Gasket, [AX4S] (Pump) (Cast # AH) 1994-95	1	
310	96538A	Bonded Gasket, [AX4S] (Pump) (Cast # 51) (Taurus, Sable All 1996-98) (Windstar 3.0L 1994-97)	1	
310	96538B	Bonded Gasket, [AX4S] (Pump) (Cast # 99) (Taurus, Sable 3.0L) (Windstar 3.0L / 3.8L 1999-Up)	1	
310	96536E	Gasket, [AX4N] (Pump to Seperator Plate) (No Stripe) 1995-97	1	
310	96534D	Gasket, [AX4N] (Pump Seperator Plate to Valve Body) 1995-97	1	
310	96536F	Gasket, [AX4N] (Pump to Seperator Plate) (Orange Stripe) 1998-03	1	
310	96534E	Gasket, [AX4N] (Pump Seperator Plate to Valve Body) (Orange Stripe) 1998-03	1	
310	96534F	Gasket, [AX4N] (Seperator Plate to Valve Body) (Blue Stripe) 2004-Up	1	
310	96536G	Gasket, [AXAN] (Pump to Seperator Plate) (White Stripe) 2004-Up	1	
313	96583	O-Ring, [AXOD / AXODE / AX4S / AX4N] (Oil Pump Slide) 1986-Up	1	E6DZ-7G282-A
314	65170	Seal, [AXOD / AXODE / AX4S / AX4N] (Pump Slide) (Rubber) 1986-Up	1	8631283
315	65180	Seal, [AXOD / AXODE / AX4S / AX4N] (Pump Slide) (Teflon) 1986-Up	1	8631877
320	96529	Gasket, [AXOD] (Valve Body Seperator Plate to Case Cover) (No Stripe) 1986	1	E6DZ-7C155-A
320	96529A	Gasket, [AXOD] (Valve Body Seperator Plate to Cover) (White Stripe) 1987	1	E7DZ-7C155-A
320	96529B	Gasket, [AXOD] (Valve Body Seperator Plate to Cover) (Yellow Stripe) 1988-90	1	E8DZ-7C155-A
320	96529C	Gasket, [AXODE] (Valve Body Seperator Plate to Case Cover) (Orange Stripe) 1991-98	1	F1DZ-7C155-A
320	96529D	Gasket, [AX4S] (Valve Body Seperator Plate to Case Cover) (Yellow Stripe) 1999-Up	1	Replaces Bonded
320	96529F	Gasket, [AX4N] (Valve Body Seperator Plate to Case Cover) (White Stripe) 1994-97	1	Replaces Bonded
320	96529G	Gasket, [AX4N] (Valve Body Seperator Plate to Case Cover) (Orange Stripe) 1998-03	1	Replaces Bonded
320	96529H	Gasket, [AX4N] (Valve Body Seperator Plate to Case Cover) (Yellow Stripe) 2004-Up	1	
320	96532A	Bonded Gasket, [AX4S] (Valve Body) (Cast # 40) (1994-95 Taurus, Sable 3.0L)	1	F5DZ-7Z490-C
320	96532B	Bonded Gasket, [AX4S] (Valve Body) (Cast # 41) (1994-95 Taurus, Sable, Continental 3.8L)	1	F5DZ-7Z490-D
320	96532D	Bonded Gasket, [AX4S] (Valve Body) (Cast # 53) (1994-95 Windstar 3.0L)	1	F58Z-7Z490-B
320	96532C	Bonded Gasket, [AX4S] (Valve Body) (Cast # 58) (1994-95 Windstar 3.8L)	1	F58Z-7Z490-A
320	96532	Bonded Gasket, [AX4S] (Valve Body) (Cast # 31) (1994-95 Taurus SHO 3.2L)	1	F5DZ-7Z490-B
320	96532F	Bonded Gasket, [AX4S] (Valve Body) (Cast # 47) (1996-97 Taurus, Sable 3.8L) (*Replaces 67 & 69)	1	F6DZ-7Z490-B
320	96532E	Bonded Gasket, [AX4S] (Valve Body) (Cast # 63) (1994-97 Taurus, Sable 3.0L) (Windstar 3.8L #42, #50 or #97)	1	F68Z-7Z490-A
320	96532G	Bonded Gasket, [AX4S] (Valve Body) (Cast # 98) (1998 Taurus, Sable 3.0L) (Windstar 3.0L / 3.8L)	1	
320	96532H	Bonded Gasket, [AX4S] (Valve Body) (Cast # 99) (1999-00 Taurus, Sable 3.0L) (1999-Up Windstar 3.0L / 3.8L) (*Replaces 94 & 95)	1	
320	96532K	Bonded Gasket, [AX4S] (Valve Body) (Cast # 00) (2000-03 Taurus, Sable All)	1	
320	96530	Bonded Gasket, [AX4N] (Valve Body) (No Cast #) (1994-95 Taurus, Sable 3.0L)	1	F5DZ-7Z490-A
320	96530D	Bonded Gasket, [AX4N] (Valve Body) (Cast # 11) (1995-97 All With 4.6L)	1	F5OZ-7Z490-A
320	96530A	Bonded Gasket, [AX4N] (Valve Body) (Cast # 13) (1995-97 Taurus, Sable 3.0L) (*Replaces #14)	1	
320	96530C	Bonded Gasket, [AX4N] (Valve Body) (Cast # 15) (1995-97 Taurus SHO, Sable 3.4L)	1	F6DZ-7Z490-A
320	96530F	Bonded Gasket, [AX4N] (Valve Body) (Cast # 82 or 86) (1998-99 Taurus, Sable 3.0L) (With 24-Valve)	1	

320	96530E	Bonded Gasket, [AX4N] (Valve Body) (Cast # 83 or 87) (1998-99 Taurus, Sable 3.0L) (With 12-Valve)	1	
320	96530G	Bonded Gasket, [AX4N] (Valve Body) (Cast # 81 or 85) (1998-99 Taurus SHO 3.4L)	1	
320	96530H	Bonded Gasket, [AX4N] (Valve Body) (Cast # 80 or 84) (1998 Continental 4.6L)	1	
320	96530K	Bonded Gasket, [AX4N] (Valve Body) (Cast # 90 or 03) (1999-00 Continental 4.6L) (2000 Taurus, Sable 3.0L)	1	
320	96530L	Bonded Gasket, [AX4N] (Valve Body) (Cast # 04) 2001-Up (Continential 4.6L)	1	
320	96530M	Bonded Gasket, [AX4N] (Cast # 5) (2001-03 Taurus, Sable & Windstar)	1	
320	96530N	Bonded Gasket, [AX4N] (Valve Body) (Cast # 01) 2004-Up	1	
321	96531	Gasket, [AXOD] (Valve Body to Seperator Plate) (No Stripe) 1986	1	E6DZ-7D100-A
321	96531A	Gasket, [AXOD] (Valve Body to Seperator Plate) (White Stripe) 1987	1	E7DZ-7D100-A
321	96531B	Gasket, [AXOD] (Valve Body to Seperator Plate) (Yellow Stripe) 1988-90	1	E8DZ-7D100-A
321	96531C	Gasket, [AXODE] (Valve Body to Seperator Plate) (Green Stripe) 1991-98	1	F1DZ-7D100-A
321	96531D	Gasket, [AX4S] (Valve Body to Seperator Plate) (Blue Stripe) 1999-Up (*Replaces the Bonded Gasket)	1	
321	96531F	Gasket, [AX4N] (Valve Body to Seperator Plate) 1994-97 (Yellow Stripe) (*Replaces the Bonded Gasket)	1	
321	96531G	Gasket, [AX4N] (Valve Body to Seperator Plate) 1998-03 (Green Stripe) (*Replaces the Bonded Gasket)	1	
321	96531H	Gasket, [AX4N] (Valve Body to Seperator Plate) 2004-Up (Blue Stripe)	1	
324	96556	Gasket, [AXOD / AXODE / AX4S] (Case Cover to Case) 1986-99	1	E6DZ-7G303-A
324	96556B	Gasket, [AX4S] (Case Cover to Case) 2000-Up	1	YF1Z-7G303-AA
324	96556A	Gasket, [AX4N] (Case Cover to Case) (Silicone Beaded) 1995-E99	1	F5DZ-7G303-A
324	96556C	Gasket, [AX4N / 4F50N] (Case Cover to Case) (Silicone Beaded) L1999-03	1	YF3Z-7G303-AA
324	96556D	Gasket, [4F50N] (Case Cover to Case) (Silicone Beaded) 2004-Up	1	4F1Z-7G303-CA
332	96525A	Lip Seal, [AXOD / AXODE] (Direct & Intermediate Clutch) (Inner) 1986-93 (*Except [AXODE] SHO)	2	F3DZ-7G240-A
332	96524	O-Ring, [AXODE / AX4S /AX4N] (Direct & Intermediate Clutch) (Inner) 1993-Up (* For [AXODE] SHO)	2	F3DZ-7F225-A
333	96523A	Lip Seal, [AXOD / AXODE / AX4S] (Intermediate & Forward Clutch) (Outer) 1986-Up	2	E6DZ-7F224-A
334	96526	O-Ring, [AXOD / AXODE / AX4S / AX4N] (Direct & Intermediate Clutch Hub)	2	E6DZ-7G102-A
336	96528A	Lip Seal, [AXOD / AXODE / AX4S / AX4N] (Forward Clutch) (Inner) 1986-Up	1	E6DZ-7A548-B
337	96527A	Lip Seal, [AXOD / AXODE / AX4S] (Direct Clutch) (Outer) 1986-Up	1	E6DZ-7A548-A
338	84562	Lip Seal, [AXODE / AX4S / AX4N] (Reverse Clutch) (Inner) 1986-Up	1	E6DZ-7D404-A
339	96522	Lip Seal, [AXOD / AXODE / AX4S / AX4N] (Reverse Clutch) (Outer) 1986-Up	1	E6DZ-7D403-A
345	96514	O-Ring, [AXOD] (Governor Cover) 1986-90	1	803201-S
351	96553A	O-Ring, [AX4N] (Neutral-Drive Accumulator Cover) 1995-Up	1	F5DZ-7H277-A
352	96511	Lathe Cut Seal, [AXOD / AXODE / AX4S] (1-2 Accumulator Piston) 1986-96	1	E6DZ-7G095-A
352	96511A	Lathe Cut Seal, [AX4N] (1-2 , 3-4 & Neutral-Drive Accumulator Pistons) 1995-Up	3	F5DZ-7G095-A
353	96513	O-Ring, [AXOD / AXODE / AX4S] (Neutral-Drive Accumulator Piston) 1986-96	1	E6DZ-7G275-A
354	96512	Lathe Cut Seal, [AXOD / AXODE / AX4S / AX4N] (3-4 Accumulator Piston) 1986-Up	1	E6DZ-7F248-A
355	96586	Lathe Cut Seal, [AX4N] (Reverse Accumulator Piston) 1995-Up	1	F5DZ-7H274-A
361	96515	O-Ring, [AXOD / AXODE / AX4S] (Low / Intermediate Servo Piston) 1986-Up	1	E6DZ-7D025-A
362	96516	O-Ring, [AXOD / AXODE / AX4S] (Low / Intermediate Servo Cover) 1986-Up	1	E6DZ-7D040-A
367	96517	Seal, [AXOD / AXODE / AX4S] (Overdrive Servo Cover) (Thick Wall) 1986-Up	1	E6DZ-7D024-A
367	96517A	Seal, [AXOD / AXODE / AX4S / AX4N] (Overdrive Servo Cover) (Thin Wall) 1986-Up	1	E6DZ-7D024-B
371	3292	Boot, [AXOD / AXODE / AX4S / AX4N] (Filler Tube) 1986-Up	1	6264902
	13582	Boot, [AXOD] (Detent Cable) 1986-91	1	E6DZ-7F429-A
	13918	O-Ring, [AXOD / AXODE / AX4S / AX4N] (TCC & Shift Solenoids) (Outer) 1986-Up	1-4	F1DZ-7Z484-A
	96585	O-Ring, [AXODE / AX4S / AX4N] (TCC & Shift Solenoids) (Inner) 1991-Up	1-4	F1DZ-7Z484-B

	3665	O-Ring, [AX4N] (EPC Solenoid) (Outer) 1995-Up	1	F1DZ-7Z144-A
	96584	O-Ring, [AX4N] (EPC Solenoid) (Inner) 1995-Up	1	F1DZ-7Z144-B
379	96503	Seal, [AXOD / AXODE] (Oil Filter) 1986-95	2	E6DZ-7A469-A
380	96508	O-Ring, [AXOD / AXODE] (Turbine Shaft) (*For 23-Spline Shaft) 1986-E93	1	87022-S96
380	96508A	O-Ring, [AXODE / AX4S / AX4N] (Turbine Shaft) (*For 25-Spline Shaft) L1993-Up	1	
	65167	Seal, [AXOD / AXODE] (Rear Lube Tube to Case) (1st Design) 1991-E93	1	E6DZ-7G085-A
	65167A	Seal, [AXODE / AX4S] (Rear Lube Tube to Case) (2nd Design) L1993-Up	1	F8DZ-7G085-AA
	96167B	Seal, [AX4N] (Rear Lube Tube & Differential Support Lube Tube) 1995-Up	2	F5DZ-7G085-A
		TECHNICAL MANUALS		
	TMAXOD	Technical Manual, [AXOD] 1986-90	1	ATSG
	TMAXODE	Technical Manual, [AXODE / AX4S] 1991-Up	1	ATSG
	TMAXODUD	Technical Manual, [AXOD / AXODE / AX4S] (Update Handbook) 1986-Up	1	ATSG
	TMAX4N	Technical Manual, [AX4N] 1995-Up	1	ATSG
		ELECTRICAL COMPONENTS		
410	96964	Switch, [AXOD] (Neutral Safety) 1986-10/87	1	E6DZ-7A247-A
410	96964A	Switch, [AXOD] (Neutral Safety) (6-Prong) 11/1987-90	1	E8DZ-7A247-A
410	K96964B	Switch, [AXODE / AX4S] (Neutral Safety) (8-Prong) 1991-92 (*Kit Will Cover 8-Pin 1991-97) & (Includes 8-Pin Sensor & Connector Assembly)	1	F2DZ-7A247-A
410	96957	Switch, [AXODE / AX4S / AX4N] (Neutral Safety) (8-Prong) 1993-97	1	F5DZ-7F293-BA
410	96957B	Switch, [AX4S / AX4N] (Neutral Safety) (10-Prong / Digital) 1998-Up	1	F8DZ-7F293-AB
410	96957A	Switch, [AX4S / AX4N] (Neutral Safety) (11-Prong / Analog) 1996-99	1	F6DZ-7F293-A
	96963	Switch, [AXOD] (Pump Oil Pressure) 1986-Up	1	E6DZ-7E440-B
	96962	Switch, [AXOD] (3-2 & 4-3 Pressure Switch) 1986-Up	1	E6DZ-7E440-A
	96963	Switch, [AXODE] (Neutral Pressure Switch) 1991-Up	1	E6DZ-7E440-B
420	96953	Solenoid, [AXODE / AX4S] (Shift) (1-2, 2-3, & 3-4) 1991-Up (OEM) (*Can Use For [AX4N] Also)	3	F1DZ-7G484-A
420	96953R	Solenoid, [AXODE / AX4S] (Shift) (1-2, 2-3, & 3-4) 1991-Up (*Can Use For [AX4N] Also)	3	Rostra
420	96953U	Solenoid, [AXODE / AX4S] (Shift) (1-2, 2-3, & 3-4) 1991-Up (*Can Use For [AX4N] Also)	3	Teckpak
420	96953A	Solenoid, [AX4N] (Shift) (1-2, 2-3, & 3-4) 1995-Up	3	F3DZ-7G484-AA
420	MS-AXODE	Solenoid Master Kit, [AXODE / AX4S / AX4N] (Contains: 1-Lock-Up, 3-Shift, & 1-EPC) 1991-97 (Continental & All 1992-97)	1	Teckpak
420	MS-AXODE-91	Solenoid Master Kit, [AXODE] (Taurus, Sable) 1991-Only* (Contains: 1-Lock-Up, 3-Shift, & 1-EPC)	1	Teckpak
425	96950	Solenoid, [AXOD] (Lock-Up) (Square Body) (Non Electronic) (OEM) 1986-90	1	E6DZ-7G136-A
425	96951R	Solenoid, [AXOD] (Lock-Up) (Square Body) (Non Electronic) 1986-90	1	Rostra
425	96951U	Solenoid, [AXOD] (Lock-Up) (Square Body) (Non Electronic) 1986-90	1	Teckpak
425	96951	Solenoid, [AXODE] (Lock-Up) (Square Body) (Taurus, Sable) 1991 (*Can Use 96950 / 51R / 51U)	1	F1DZ-7G136-A
425	96952	Solenoid, [AXODE / AX4S] (Modulated Lock-Up) (White) 1991 (Lincolns & All 1992-Up) (*Also [AX4N] 1995-96) (OEM)	1	F3DZ-7G136-A
425	96952R	Solenoid, [AXODE / AX4S] (Modulated Lock-Up) (White) 1991 (Lincolns & All 1992-Up) (*Also [AX4N] 1995-96)	1	Rostra
425	96952U	Solenoid, [AXODE / AX4S] (Modulated Lock-Up) (White) 1991 (Lincolns & All 1992-Up) (*Also [AX4N] 1995-96)	1	Teckpak
425	96954	Solenoid, [AXODE / AX4S / AX4N] (Modulated Lock-Up) (Blue) (OEM) (1997-02 Continental) (1998-04 Taurus, Sable) (9-9-1997-03 Windstar)	1	F7OZ-7G136-AA
431	96955	Solenoid, [AXODE / AX4S] (EPC) (Electronic Press Control) (OEM) 1991-Up	1	F8DZ-7G383-BB
431	96955A	Solenoid, [AX4N] (EPC) (Electronic Press Control) (OEM) 1995-Up	1	F8DZ-7G383-AB
774	36951	Sensor, [AXOD / AXODE / AX4S] (Vehicle Speed Sensor) (*For Analog Dash) 86-E99	1	E9TZ-9E731-AA

774	96951A	Sensor,Speed [AXOD / AXODE / AX4S] (VSS) (*For Digital Dash) (*Does Not Use Cable) 1993-E99	1	E9LZ-9E731-A
774	96958	Sensor,Speed [AX4N] (VSS) (*For Analog Dash) (*Uses a Cable) 1995-99	1	E9TZ-9E731-A
774	96958A	Sensor,Speed [AX4N] (VSS) (*For Digital Dash) 1995-99	1	F5DZ-9E731-BA
774	96958D	Sensor, [AX4S] (VSS) (Magnet Generator Type) (Output) L1999-Up	1	XF2Z-7H103-AA
774	96958E	Sensor, [AX4N] (VSS) (Magnet Generator Type) (Output) 2000-Up	1	YF1Z-7H103-AA
437	96956	Sensor, [AXODE / AX4S / AX4N] (TOT / TFT) (Transmission Oil Temperature) 1991-Up	1	F1DZ-7H141-A
438	96959	Sensor, [AXODE / AX4S] (TSS) (Turbine Speed Sensor) 1991-00	1	F1DZ-7M101-A
438	96959C	Sensor, [AX4S] (TSS) (Turbine Speed Sensor) 2001-03	1	1F1Z-7M101-BA
438	96959A	Sensor, [AX4N] (TSS) (Turbine Speed Sensor) 1995-00	1	F5DZ-7M101-A
438	96959B	Sensor, [AX4N] (TSS) (Turbine Speed Sensor) 2001-Up	1	1F1Z-7M101-AA
445	PE96E-1	Repair Kit, [AXODE] (External Wire Harness) (White) (Plugs Into Connector) 1991-92	1	
445	PE96E-2	Repair Kit, [AXODE] (External Wire Harness) (Black) (Plugs Into Connector) 1991-92	1	
445	96968	Repair Kit, [AXODE / AX4S / AX4N] (External Wire Harness) (VSS Sensor)	1	
445	96968R	Repair Kit, [AXODE / AX4S / AX4N] (External Wire Harness) (Plugs Into Connector) 1993-Up	1	Rostra
446	96960	Wire Harness, [AXOD] (Internal) (3.0L) (Non Electronic) 1986-90	1	E6DZ-7G276-A
446	96961	Wire Harness, [AXOD] (Internal) (3.8L) (Non Electronic) 1986-90	1	E8DZ-7G276-A
446	96966	Wire Harness, [AXODE] (Internal) (White Side Case Connector) 1991-92	1	F1DZ-7G276-A
446	96966A	Wire Harness, [AXODE] (Internal) (Black Case Connector) 1991-92	1	F1DZ-7G276-B
446	96966B	Wire Harness, [AXODE / AX4S] (Internal) (Grey Case Connector) (9-Prong) 1993-00	1	F1DZ-7G276C
446	96966C	Wire Harness, [AXOD / AXODE] (Internal) (White Top Connector) 1993-Up	1	F5DZ-7G276BA
446	96967	Wire Harness, [AX4N] (Internal) 1995-03	1	F5DZ-7G276-A
446	96967A	Wire Harness, [AX4N / 4F50N] (Internal) (With Case Connector) 2004-Up	1	4F1Z-7G276AA
		HARD PARTS		
500	96200	Pump Assembly, [AXOD] (With Seperator Plate) (RFE6) 1986	1	E6DZ-7A103-A
500	96200A	Pump Assembly, [AXOD] (With Seperator Plate) (RFE6) 1987	1	E7DZ-7A103-B
500	96200B	Pump Assembly, [AXOD] (With Seperator Plate) (10-Ball) (3.8L) (RFE8) 1988-90	1	E8DZ-7A103-A
500	96200C	Pump Assembly, [AXOD] (With Seperator Plate) (9-Ball) (3.0L) (RFE9) 1988-90	1	
500	96200D	Pump Assembly, [AXODE] (With Seperator Plate) (RFF1) (Taurus, Sable) 1991 (Lock-up Solenoid has a Square Body)	1	
500	96200E	Pump Assembly, [AXODE] (Taurus W/ Seperator Plate) (RFF1) 1992-Up (The Modulated Lock-Up Solenoid a Round Body W/ Neutral Connector) **(*If the Connector is Blue Use 96200FG)**	1	
500	96200F	Pump Assembly, [AXODE] (Lincoln W/ Seperator Plate) (RFF1) 1992-Up (The Modulated Lock-Up Solenoid a Round Body W/ Neutral Connector) **(*If the Connector is Blue Use 96200FG)**	1	
500	96200FG	Pump Assembly, [AX4S] (With Seperator Plate) (RFF1) (The Modulated Lock-Up Solenoid a Round Body With Blue Connector)	1	
500	96200G	Pump Assembly, [AX4N] (RFF4DP-7B324-AA) (With 5-Solenoids) 1995-97	1	
500	96200H	Pump Assembly, [AX4N] (RFXF1P-7B324-AA) 1998-03 (*Also Cast # RFF8DP-7B324-AA)	1	
500	96200I	Pump Assembly, [AX4N] (RF4F1P-7B324-AF) (With 5-Solenoids) 2003-Up	1	
520	96200-01	Cover, [AXOD / AXODE / AX4S / AX4N] (Pump) (7075-T6 Aircraft Aluminum) 1986-Up	1	Sonnax
529	96849	Converter Reactor, [AXOD / AXODE / AX4S] (2.95"OD) (With 3-Holes For Washer # 96401) (3-Holes are not Equal Distance from each other) (*Can Use 96849C) 1986-95	1	E6DZ-7A108-A
529	96849C	Convert Reactor, [AX4S / AX4N] (With 4-Holes For Washer # 278) 1995-Up (*Retros to 1986)	1	
529	96849A	Converter Reactor, [AX4S / AX4N] (With 3-Holes For Washer # 96401A) (3-5/8") (3.373" OD Tall) (The 3-Holes are Equal Distance from each other) (*Can Use 96849C) 1995-Up	1	
529	96849B	Converter Reactor, [4F50N] (4" Tall) 2004-Up	1	3F2Z-7A108-AA
531	K96929	Rotor Kit, [AXOD / AXODE / AX4S / AX4N] (Pump) 1986-Up	1	K86880

532	96927	Rotor, [AXOD / AXODE / AX4S / AX4N] (Pump) 1986-Up	1	
533	96925	Vane, [AXOD / AXODE / AX4S / AX4N] (Pump) 1986-Up	7	
534	96928	Pump Slide, [AXOD / AXODE / AX4S / AX4N] 1986-Up	1	E6DZ-7R194-AA
538	96304	Ring, [AXOD / AXODE / AX4S / AX4N] (Pump Vane) 1986-Up	2	F0DZ-7G287-A
550	96844	Drum, [AXOD / AXODE] (Overdrive) (6-Lugs For Shell) 1986-91	1	E6DZ-7L669-A
550	96844B	Drum, [AXODE / AX4S / AX4N] (Overdrive) (36-Lugs For Shell) 1992-Up	1	
552	96836A	Drum, [AXOD / AXODE] (Direct & Intermediate Clutch) (13mm Long Splines In Forward Clutch Drum) (With Steel Piston) 1986-96	1	F6DZ-7G120-A
552	96836B	Drum, [AXODE / AX4S] (Direct & Intermediate Clutch) (10mm Splines In Forward Clutch Drum) (No Molded Piston) 1998-Up	1	F8DZ-7G120-AA
552	96836C	Drum, [AXODE] (Direct & Intermediate Clutch) (10mm Splines) (4-3/8" Tall Drum) 1993-Up (SHO)	1	
552	96836E	Drum, [AX4S / AX4N] (Direct & Intermediate Clutch) (10mm Splines) (*Uses Molded Pistons) 1995-Up	1	F5DZ-7G120-A
554	96842	Drum, [AXOD / AXODE] (Forward) (13mm Thick Splines on ID) (2.480" Height Thru Center) 1986-96	1	F6DZ-7A360-BA
554	96842B	Drum, [AXOD / AXODE] (Forward) (10mm Thick Splines on ID) (2.480" Height Thru Center) 1994-Up	1	E6DZ-7A360-A
554	96842A	Drum, [AXOD / AXODE] (Forward) (*Fits SHO Taurus Only) 1991-96	1	
554	96842C	Drum, [AXOD / AXODE] (Forward) (10mm Thick Splines on ID) (2.3000" Height Thru Center) 1995-Up	1	F5DZ-7A360-A
556	96829	Drum, [AXOD / AXODE / AX4S] (Reverse) (.360"OD Oil Hole) 1986-Up	1	E6DZ-7F341-A
556	96829A	Drum, [AX4N] (Reverse Clutch) (.440"OD Oil Hole) 1995-Up	1	F5DZ-7F341-A
559	96748	Drum, [AXOD / AXODE] (Low With Sun Gear) 1986-91	1	E6DZ-7A626-AA
559	96748AA	Drum, [AXODE / AX4S] (Low With Sun Gear) (With 3-Slotted Holes) (*Can Use 96748) 1992-96	1	F6DZ-7A626-AA
559	96748A	Drum, [AX4N] (Coast With Sun Gear) (With Needle Bearing) 1995-03	1	F5DZ-7A626-A
572	96838	Clutch Hub, [AXOD] (Intermediate) (13/16" Clutch Splines) 1986-89	1	E6DZ-7B067-A
572	96838A	Clutch Hub, [AXOD / AXODE / AX4S] (Intermediate) (7/8" Clutch Splines) 1989-95	1	E8DZ-7B067-A
572	96838B	Clutch Hub, [AXOD / AXODE / AX4S] (Intermediate) (15/16" Clutch Splines) 1988-95	1	1F1Z-7B067-BA
572	96838C	Clutch Hub, [AX4S / AX4N] (Intermediate) (1" Clutch Splines) 1994-Up (*Can Use 96838D)	1	F3DZ-7B067-A
572	96838D	Clutch Hub, [AX4N] (Intermediate) (1-1/16" Clutch Splines) 1995-Up	1	F6DZ-7B067-A
572	96838E	Clutch Hub, [AX4N / 4F50N] (Intermediate) (1-1/8" Clutch Splines) 1998-Up	1	
575	96834	Clutch Hub, [AXOD] (Direct Overrun Clutch) (.740" Thick) 1986-90	1	E6DZ-7D171-B
575	96834A	Clutch Hub, [AXODE / AX4N] (Direct Overrun Clutch) (.830" Thick) 1991-Up	1	F5DZ-7D171-A
577	K96725	Clutch Hub & Outer Race, [AX4N] (Low / Intermediate Clutch) (With Roller Clutch) 1995-Up	1	F8DZ-7D171-AA
582	96747	Planet, [AXOD] (Front) (With Bushing Inside of Shaft) (Sun Gear Has 2-Bushings) 86-90	1	
582	K96747	Planet Kit, [AXOD / AXODE / AX4S] (Front Planet & 6-Lug Sun Shell) 1986-96	1	F4DZ-7A398-A
582	96747A	Planet, [AXODE / AX4S] (Front) (W/ Bearing Inside of Shaft) (Sun Gear Has 1-Bushing) 1992-Up	1	
582	96747B	Planet, [AX4N] (Front) (Has 4-Large Pins Thru Gears & 4-Small Pins Thru Housing) 1995-Up	1	F5DZ-7A398-BA
583	K96731	Planet Assembly, [AXOD / AXODE / AX4S] (Front / Rear / Sun Shell / Ring Gear) (Bearing Type) (Shell has 1-Bushing Inside) (6-Lug Shell) 1986-97	1	
583	K96931A	Planet Assembly, [AXODE / AX4S] (Front / Rear / Sun Shell / Ring Gear) (Bearing Type) (36-Lug Sun Shell) 1995-Up (Rear Planet has 33-Internal Splines)	1	
583	K96731G	Planet Assembly, [AX4S] (Front / Rear / Sun Shell / Ring Gear) (Bearing Type) 2001-Up (With 36-Lug Sun Shell) (Rear Planet has 45-Internal Splines)	1	
583	K96731B	Planet Assembly, [AX4N] (Front / Rear / Sun Shell / Ring Gear) 1995-Up	1	
584	96731	Planet, [AXOD / AXODE / AX4S] (Rear) (33-Internal Splines) 1986-Up	1	E6DZ-7D006-A

584	96731B	Planet, [AX4S] (Rear) (45-Internal Splines) 2001-Up	1	
584	96731A	Planet, [AX4N] (Rear) 1995-Up	1	F4DZ-7D006-A
594	96730	Ring Gear, [AXOD / AXODE / AX4S / AX4N] (Rear Planet) 1986-Up	1	E6DZ-7A153-A
598	96821	Ring Gear, [AXOD / AXODE / AX4S] (Final Drive Planet) (17-Lugs) 1986-Up	1	E6DZ-7F343-A
598	96821B	Ring Gear, [AX4S] (Final Drive Planet) (23-Lugs) 2002-Up	1	2F1Z-7F343-AA
598	96821A	Ring Gear, [AX4N] (Final Drive Planet) (25-Lugs) 1995-2000	1	F4DZ-7A343-A
598	96821C	Ring Gear, [AX4N] (Final Drive Planet) (32-Lugs) (74 Teeth) 2001-Up	1	
598	96821D	Ring Gear, [AX4N] (Final Drive Planet) (32-Lugs) (71 Teeth) 2001-Up	1	
618	96832	Sun Gear, [AXOD /AXODE / AX4S] (Final Drive Planet) (30 Teeth) (4-1/8" Long) (33-Splines) 1986-Up	1	E6DZ-7F342-A
618	96832C	Sun Gear, [AX4S] (Final Drive Planet) (30 Teeth) (4-1/8" Long) (45-Splines) 2001-Up	1	
618	96832A	Sun Gear, [AX4N] (Final Drive) (30 Teeth) (5-1/4" Long) 1995-Up	1	F5DZ-7F342-A
618	96832D	Sun Gear, [4F50N] (Final Drive) (29 Teeth) (5-1/4" Long) (*Used W/ 5 Gear Final Drive) 2001-Up	1	1F2Z-7F342-AA
620	96839	Shell, [AXOD / AXODE] (With Sun Gear) (6-Lugs, 2-Bushings) 1986-93	1	E6DZ-7D064-A
620	96839A	Shell, [AXOD / AXODE] (With Sun Gear) (6-Lugs, 1-Bushing) 1993-97	1	
620	96839B	Shell, [AXODE / AX4S / AX4N] (With Sun Gear) (36-Lugs, 1-Bushing) 1993-Up	1	F5DZ-7D064-A
		SPRAGS & ONE WAY CLUTCHES		
652	96725	One Way Clutch, [AX4N] (Low / Intermediate) (Spring, Roller Cage) (7-Tab) 1995-Up	1	F5DZ-7A089-AB
656	96724	Sprag, [AXOD / AXODE/ AX4S] (Direct) (.500" Wide Cage) (Blue Plastic) 1986-Up (*Replaces Metal)	1	E6DZ-7A089-B
656	96724A	Sprag, [AXODE / AX4S / AX4N] (Direct) (.590" Wide Cage) (Grey Plastic) 1992-Up (*Can Use 36961B)	1	F3DZ-7A089-B
658	96727A	Sprag, [AXOD / AXODE / AX4S / AX4N] (Low Clutch) (30-Lugs) (*Replaces 16-Lug & 26-Lug Type)	1	E6DZ-7A089-A
		HARD PARTS (Continued)		
666	96833	Inner Race, [AXOD / AXODE] (Direct Overrun Clutch) (6-Lug) 1986-92	1	E6DZ-7G156-A
666	96833A	Inner Race, [AXODE / AX4S / AX4N] (Direct Overrun Clutch) (36-Lugs) (1/2" Wide Bushing) 1992-Up	1	F5DZ-7G156-A
666	96833B	Inner Race, [AX4S / AX4N] (Direct Overrun Clutch) (36-Lugs) (5/8" Wide Bushing) 95-Up	1	F5DZ-7G156-C
669	96840	Outer Race, [AXOD] (Overrun Clutch) (.500" Thick) (52 Teeth) 1986-90	1	E6DZ-7D171-A
669	96840A	Outer Race, [AXODE / AX4S / AX4N] (Overrun Clutch) (.720" Thick) (57 Teeth) 1991-Up	1	E6DZ-7B328-A
671	96855	Pump Shaft, [AXOD / AXODE / AX4S / AX4N] (Oil Pump Drive) 1986-Up	1	E6DZ-7B328-A
671	96855A	Pump Shaft, [AX4S / AX4N] 1998-Up (Hardened) (*Retros Back to 1986)	1	F8DZ-7B328-AA
671	96855-02K	Pump Shaft, [AXOD / AXODE / AX4S / AX4N / 4F50N] (Oil Pump Drive) 1986-Up	1	Sonnax
673	96854	Turbine Shaft, [AXOD / AXODE] (1-1/16" Long Splines) (23-Splines on Converter End) 1986-E93	1	E6DZ-7F213-A
673	96854A	Turbine Shaft, [AXOD / AXODE] (7/8" Long Splines) (23-Splines on Converter End) 1986-E96	1	
673	96854B	Turbine Shaft, [AXODE / AX4S / AX4N] (25-Splines on Converter End) L1993-Up	1	F4DZ-7F213-A
678	96805	Output Shaft, [AXOD / AXODE / AX4S] (18" Long) (35-Splines on Differential End) 1986-Up	1	E6DZ-7060-A
678	96805A	Output Shaft, [AX4N] (19-1/4" Long) (34-Splines on Differential End) 1995-Up	1	
678	96805B	Output Shaft, [AX4N] (19-1/4" Long) (35-Splines on Differential End) 1995-Up	1	F5DZ-7060-A
680	96410	Governor Assembly, [AXOD] 1986-90	1	E6DZ-7C053-A
680	96410D	"Dummy"Governor, [AXODE / AX4S] (13 Teeth Gear) (Electronic) (No Weights) 91-Up	1	E8DZ-7C053-B
683	96857	Gear, [AXOD / AXODE / AX4S] (Governor Drive) (42 Teeth) (White Plastic) 1986-Up	1	E7DZ-7G237-A
683	96857B	Gear, [AXOD / AXODE / AX4S] (Governor Drive) (24 Teeth) 1986-Up	1	
683	96857A	Gear, [AX4N] (Governor Drive) (24 Teeth) (Black Plastic) 1995-Up	1	F5DZ-7G237-A
686	96440A	Cover, [AXOD / AXODE / AX4S] (Governor) 1986-99	1	F6DZ-7A301-A

686	96440B	Cover, [AX4S] (Governor) 2000-Up	1	
690	96831	Gear, [AXOD / AXODE / AX4S] (Parking) (With Straight Inner Splines) 1986-Up	1	E6DZ-7A233-A
690	96831A	Gear, [AX4N] (Parking) (With 30-Spiral Inner Splines) 1995-Up	1	F5DZ-7A233-A
690	96831B	Gear, [AX4N] (Parking) (With 29-Spiral Inner Splines) 1995-Up	1	1F2Z-7A233-AA
700	96820	Chain, [AXOD / AXODE / AX4S / AX4N] (3/4" Wide) (Multi-Flex) (43-Links) 1986-Up	1	HV021
700	96820A	Chain, [AXOD / AXODE] (3.8L) (7/8" Wide) (Multi-Flex) (43-Links) 1986-88	1	HV029
700	96820B	Chain, [AXODE / AX4S / AX4N] (3/4" Wide) (Non Flex) (43-Links) 1993-03	1	HV075
700	96820C	Chain, [AX4S] (3/4" Wide) (Multi-Flex) (44-Links) 1995-Up (Windstar)	1	HV041
700	96820D	Chain, [AX4N] (7/8" Wide) (Non-Flex) (44-Links) 1995-Up (Lincoln 4.6L)	1	HV042
700	96820B	Chain, [AX4N] (3/4" Wide) (Non-Flex) (43-Links) 2004-Up (*For 2.5 & 3.0L)	1	HV075
700	96820F	Chain, [4F50N] (3/4" Wide) (44-Links) (2-Copper Links) (3.9L Engine) 2005-Up	1	HV092
705	96852D	Sprocket, [AXOD] (Drive) (34 Teeth) (.650" Wide Teeth) (3.890"OD) 1986-91	1	
705	96852E	Sprocket, [AXODE / AX4S/ AX4N] (Drive) (34 Teeth) (.650" Wide Teeth) (3.820"OD) (Cast # RFF8) 1991-Up	1	
705	96852F	Sprocket, [AXOD / AX4N] (Drive) (35 Teeth) (.650" Wide Teeth) (4.012"OD) 1986-Up	1	E6DZ-7G129-A
705	96852G	Sprocket, [AXODE / AX4S] (Drive) (35 Teeth) (.650" Wide Teeth) (3.950"OD) 1992-96	1	E8DZ-7G129-B
705	96852	Sprocket, [AXOD] (Drive) (37 Teeth) (.650" Wide Teeth) 1986-91	1	
705	96852H	Sprocket, [AXODE / AX4S] (Drive) (37 Teeth) (.650" Wide Teeth) (4.250"OD) 1992-96	1	E9DZ-7G129-A
705	96852B	Sprocket, [AXODE / AX4S / AX4N] (Drive) (38 Teeth) (.650" Wide Teeth) (4.380"OD) 1992-96	1	
705	96852A	Sprocket, [AXOD] (Drive) (38 Teeth) (.770" Wide Teeth) (4.380"OD) 1986-88	1	
705	96852C	Sprocket, [AX4N] (Drive) (38 Teeth) (.770" Wide Teeth) (4.300"OD) 1995-Up	1	
705	96852I	Sprocket, [AXOD] (Drive) (39 Teeth) (.650" Wide Teeth) (4.423"OD) 1986-91	1	
705	96852J	Sprocket, [AX4N] (Drive) (41 Teeth) (.650" Wide Teeth) (4.460"OD) 1995-Up	1	
706	96853G	Sprocket, [AXODE / AX4S] (Driven) (34 Teeth) (.650" Wide Teeth) (3.830"OD) 1992-Up	1	
706	96853H	Sprocket, [AXOD] (Driven) (35 Teeth) (.650" Wide Teeth) (4.015"OD) 1986-91	1	E6DZ-7G132-A
706	96853A	Sprocket, [AXOD] (Driven) (35 Teeth) (.770" Wide Teeth) (4.015"OD) 1986-88	1	
706	96853I	Sprocket, [AXODE / AX4S] (Driven) (35 Teeth) (.650" Wide Teeth) (4.015"OD) 1992-Up	1	
706	96853C	Sprocket, [AXODE / AX4S] (Driven) (35 Teeth) (.770" Wide Teeth) (4.015"OD) 1986-88	1	E9DZ-7G132-A
706	96853	Sprocket, [AXOD] (Driven) (36 Teeth) (.650" Wide Teeth) (4.135"OD) 1986-91	1	E8DZ-7G132-A
706	96853J	Sprocket, [AXODE / AX4S] (Driven) (36 Teeth) (.650" Wide Teeth) (4.135"OD) 1992-Up	1	
706	96853D	Sprocket, [AXODE / AX4S] (Driven) (38 Teeth) (.650" Wide Teeth) (4.306"OD) 1992-Up	1	
706	96853K	Sprocket, [AXODE / AX4S / AX4N] (Driven) (38 Teeth) (.650" Wide Teeth) (4.375"OD) 1992-Up	1	
706	96853L	Sprocket, [AXODE / AX4S] (Driven) (38 Teeth) (.650" Wide Teeth) (4.490"OD) 1992-Up	1	
706	96853B	Sprocket, [AXOD] (Driven) (39 Teeth) (.770" Wide Teeth) (4.420"OD) 1986-88	1	
706	96853F	Sprocket, [AXODE / AX4S] (Driven) (39 Teeth) (.650" Wide Teeth) (4.492"OD) 1992-Up	1	
706	96853E	Sprocket, [AXODE / AX4S / AX4N] (Driven) (39 Teeth) (.650" Wide Teeth) (4.420"OD) 1995-Up	1	
713	96843	Support, [AXOD / AXODE / AX4S] (Driven Sprocket) (Cast # RFE6SP-7G168-AA or RFF4-7G168-BA) 1986-Up	1	E6DZ-7F203-B
713	96843A	Support, [AX4N] (Driven Sprocket) (Cast # F4DP-7G168B) 1995-03	1	F5DZ-7G166-A
713	96843B	Support, [4F50N] (Driven Sprocket) (Cast # 4F1P-7G404DA) 2004-Up	1	
715	96822	Differential, [AXOD / AXODE / AX4S / AX4N] (35-Spline Axles) (Less Speed-O Gear) 1986-Up	1	E6DZ-7F465-A
715	96822B	Differential, [AX4N] (34-Spline Axles) (Less Speed-O Gear) (4 Gear Planet) 1995-Up	1	F5DZ-7F465-A
715	96822D	Differential, [4F50N] (5 Gear Planet) (Snap Ring Type) 2001-Up	1	
724	96729	Support, [AXOD] (Differential) (2-Bushing Type) 1986	1	E6DZ-7A130-A

AXOD/AXODE/AX4S/AX4N/4F50N

724	96729A	Support, [AXOD / AXODE] (Differential) (1-Bushing Type) (No Seal) 1986-92	1	
724	96729B	Support, [AXODE / AX4S] (Differential) (1-Bushing) (With Seal) (Cast # RFE9) (No Notch For Speed Sensor) 1993-99	1	E3DZ-7A130-A
724	96729D	Support, [AX4S] (Differential) (1-Bushing) (Cast # RFYF2P or RFE9) (With Notch For Speed Sensor) 2000-Up	1	YF2Z-7A103-AA
724	96729E	Support, [AX4N] (Differential) (Low / Intermediate Clutch Housing) (1.950" Tall) 1995	1	F5DZ-7A130-A
724	96729F	Support, [AX4N] (Differential) (Low / Intermediate Clutch Housing) (1.850" Tall) (Cast# RFF6) 1996-98	1	F6DZ-7A130-CB
724	96729G	Support, [AX4N] (Differential) (Low / Intermediate Clutch Housing) (1.850" Tall) (Cast# RFX3P) 1999-00	1	XF3Z-7A130-AA
724	96729H	Support, [AX4N / 4F50N] (Differential) (Low / Intermediate Clutch Housing) (1.850" Tall) (Cast# RF1F1) 2001-Up	1	1F1Z-7A130-BA
		VALVE BODIES (REBUILT)		
740	FD-3350	Valve Body, [AXOD] (RFE6) 1986	1	
740	FD-3351	Valve Body, [AXOD] (RFE7) 1987	1	
740	FD-3352	Valve Body, [AXOD] (3.0L) (9-Check Balls) 1988-90	1	
740	FD-3353	Valve Body, [AXOD] (3.8L) (10-Check Balls) 1988-90	1	
740	FD-3361	Valve Body, [AXODE] (Square Lock-Up) (Black Shift Solenoids) 1991	1	
740	FD-3362	Valve Body, [AXODE] (Tan Round Lock-Up) (Black Shift Solenoids) 1992	1	
740	FD-3363	Valve Body, [AX4S] (Tan Lock-Up) (#31 Plate Stamp) 1993-95	1	
740	FD-3364	Valve Body, [AX4S] (Tan Lock-Up) (#40, 41 Plate Stamp) 1993-95	1	
740	FD-3365	Valve Body, [AX4S] (Tan Lock-Up) (#53, 58 Plate Stamp) 1995	1	
740	FD-3366	Valve Body, [AX4S] (Tan Lock-Up) (#42 47, 50, 63, 67, 69, 97 Plate Stamp) 1996-97	1	
740	FD-3367	Valve Body, [AX4S] (Blue/Grey Lock-Up) (#98 Plate Stamp) (Cast # F4) 1997-98	1	
740	FD-3368	Valve Body, [AX4S] (Blue/Grey Lock-Up) (#94, 95, 99, 00 Plate Stamp) (Cast # XF) 1998-Up	1	
740	FD-3371	Valve Body, [AX4N] (2-Bolt Plate) (Casting # F4) (Tan Lock-Up) 1995-97	1	
740	FD-3372	Valve Body, [AX4N] (3-Bolt Plate) (Casting # F8 or XF1) (Blue/Grey Lock-Up) 1998-03	1	
740	FD-3373	Valve Body, [AX4N / 4F50N] (3-Bolt Plate) (Casting # 4F1P) 2004-Up	1	
		VALVE BODIES		
740	96201	Valve Body, [AXOD] (RFE6) (With Seperator Plate) 1986	1	E6DZ-7A100-A
740	96201B	Valve Body, [AXOD] (RFE7) (With Seperator Plate) 1987-88	1	E7DZ-7A100-A
740	96201C	Valve Body, [AXOD] (RF86) (With Seperator Plate) 1988-89	1	E8DZ-7A100-B
740	96201D	Valve Body, [AXOD] (RFE8)-(RF96) (With Seperator Plate) 1990	1	F0DZ-7A100-B
740	96201E	Valve Body, [AXODE] (RFF1)-(RFF3) (With Seperator Plate) 1991-93 (Cast # 90, 91)	1	E9OY-7A100-B
740	96201F	Valve Body, [AXODE / AX4S] (RFF48P)-(RFF4DP) (With Seperator Plate) 1994-99	1	
740	96201FG	Valve Body, [AX4S] (RFXF2P)-(7A092-AA) (With Seperator Plate) 2000-Up	1	
740	96201G	Valve Body, [AX4N] (RFF4DP)-(7A092-DC) (With Seperator Plate) 1995-97	1	
740	96201H	Valve Body, [AX4N] (RFF8DP)-(RFXF1P) (With Seperator Plate) 1997-03	1	
740	96201I	Valve Body, [AX4N] (RF4F1P)-(7A092-AF) (With Seperator Plate) 2004-Up	1	
		VALVE BODY COMPONENTS		
741	10000-01K	Relief Valve, [AXODE] (In Valve Body) (10 Per Kit) 1991-Up	1	Sonnax
741	76593	Check Ball, [AXOD / AXODE / AX4S / AX4N] (Valve Body) (.312" or 5/16") 1986-Up	AR	Torlon
741	96201-06K	Sleeve & Plunger, [AXOD] (By-Pass Clutch Control) (TCC Apply) 1986-91	1	Sonnax
741	96206-01K	Sleeve & Plunger Valve, [AXODE / AX4S] (By-Pass Clutch Control) (TCC Apply) 91-Up	1	Sonnax
741	96201-19K	Valve & Spring, [AXODE / AX4S] (By-Pass Clutch Control Valve & Plunger Spring) **(*Requires: 96201-TL)**	1	Sonnax

	96201-TL	Reamer Kit, [AXODE / AX4S] (By-Pass Clutch Control Valve) (*For 96201-19K) (Includes: Reamer, Guide, & Sizer)	1	Sonnax
741	SCAXODE	Sure Cure Kit, [AXODE] 1991-Up	1	Sonnax
741	96201-21K	Valve Kit, [AXODE / AX4S / AX4N] (Oversize) (Solenoid Regulator Valve Spring & Inner Clip)	1	Sonnax
	96201-TL2	Reamer Kit (2-Reamers), [AXODE / AX4S / AX4N] (Solenoid Regulator Valve) (*For 96201-21K)	1	Sonnax
741	96201-23K	Valve Kit, [AXODE / AX4S / AX4N] (Oversize) (Converter Regulator Valve, 2-Springs & 1-Clip)	1	Sonnax
	96201-TL3	Reamer Kit (2-Reamers), [AXODE / AX4S / AX4N] (Converter Regulator Valve) (*For 96201-23K)	1	Sonnax
741	96201-11	Clip Set, [AXOD / AXODE / AX4S / AX4N] (Backout Valve Clip) (Retainer) (1-Hump Type) (10 Per Set)	1	Sonnax
741	96201-10	Clip Set, [AXOD / AX0DE / AX4S / AX4N] (1-2 Capacity Modulator Valve Retainer) (10 Per Set)	1	Sonnax
741	96201-16K	Valve Kit, [AXOD / AXODE / AX4S] (Forward Control) (Valve & Spring) 1986-Up	1	Sonnax
	96201-BST	Tool, [AXOD / AXODE / AX4S] (Bore Sizing) (*For 96201-16K) 1986-Up	1	Sonnax
	96201-BST3	Tool, [AXOD / AXODE / AX4S] (Bore Sizing) (*For 1-2 Capacity Modulator Bore) (*Burnishes Ridges)	1	Sonnax
741	96206-03K	Sleeve & Plunger Valve, [AX4N] (By-Pass Clutch Control) (.486”OD) 1995-Up	1	Sonnax
741	96206-13K	Sleeve & Plunger Valve, [AX4N] (By-Pass Clutch Control) (.496”OD)	1	Sonnax
741	SCAX4N	Sure Cure Kit, [AX4N] (4F50N) **(*Requires: Tools 96206-TL, 96201-TL2, 96201-TL3, & 96206-BST)**	1	Sonnax
741	96948-01K	Valve & Sleeve, [AX4N] (Line Pressure Modulator) (.427”OD) 1995-97	1	Sonnax
741	36948-20K	Valve Kit, [AX4N] (Accumulator Pressure Control Valve) (Oversize & Spring)	1	Sonnax
	36948-TL	Reamer Kit, [AX4N] (Oversize Accumulator Valve) (*For 36948-20KK) (Includes: 2-Reamers, 1-Guide)	1	Sonnax
741	96206-07K	Valve Kit, [AX4N] (Forward Control) (Valve & Spring) 1995-Up **(*Use 96206-BST)**	1	Sonnax
	96206-BST	Tool, [AX4N] (Bore Sizing) (*For 96209-07K) 1995-Up	1	Sonnax
741	96201-05	Manual Valve, [AXOD / AXODE / AX4S] 1986-Up	1	Sonnax
741	96201-28	Spring Kit, [AXODE / AX4S / AX4N] (Main Pressure Regulator) (Elevated Pressure) (20-Springs)	1	Sonnax
741	96201-10K	Valve & Springs, [AXODE / AX4S] (Pressure Regulator Valve) (With 2-Springs) (Oversize) **(*Use 96206-TL2)**	1	Sonnax
	96201TL2	Reamer & Jig, (*For 96201-10K)	1	Sonnax
741	96201-09	Retainer, [AXODE / AX4S] (3-2 Shift Timing Valve Retainer) 1991-Up	1	Sonnax
741	96201-15K	Retainer Kit, [AXODE / AX4S] (3-2 Shift Timing Valve Cap & Retainer Clip) (5 each Per Kit) 1991-Up	1	Sonnax
741	96201-08K	Boost Valve & Sleeve, [AXOD / AXODE / AX4S / AX4N] (Factory Style) (3.8L) 1986-Up	1	Sonnax
741	96201-12K	Boost Valve & Sleeve, [AXOD / AXODE / AX4S / AX4N] (With O-Rings) (3.0L) 1986-Up	1	Sonnax
741	96201-13K	Boost Valve & Sleeve, [AXOD / AXODE / AX4S / AX4N] (Factory Style) (3.0L) 1986-Up	1	Sonnax
741	96201-01K	Boost Valve & Sleeve, [AXOD / AXODE / AX4S / AX4N] (With O-Rings) (3.4L SHO, 3.8L, 4.6L)	1	Sonnax
741	96201-18	Sleeve, [AXOD / AXODE / AX4N / AX4S] (Valve Body) (Steel) (Pump Shaft) 1986-Up	1	Sonnax
		HARD PARTS (Continued)		
755	96703	Cover, [AXOD] (Case) (Cast #RFE6SP-7G234-AA) 1986	1	E6DZ-7G188-A
755	96703A	Cover, [AXOD] (Case) (Cast #RFE7DP-7G234-AA) 1987	1	E7DZ-7G188-A
755	96703D	Cover, [AXOD] (Case) (Cast #RFE8DP-7G234-AA) (1-Wire Harness Type) 1988-90	1	F3DZ-7G188-A
755	96703C	Cover, [AXODE] (Case) (Cast # RF-F3DP-7G234BA) (1-Wire Harness Type) 1991-92	1	
755	96703E	Cover, [AXODE] (Case) (Cast # RF-F1DP-7G234AA) (2-Seperate Wire Harness Type) 1991-92	1	
755	96703CA	Cover, [AXODE / AX4S] (Case) (Cast # RFF6DP-7G234-AA) 1995-98	1	
755	96703CB	Cover, [AXODE / AX4S] (Case) (Cast # RFXF2P-7G234-AA) 1999	1	

AXOD/AXODE/AX4S/AX4N/4F50N

755	96703CC	Cover, [AXODE / AX4S] (Case) (Cast # RFYF2P-7G234-AA) 2000-Up	1	YF2Z-7G188-AA
755	96703F	Cover, [AX4N] (Case) (Cast # RFF4DP-7G234-BA) 1995-96	1	
755	96703G	Cover, [AX4N] (Case) (Cast # RFF6DP-7G234-BA) 1997-99	1	F6DZ-7G188-B
755	96703H	Cover, [AX4N] (Case) (Cast # RFYF1P-7G234-AC) 2000-Up	1	YF1Z-7G188-AC
755	96803	Sleeve Kit, [AXOD / AXODE / AX4S / AX4N] (Channel Plate Repair) (5 Per Kit) 1986-Up	1	Sonnax
760	96872	Case, [AXOD] (3.0L & 3.8L) 1986-91	1	
760	96872A	Case, [AXODE / AX4S] (3.0L & 3.8L) 1991-95	1	
760	96872AA	Case, [AXODE / AX4S] (3.2L) 1993-95	1	
760	96872AB	Case, [AXODE / AX4S] (Cast # RFF6) (3.0L & 3.8L) 1996-Up	1	
760	96872AC	Case, [AX4S] (3.0L & 3.8L) (With Sensor) (Cast # RFX2) 1999	1	
760	96872AD	Case, [AX4S] (3.0L & 3.8L) (With Sensor) (Cast # RFYF-2P-AA) 2000-01	1	
760	96872AE	Case, [AX4S] (Cast # RF1F1) (4-7/8" Top Bolts) 2002-Up	1	
760	96872B	Case, [AX4N] (3.0L) (SOHC) (Cast # RFF6) (4-7/8" Top Bolts) (With Speed-O Hole) 1995-00	1	
760	96872C	Case, [AX4N] (3.0L) (DOHC) (Square Starter) (3-1/4" Top Bolt) (With Speed-O Hole) 1995-00	1	
760	96872D	Case, [AX4N] (Cast # RF1F1) (Square Starter Hole) (3-1/4" Top Bolts) (No Speed-O Hole) (With Sensor on Top Center of Case) 2001-Up	1	
760	96872E	Case, [AX4N] (Square Starter) (3-1/4" Top Bolts) (No Speed-O Hole) (W/ Sensor on Top Center of Case) (Cast #RFYF!P-AB)	1	
760	96872F	Case, [AX4N] (4.6L) (Square Starter Hole) (5-1/2" Top Bolts) (No Speed-O Hole) 95-00	1	
760	96872G	Case, [AX4N] (Cast # RF1F1P) (4-7/8" Top Bolts) (No Speed-O Hole) (Sensor Top Center) 2000-Up	1	1F1Z-7005-AA
760	96872H	Case, [AX4N] (Cast # RFYF1P) (4-7/8" Top Bolts) (No Speed-O Hole) (Sensor Top Center) 2001-Up	1	YF1Z-7005-AA
760	96872I	Case, [AX4N] (Cast # RF4F2P) (4-7/8" Top Bolts) (No Speed-O Hole) (Sensor Top Center)	1	
764	96867	Spacer, [AX4N] (Between Differential Ring Gear & Differential Support) 1995-Up	1	
765	96705	Pan, [AXOD / AXODE / AX4S] (Bottom) (10mm Pan Bolts) (*All Except SHO) 1986-95 (Raised Bolt Holes)	1	E6DZ-7A194-A
765	96705C	Pan, [AX4S] (Bottom) (8mm Pan Bolts) 1996-Up	1	
765	96705B	Pan, [AX4N] (Bottom) (Flat Surface For Gasket) 1995-Up	1	F5DZ-7A194-A
765	96705A	Pan, [AX4N] (Bottom) (*Not SHO) (Raised Bolt Holes) (Stamped "AX4N Metric") 95-Up	1	F6DZ-7A194-A
766	96704	Pan, [AXOD / AXODE / AX4S] (Side) (Raised Bolt Holes For Gasket) 1986-Up	1	E6DZ-7G004-A
766	96704C	Pan, [AXOD / AXODE / AX4S] (Side) (Flat Surface For Gasket) 1986-Up	1	
766	96704B	Pan, [AX4N] (Side) (Flat Surface For Gasket) (Tin) (Stamped AX4N) 1995-Up	1	
766	96704E	Pan, [AX4N / 4F50N] (Side) (Flat Surface For Gasket) (Tin) (Stamped 4F50N) 2001-Up	1	YF1Z-7G004-BA
766	96704D	Pan, [4F50N] (Side) (Aluminum With 4-Mounting Holes) (Cast # 1F2P-7F395-AA) 01-Up	1	1F2Z-7G004-AB
774	36951	Sensor,Speed [AXOD / AXODE] (2-Pin Connector) (VSS) (*Uses a Cable) 1986-99	1	
774	96958D	Sensor, [AX4S / AX4N] (Vehicle Speed) (Magnet Generator Type) L1999-Up	1	
774	96951A	Sensor,Speed [AXOD / AXODE] (VSS) (2-Pin Connector) (*Does Not Use Cable) 1986-Up	1	E9LZ-9E731-A
774	96958	Sensor,Speed [AX4N] (VSS) (2-Pin Connector) (*Uses a Cable) 1986-Up	1	E9TZ-9E731-A
774	96958A	Sensor,Speed [AX4N] (VSS) (2-Pin Connector) (*Does Not Use a Cable) 1995-E99	1	F5DZ-9E731-BA
774	96958E	Sensor,Speed [AX4N / 4F50N] (VSS) (Magnet Generator Type) 2000-Up	1	
	N-61	Nut, [AXOD / AXODE / AX4S / AX4N] (Converter) (Metric) 1986-Up	4	
779	96704-01	Pan Bolt, [AXOD / AXODE / AX4S / AX4N] (Metric) (Bag of 100ea)	1	Sonnax
848	96862	Gear, [AXOD / AXODE] (Speed-O Drive) (7 Teeth) 1986-Up	1	E6SP-17285
848	96862A	Gear, [AXOD / AXODE] (Speed-O Drive) (8 Teeth) 1986-Up	1	

848	96862B	Gear, [AXOD / AXODE] (Driven Speed-O) (Red, 21 Teeth) (*Fits Into # 774)	1	
852	96116A	Cushion, [AXOD / AXODE / AX4S] (Direct Clutch) 1986-Up	1	
854	96115	Cushion, [AXOD / AXODE / AX4S] (Reverse Clutch) 1986-Up	1	E6DZ-7E085-A
857	96119	Cushion, [AX4N] (Low / Intermediate Clutch) 1995-Up	1	F5DZ-7E085-A
	K96928	Snap Ring Kit, [AXOD / AXODE / AX4S] 1986-Up	1	69860
	K96928B	Snap Ring Kit, [AX4N] 1995-Up	1	
870	96603	Snap Ring, [AX4N] (Holds Low / Intermediate Pressure Plate In) **(*Specify Thickness*)** 1995-Up	1	F5DZ-7D483-F
877	96604	Snap Ring, [AXOD / AXODE / AX4S / AX4N] (Retainer to Forward Drum) 1986-Up	1	
878	96601	Snap Ring, [AXOD / AXODE / AX4S / AX4N] (Forward / Direct / Intermediate) (.049") 1986-Up	1	E8DZ-7D483-A
878	96601A	Snap Ring, [AXOD / AXODE / AX4S / AX4N] (Forward / Direct / Intermediate) (.067") 1986-Up	1	E8DZ-7D483-B
878	96601B	Snap Ring, [AXOD / AXODE / AX4S / AX4N] (Forward / Direct / Intermediate) (.086") 1986-Up	1	E8DZ-7D483-AC
878	96601C	Snap Ring, [AXOD / AXODE / AX4S / AX4N] (Forward / Direct / Intermediate) (.104") 1986-Up	1	F8DZ-7D483-AE
878	96601D	Snap Ring, [AXOD / AXODE / AX4S / AX4N] (Forward / Direct / Intermediate) (.121") 1986-Up	1	F8DZ-7D483-AF
879	96605	Snap Ring, [AXOD / AXODE / AX4S / AX4N] (Holds Retainer In Direct Clutch) 1986-Up	1	E6DZ-7C122-A
880	96606	Snap Ring, [AXOD / AXODE / AX4S / AX4N] (Drive Sprocket to Turbine Shaft) 1986-Up	1	N803178-S
882	96730RR	Retaining Ring, [AXOD / AXODE] (Rear Ring Gear) (Prevents Rear Ring Gear Pop Out) 1986-Up	1	Sonnax
882	96607	Snap Ring, [AX4N] (Front Planet to Rear Ring Gear) 1995-Up	1	
890	96608	Snap Ring, [AXOD / AXODE / AX4S] (Holds Differential Support) (Flat) 1986-Up	1	
890	96608A	Snap Ring, [AX4N] (Holds Differential Support In Case) (Tapered) 1995-Up	1	F6DZ-7D144-AA
892	96602	Snap Ring, [AXOD / AXODE / AX4S / AX4N] (Holds Reverse Clutch Pressure Plate In) (.062") 1986-Up	1	
892	96602A	Snap Ring, [AXOD / AXODE / AX4S / AX4N] (Holds Reverse Clutch Pressure Plate In) (.080") 1986-Up	1	
892	96602B	Snap Ring, [AXOD / AXODE / AX4S / AX4N] (Holds Reverse Clutch Pressure Plate In) (.098") 1986-Up	1	
892	96602C	Snap Ring, [AXOD / AXODE / AX4S / AX4N] (Holds Reverse Clutch Pressure Plate In) (.117") 1986-Up	1	
900	K96942	Servo Assembly, [AXOD / AXODE / AX4S / AX4N] (Overdrive) (No Groove) 1986-97	1	
900	K96943	Servo Assembly, [AXOD / AXODE / AX4S / AX4N] (Overdrive) (1-Groove) 1986-97	1	
900	K96944	Servo Assembly, [AXOD / AXODE / AX4S / AX4N] (Overdrive) (2-Grooves) 1986-97	1	
900	K96628A	Servo Assembly, [AXODE / AX4S / AX4N] (Overdrive) (No Groove) 1998-Up	1	
900	K96628B	Servo Assembly, [AXODE / AX4S / AX4N] (Overdrive) (1-Groove) 1998-Up	1	
900	K96628C	Servo Assembly, [AXODE / AX4S / AX4N] (Overdrive) (2-Grooves) 1998-Up	1	
901	96708	Spring, [AXOD / AXODE / AX4S / AX4N] (Overdrive Servo) (1.700"OD) 1986-Up	1	E6DZ-7F201-A
902	96628	Piston, [AXOD / AXODE / AX4S / AX4N] (Overdrive Servo) 1986-97	1	F3DZ-7F200-A
903	96942	Pin, [AXOD / AXODE / AX4S / AX4N] (Overdrive Servo) (No Groove) 1986-97	1	
903	96943	Pin, [AXOD / AXODE / AX4S / AX4N] (Overdrive Servo) (1-Groove) 1986-97	1	
903	96944	Pin, [AXOD / AXODE / AX4S / AX4N] (Overdrive Servo) (2-Grooves) 1986-97	1	
903	96628A	Pin, [AXODE / AX4S / AX4N] (Overdrive Servo) (No Groove) (W/Bonded Piston) 98-Up	1	F88Z-7H188-AA
903	96628B	Pin, [AXODE / AX4S / AX4N] (Overdrive Servo) (1-Groove) (With Bonded Piston) 98-Up	1	F88Z-7H188-BA
903	96628C	Pin, [AXODE / AX4S / AX4N] (Overdrive Servo) (2-Grooves) (With Bonded Piston) 1998-Up	1	F88Z-7H188-CA
904	96883A	Cover, [AXOD / AXODE / AX4S / AX4N] (Overdrive Servo) 1986-Up	1	E6DZ-7D027-B

905	K96945	Servo Assembly, [AXOD / AXODE / AX4S] (Low / Intermediate) (No Groove Pin) 86-Up	1	
905	K96946	Servo Assembly, [AXOD / AXODE / AX4S] (Low / Intermediate) (1-Groove Pin) 1986-Up	1	
905	K96947	Servo Assembly, [AXOD / AXODE / AX4S] (Low / Intermediate) (2-Groove Pin) 1986-Up	1	
905	K96948	Servo Assembly, [AXOD / AXODE / AX4S] (Low / Intermediate) (3-Groove Pin) 1986-Up	1	
905	K96949	Servo Assembly, [AXOD / AXODE / AX4S] (Low / Intermediate) (4-Groove Pin) 1986-Up	1	
906	96995A	Spring, [AXOD / AXODE / AX4S] (Low / Intermediate Servo) 1986-Up	1	Sonnax
907	96728	Piston, [AXOD / AXODE / AX4S] (Low / Intermediate Servo) 1986-Up	1	Sonnax
908	96945R	E-Clip Set, [AXOD] (Low / Intermediate Servo Pin) (5 Per Kit)	1	Sonnax
	96945S	Pin Kit, [AXOD / AXODE / AX4S] (Low / Internediate Servo) (Includes: Pin, Retainer Clip, & 3- O-Rings) 1986-Up	1	Sonnax
	96946E	Pin, [AXOD / AXODE / AX4S] (Low / Intermediate Servo Extendo Pin) 1986-Up	1	Teckpak
908	96945	Pin, [AXOD / AXODE / AX4S] (Low / Intermediate Servo) (No Groove) 1986-Up	1	E6DZ-7D190-A
908	96946	Pin, [AXOD / AXODE / AX4S] (Low / Intermediate Servo) (1-Groove) 1986-Up	1	E6DZ-7D190-B
908	96947	Pin, [AXOD / AXODE / AX4S] (Low / Intermediate Servo) (2-Grooves) 1986-Up	1	E6DZ-7D190-C
908	96948	Pin, [AXOD / AXODE / AX4S] (Low / Intermediate Servo) (3-Grooves) 1986-Up	1	E6DZ-7D190-D
908	96949	Pin, [AXOD / AXODE / AX4S] (Low / Intermediate Servo) (4-Grooves) 1986-Up	1	E6DZ-7D190-E
909	96882A	Cover, [AXOD / AXODE / AX4S] (Low / Intermediate Servo) 1986-Up	1	
910	K96864	Servo Assembly, [AX4N] (Coast) 1995-Up	1	
911	96709A	Spring, [AX4N] (Coast Servo) 1995-Up	1	F5DZ-7H291-A
912	96863	Piston, [AX4N] (Coast Servo) (Bonded) 1995-Up	1	XF32-7H281-AA
914	96864	Cover, [AX4N] (Coast Servo) (Bonded) 1995-Up	1	F5DZ-7H284-A
915	96699	Band Guide/Plug, [AXOD / AXODE / AX4S] (Overdrive Band) (Plastic) 1986-Up	1	
	96512-3K	Piston & Sleeve Kit, [AXOD / AXODE / AX4S] (Neutral-Drive, 1-2 & 3-4 Accumulator) (Pistons, Sleeves & O-Rings)	1	Sonnax
926	96706	Spring, [AXOD / AXODE / AX4S] (1-2 Accumulator) (3.0L) (Yellow) (Outer) 1986-Up	1	E6DZ-7G267-A
926	96706-02K	Spring KIt, [AXOD / AXODE / AX4S] (1-2 Shift Tuning) (1-Large, 1-Medium, 1-Small, 1-2 Accumulator)	1	Sonnax
926	96706K	Spring, [AXOD / AXODE / AX4S] (1-2 Accumulator) (3.8L) (Tan) (Outer) 1986-Up	1	E8DZ-7G267-A
926	96706L	Spring, [AXOD / AXODE / AX4S] (1-2 Accumulator) (Purple) (Outer) 1986-94	1	F58Z-7G267-A
926	96706S	Spring, [AX4N] (1-2 Accumulator) (1.440” Long) (1.308”OD) (.110”OD Wire) 1995-Up	1	F5DZ-7G267-A
927	96998	Piston, [AXOD / AXODE / AX4S] (1-2 Accumulator) (2.116”OD) 1986-Up	1	
927	96998B	Piston, [AX4N] (1-2 & 2-3 Accumulator) 1994-Up	1	
927	96513K	Piston & Sleeve Kit, [AXOD / AXODE / AX4S] (*For 1-2 Accumulator) (Pistons, Sleeves & O-Rings) 1986-Up	1	Sonnax
928	96858	Pin, [AXOD / AXODE / AX4S] (Neutral-Drive, 1-2 & 3-4 Accumulator) (*Also [AX4N] 1-2, 2-3, 3-4, & Reverse) 1986-Up	3-4	E6DZ-7G094-A
929	96706M	Spring, [AXOD / AXODE / AX4S] (1-2 Accumulator) (Inner Spring of 2-Spring Set Up) (Yellow) 1989-90	1	E6DZ-7G326-A
929	96706N	Spring, [AXOD / AXODE / AX4S] (1-2 Accumulator) (Inner) (Brown) 1986-Up	1	E8DZ-7G326-A
929	96706P	Spring, [AXOD / AXODE / AX4S] (1-2 Accumulator) (Inner) (Purple) 1986-Up	1	E8DZ-7G326-A
929	96706PP	Spring, [AXOD / AXODE / AX4S] (1-2 Accumulator) (Inner) (Pink) 1986-Up	1	E8DZ-7G358-A
931	96715	Spring, [AX4N] (2-3 Accumulator) (1.500” Long) (1.324”OD) (.110”OD Wire) 1995-Up	1	F5DZ-7F285-A
932	96998C	Piston, [AX4N] (2-3 Accumulator) 1995-Up	1	
936	96706B	Spring, [AXOD / AXODE / AX4S] (3-4 Accumulator) (Outer) (Green) 1986-Up	1	E6DZ-7G266-A
936	96706D	Spring, [AXOD / AXODE / AX4S] (3-4 Accumulator) (Outer) (White) 1986-Up	1	F8DZ-7G266-AA
936	96706C	Spring, [AXOD / AXODE / AX4S] (3-4 Accumulator) (Outer) (Natural) (1.445” Long) (1.207”OD) (.105” Wire) 1986-Up	1	E8DZ-7G260-A
936	96706F	Spring, [AX4N] (3-4 Accumulator) (1.235” Long) (1.305”OD) (.108”OD Wire) 1995-Up	1	F5DZ-7G266-A
937	96998A	Piston, [AXOD / AXODE / AX4S / AX4N] (3-4 Accumulator) (1.670”OD) 1986-Up	1	E6DZ-7F287-A

937	96512K	Piston & Sleeve Kit, [AXOD / AXODE / AX4S] (*For 3-4 Accumulator) (Pistons, Sleeves & O-Rings) 1986-Up	1	Sonnax
939	96706E	Spring, [AXOD / AXODE / AX4S] (3-4 Accumulator) (Inner) (Blue) (1.440" Long) (.880"OD) (.075" Wire)	1	E6DZ-7F288-A
939	96906EA	Spring, [AXOD / AXODE / AX4S] (3-4 Accumulator) (Inner) (No Color) (1.810" Long) (.885"OD) (.071" Wire)	1	
946	96709	Spring, [AX4N] (Reverse Accumulator) (1.380" Long) (.964"OD) (.089"OD Wire) 95-Up	1	F8OZ-7E485-BA
947	96998D	Piston, [AX4N] (Reverse Accumulator) (1.360"OD) 1995-Up	1	
950	K96992A	Accumulator Assembly, [AX4N] (Neutral-Drive) (1-Spring Type) 1995-Up	1	
950	K96992B	Accumulator Assembly, [AX4N] (Neutral-Drive) (2-Spring Type) 1995-Up	1	
951	96709AA	Spring, [AXOD / AXODE / AX4S] (Neutral-Drive Accumulator) (Outer) 1986-Up	1	E6DZ-7G300-A
951	96709AB	Spring, [AXOD / AXODE / AX4S] (Neutral-Drive Accumulator) (Inner) 1986-Up	1	E6DZ-7G301-A
951	96709AC	Spring, [AX4N] (Neutral-Drive) (1-Spring Type) (1.190" Long) (1.295"OD) (.105"OD Wire) 1995-Up	1	
951	96709AD	Spring, [AX4N] (Neutral-Drive) (2-Spring Type) (Outer) (1.225" Long) (1.472"OD) (.098"OD Wire)	1	
951	96709AE	Spring, [AX4N] (Neutral-Drive) (2-Spring Type) (Inner) (1.200" Long) (1.157"OD) (.080"OD Wire)	1	
952	96998B	Piston, [AXOD / AXODE / AX4S] (Neutral-Drive Accumulator) (1.932"OD) 1986-Up (*Also [AX4N] 1-2 & 2-3 Accumulator) 1994-Up	1	F5DZ-7F251-A
952	96511K	Piston & Sleeve Kit, [AXOD / AXODE / AX4S] (Neutral-Drive Accumulator) (Pistons, Sleeves & O-Rings) 1986-Up	1	Sonnax
954	96709AF	Spring, [AXOD / AXODE / AX4S] (Neutral-Drive Accumulator) (Inner) 1986-Up	1	E6DZ-7G301-A
954	96884A	Cover, [AX4N] (Neutral-Drive Accumulator) 1995-Up	1	F5DZ-7H275-A
962	96837	Piston, [AXOD / AXODE / AX4S] (Intermediate Clutch) (Aluminum) 1986-Up	1	E6DZ-7E005-A
962	K96941B	Piston Kit, [AX4S] (Bonded) (7-Pistons) 1993-Up (Windstar 3.8L) (SHO 1993-95)	1	
962	96837A	Piston, [AX4S / AX4N] (Intermediate Clutch) (Bonded) 1995-Up	1	4F1Z-7E005-AA
962	K96941C	Piston Kit, [AX4N] (Bonded) (6-Pistons) 1995-Up	1	
963	96837D	Piston Housing, [AX4N] (Intermediate Clutch Return) 1995-Up (*Also [AX4S] Windstar 3.8L) 1996-Up	1	F3DZ-7H185-A
964	96941AA	Piston, [AXOD / AXODE / AX4S] (Forward Clutch) (Aluminum) 1986-Up	1	F1DZ-7A262-A
964	96941	Piston, [AXOD / AXODE / AX4S] (Forward Clutch) (Steel) 1986-Up	1	F4DZ-7A262-A
964	96941B	Piston, [AXOD / AXODE / AX4S] (Forward Clutch) (Steel) (Taurus SHO) 1993-Up	1	F4DZ-7A262-B
964	96941A	Piston, [AX4S / AX4N] (Forward Clutch) (Bonded) 1994-Up (.476" Thick) (*For 4-Clutch Drum)	1	F8DZ-7A262-AB
964	96941C	Piston, [AX4S / AX4N] (Forward Clutch) (Bonded) 1994-Up (.644" Thick) (*For 3-Clutch Drum)	1	F8AZ-7A262-A
965	96940	Piston, [AXOD / AXODE / AX4S] (Direct Clutch) 1986-Up	1	E6DZ-7A262-A
965	96940A	Piston, [AX4S / AX4N] (Direct Clutch) (Bonded) (With Check Valve) 1995-Up	1	
966	96830	Piston, [AXOD / AXODE / AX4S / AX4N] (Reverse Clutch) 1986-Up	1	E6DZ-7D402-A
967	96841	Piston, [AX4N] (Low / Intermediate Clutch) (Bonded) 1995-04	1	F5DZ-7H298-A
972	96763	Retainer W/Springs, [AXOD / AXODE / AX4S / AX4N] (Intermediate Clutch) 1986-Up	1	E6DZ-7F222-A
974	96823	Retainer W/Springs, [AXOD / AXODE / AX4S] (Forward Clutch) 1986-Up	1	
974	96823A	Retainer W/Springs, [AX4N] (Forward Clutch) 1995-Up	1	F8DZ-7F194-AA
975	96762	Retainer W/Springs, [AXOD / AXODE / AX4S / AX4N] (Direct Clutch) 1986-Up	1	F1DZ-7F235-A
976	96761	Retainer W/Springs, [AXOD / AXODE / AX4S / AX4N] (Reverse Clutch) 1986-Up	1	E6DZ-7G335-A
977	96866	Retainer W/Springs, [AX4N] (Low / Intermediate Clutch) 1995-Up (*Also Has a Washer)	1	F5DZ-7H266-A
991	K96676	Linkage Assembly, [AXOD / AXODE / AX4S] (Internal) 1986-99	1	
991	K96676A	Linkage Assembly, [AX4S] (Internal) 2000-Up	1	
991	K96676B	Linkage Assembly, [AX4N] (Internal) 1995-99	1	

991	K96676C	Linkage Assembly, [AX4N] (Internal) 2000-Up	1	
994	96677	Park Rod Actuator, [AXOD / AXODE / AX4S] (14-3/4") 1986-99	1	
994	96677A	Park Rod Actuator, [AX4N] (16-1/8") 1995-Up	1	F5DZ-7A232-A
995	K96678	Park Pawl Assembly, [AXOD / AXODE / AX4S / AX4N] 1986-99	1	
995	K96678A	Park Pawl Assembly, [AX4S / AX4N] 2000-Up	1	
996	K31292	Cooler Line Fitting, [AXOD / AXODE / AX4S / AX4N] (18mm) 1986-Up	2	
996	96289	Cooler Line Fittting, [AXODE / AX4S / AX4N] (20mm) 1992-Up	2	F7DZ-7D273-AA
996	FS210	Clip, [AXOD / AXODE / AX4S / AX4N] (Cooler Line Retainer For 18mm Fittings) 86-Up	2	
996	FS211	Clip, [AXODE / AX4S / AX4N] (Cooler Line Retainer For 20mm Fittings) 1992-Up	2	
997	96617	Wire Link, [AXOD] (T.V. Cable) 1986-90	1	
999	K96679	Tube Set, [AXOD] (Early Non-Electric) 1986-90	1	
999	96873A	Lube Tube, [AXOD / AXODE] (Speed-O) (Update) 1991-Up	1	F2DZ-7G086-A
999	96873	Lube Tube, [AXOD] (Rear Planet Lube) (Early) 1991-92	1	F2DZ-7G084-A
999	96874	Lube Tube, [AXOD / AXODE] (Rear Planet Lube) (Update) 1993-98	1	F3DZ-7G084-A
999	96874A	Lube Tube, [AX4S] (Rear Planet Lube) (With Squirter) 1999-Up	1	
999	96806	Bracket, [AXOD / AXODE] (Holds Lube Tubes In) 1986-Up	1	Sonnax
999	K96806	Bracket Set, [AXOD / AXODE / AX4N] (Holds Lube Tubes In) (3 Per Set) 1986-Up	1	
999	K96679A	Tube Set, [AXODE] 1991-Up	1	
999	K96679B	Tube Set, [AX4S] 1995-98	1	
999	K96679C	Tube Set, [AX4S] 1999-Up	1	
999	K96679D	Tube Set, [AX4N] 1995-Up	1	

CD4E (FORD)/LA4A-EL (MAZDA)

FWD 4 Speed

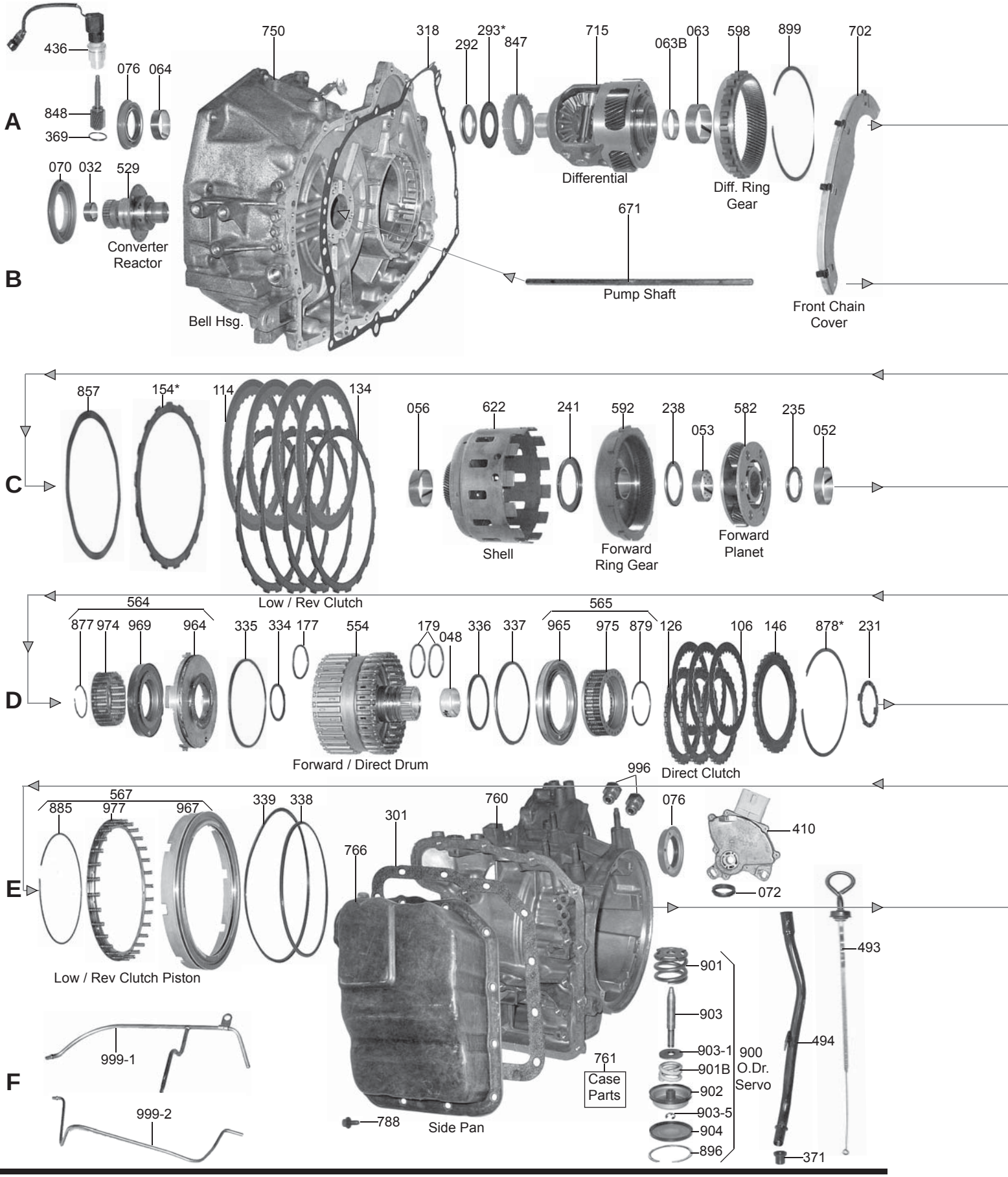

CD4E (FORD)/LA4A-EL (MAZDA)

FWD 4 Speed

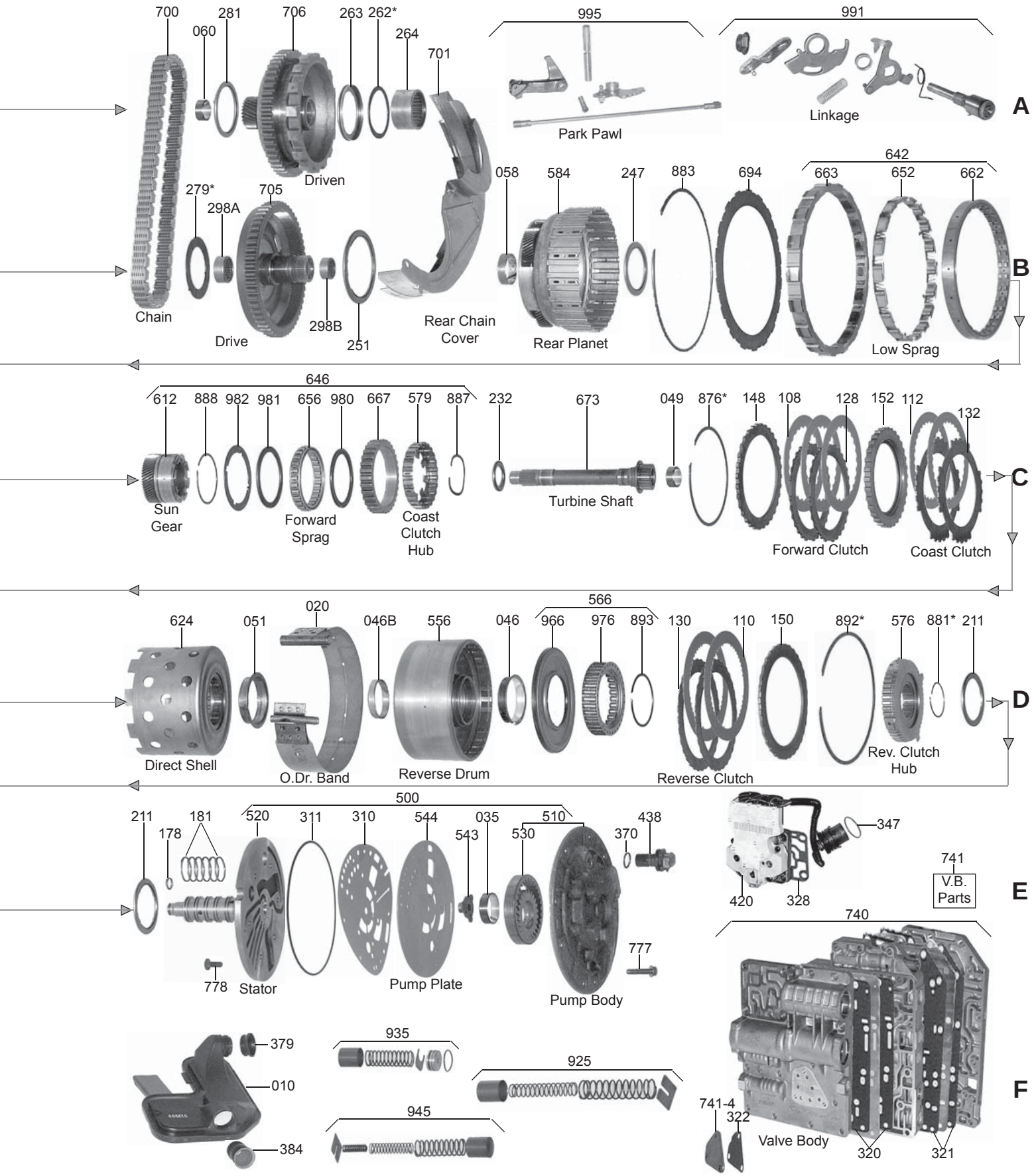

CD4E (FORD)/LA4A-EL (MAZDA)

ILL#	PART#	DESCRIPTION	QTY	REF #
		OVERHAUL KITS		
	K73900	Overhaul Kit, [CD4E] (Without Bonded Pistons) 1994-02	1	
	K73900P	Overhaul Kit, [CD4E] (With Bonded Pistons) 1994-02	1	
	K73900A	Overhaul Kit, [CD4E] (Without Bonded Pistons) 2003-Up	1	
	K73900AP	Overhaul Kit, [CD4E] (With Bonded Pistons) 2003-Up	1	
		MASTER L/STEEL KIT		
	DK7300-S	Master L/Steels Kit, [CD4E] (Without Bonded Pistons) 1994-97	1	
	DK7300P-S	Master L/Steels Kit, [CD4E] (With Bonded Pistons) 1994-97	1	
	DK7300B-S	Master L/Steels Kit, [CD4E] (Without Bonded Pistons) (Hi-Energy Frictions) 1998-02	1	
	DK7300BP-S	Master L/Steels Kit, [CD4E] (With Bonded Pistons) (Hi-Energy Frictions) 1998-02	1	
	DK7300A-S	Master L/Steels Kit, [CD4E] (Without Bonded Pistons) (Hi-Energy Frictions) 2003-Up	1	
	DK7300AP-S	Master L/Steels Kit, [CD4E] (With Bonded Pistons) (Hi-Energy Friction) 2003-Up	1	
		MASTER W/STEEL KIT		
	DK7300	Master W/Steels Kit, [CD4E] (Without Bonded Pistons) 1994-97	1	
	DK7300P	Master W/Steels Kit, [CD4E] (With Bonded Pistons) 1994-97	1	
	DK7300B	Master W/Steels Kit, [CD4E] (Without Bonded Pistons) (Hi-Energy Frictions) 1998-02	1	
	DK7300BP	Master W/Steels Kit, [CD4E] (With Bonded Pistons) (Hi-Energy Frictions) 1998-02	1	
	DK7300A	Master W/Steels Kit, [CD4E] (Without Bonded Pistons) (Hi-Energy Frictions) 2003-Up	1	
	DK7300AP	Master W/Steels Kit, [CD4E] (With Bonded Pistons) (Hi-Energy Friction) 2003-Up	1	
		FILTER		
010	73710	Filter, [CD4E] 1994-Up	1	F3RZ-7A098-A
		FILTER KIT		
	FK73710	Filter Kit, [CD4E] 1994-Up **(**Transmission must be Disassembled to Service)**	1	
		BANDS		
020	73700	Band, [CD4E] (Overdrive) (1.658" Wide) 1994-95	1	F3RZ-7D034-A
020	73700A	Band, [CD4E] (Overdrive) (2.047" Wide) (4 Cylinder & V6) (High Energy) 1994-Up	1	F4RZ-7D034-A
020	73700B	Band, [CD4E] (Overdrive) (2.047" Wide) (SUV) (High Energy) 2001-Up	1	
		BUSHINGS		
	K73905	Bushing Kit, [CD4E] 1994-Up	1	
	73001	Bushing, [CD4E] (Converter Hub) (1.772"ID)	1	F3RP-7N805-AA
032	73003	Bushing, [CD4E] (Converter Reactor) (.935"ID)	1	F3RP-7N817-AA
035	73011	Bushing, [CD4E] (Inner Pump Gear) (1.358"ID)	1	F3RP-7B259-BA
046	73014	Bushing, [CD4E] (Reverse Clutch Drum) (With Shoulder) (Rear)	1	F3RP-7F217-AA
046B	73015	Bushing, [CD4E] (Reverse Clutch Drum) (Front)	1	F3RP-7F218-AA
048	73012	Bushing, [CD4E] (Direct & Forward Clutch Drum)	1	F3RP-7H209-AB
049	73002	Bushing, [CD4E] (Turbine Shaft)	1	F3RP-7H025-AA
051	73010	Bushing, [CD4E] (Direct Hub & Shell)	1	F3RP-7H240-AA
052	73006	Bushing, [CD4E] (Forward Sun Gear)	1	F3RP-7F366-AA
053	73005	Bushing, [CD4E] (Forward Planet)	1	F3RP-7H034-AA
056	73004	Bushing, [CD4E] (Reverse Sun Gear Shell)	1	F3RP-7H033-AB
058	73013	Bushing, [CD4E] (Reverse Planet)	1	F3RP-7H043-AA
060	73009	Bushing, [CD4E] (Driven Sprocket)	1	F3RP-7G344-AA

CD4E (FORD)/LA4A-EL (MAZDA)

063	73007	Bushing, [CD4E] (Differential) (Left) (Housing to Driven Sprocket) (2.061”ID)	1	F3RP-7H040-AA
063B	73008	Bushing, [CD4E] (Differential) (Right) (Housing to Axle Spider Gear) (1.620”ID)	1	F3RP-7H041-AA
064	96012	Bushing, [CD4E] (Bell Housing to Differential) (Behind Axle Seal) (1.410”ID)	1	
		METAL CLAD SEALS		
070	73151	Seal, [CD4E] (Converter Hub)	1	F3RZ-7F401-A
072	86153	Seal, [CD4E] (Manual Lever) (Park Shaft) (Large)	1	E1FZ-7B498-A
072	96154	Seal, [CD4E] (Manual Lever) (Manual Shaft) (Small)	1	
076	96152	Seal, [CD4E] (Axle) (2WD Both Axles) (AWD Case Side Only*) 1994-02	1-2	E6DZ-1177-A
076	96153	Seal, [CD4E] (Axle) (Viton) (2WD Both Axles) (AWD Case Side Only*) 2003-Up	1-2	2F1Z-1177-AA
076	73153	Seal, [CD4E] (Axle) (Right) (AWD Adapter, Bell Housing Side)	1	YL8Z-1S177-AA
		FRICTION CLUTCH		
106	73102	Friction, [CD4E] (Direct Clutch) (.065”) (24 Teeth) (5.268”OD) 1994-95	3-4	F4RZ-7B164-D
106	73102A	Friction, [CD4E] (Direct Clutch) (.065”) (24 Teeth) (5.268”OD) (Hi-Energy) 1996-Up	3-4	F6RZ-7B164-A
108	73100	Friction, [CD4E] (Forward Clutch) (.065”) (32 Teeth) (5.272”OD) 1994-00	3	F3RZ-7B164-B
108	73100A	Friction, [CD4E] (Forward Clutch) (.065”) (32 Teeth) (5.272”OD) (Hi-Energy) 2001-Up	3	
110	73106	Friction, [CD4E] (Reverse Clutch) (.065”) (6.065”OD) 1994-Up	2	F3RZ-7B164-A
112	73108	Friction, [CD4E] (Coast Clutch) (.065”) (24 Teeth) (4.830”OD) 1994-96	2	F3RZ-7B164-E
112	73108A	Friction, [CD4E] (Coast Clutch) (.065”) (24 Teeth) (4.830”OD) (Hi-Energy) 1997-Up	2	F7RZ-7B164-AA
114	73104	Friction, [CD4E] (Low / Reverse Clutch) (.065”) (32 Teeth) (8-5/8”OD) 1994-00	3-4	F3RZ-7B164-C
114	73104A	Friction, [CD4E] (Low / Reverse Clutch) (.065”) (32 Teeth) (8-5/8”OD) (Hi-Energy) 01-Up	3-4	
	K73100	Friction Module, [CD4E] 1994-Up	1	
	K73100A	Friction Module, [CD4E] (With Hi-Energy Frictions)	1	
		STEEL CLUTCH		
126	73103	Steel, [CD4E] (Direct Clutch) (.079”) (32 Teeth) (4.114”ID) 1994-Up	3-4	F3RZ-7B442-E
126	73103A	Steel, [CD4E] (Direct Clutch) (.118”) (32 Teeth) (4.114”ID) 1995-96	3-4	F5RZ-7B442-A
128	73101	Steel, [CD4E] (Forward Clutch) (.069”) (32 Teeth) (4.260”ID)	2-3	F3RZ-7B442-C
130	73107	Steel, [CD4E] (Reverse Clutch) (.069”) (32 Teeth) (4.750”ID)	2	F3RZ-7B442-A
132	73109	Steel, [CD4E] (Coast Clutch) (.069”) (20 Teeth) (3.776”ID)	2	F3RZ-7B442-D
134	73105	Steel, [CD4E] (Low / Reverse Clutch) (.069”) (18 Teeth) (7.800”ID)	3-4	F3RZ-7B442-B
		CLUTCH PRESSURE PLATES		
146	73133	Pressure Plate, [CD4E] (Direct Clutch With Hump) (.155” Thick *Less Hump)	1	F3RZ-7B477-A
148	73130	Pressure Plate, [CD4E] (Forward Clutch) (.158”) (Flat) (4.265”ID)	1	F3RZ-7B066-BA
148	73130A	Pressure Plate, [CD4E] (Forward Clutch With Hump) (.158”) (4.265”ID)	1	
150	73131	Pressure Plate, [CD4E] (Reverse Clutch) (.156”)	1	F3RZ-7D408-A
152	73132	Pressure Plate, [CD4E] (Coast Clutch) (.358”) 1994-97	1	F3RZ-7B066-C
152	73132A	Pressure Plate, [CD4E] (Coast Clutch) (.188”) 1998-Up	1	F8RZ-7B066-AA
154	73420	Pressure Plate, [CD4E] (Low / Reverse Clutch) (.083”)	1	F3RZ-7B066-D
154	73420A	Pressure Plate, [CD4E] (Low / Reverse Clutch) (.090”)	1	F3RZ-7B066-E
154	73420B	Pressure Plate, [CD4E] (Low / Reverse Clutch) (.099”)	1	F3RZ-7B066-F
154	73420C	Pressure Plate, [CD4E] (Low / Reverse Clutch) (.106”)	1	
		VALVE BODY KITS		
	K73908JR	Shift Kit, [CD4E] (Junior) 1994-99	1	ATSG
	K73908S	Valve Body Kit, [CD4E]	1	Superior
		OIL SEALING RINGS		
	K73902	Ring Kit, [CD4E]	1	
177	73304	Ring, [CD4E] (Forward / Direct Clutch Hub) (Solid) (Teflon)	1	F3RZ-7C099-A

CD4E (FORD)/LA4A-EL (MAZDA)

178	73303	Ring, [CD4E] (Pump Stator to Turbine Shaft) (Teflon)	1	F3RP-7H115-BA
179	73301	Ring, [CD4E] (Reverse Clutch Cylinder) (Scarf Cut) (Teflon)	2	F3RZ-7D020-A
181	73302	Ring, [CD4E] (Pump Stator to Forward / Direct & Reverse Drum) (Teflon)	6	F3RZ-7H114-FA
		WASHERS & BEARINGS		
	K73907	Washer Kit, [CD4E] (5-Plastic)	1	
	K73907A	Bearing Kit, [CD4E]	1	
211	73450	Bearing, [CD4E] (Stator to Reverse Hub)	1	F3RZ-7H241-A
231	73422	Washer, [CD4E] (Forward & Direct Drum to Reverse Drum) (Plastic) (4-Tab)	1	F3RZ-7G116-A
231	73422HD	Washer, [CD4E] (Forward & Direct Drum to Reverse Drum) (Plastic) (4-Tab) (Heavy Duty)	1	
232	73452	Bearing, [CD4E] (Forward Sun Gear to Forward / Direct Drum)	1	F3RZ-7H026A
235	73454	Bearing, [CD4E] (Forward Planet to Sun Gear)	1	F3RZ-7H027A
238	73456	Bearing, [CD4E] (Forward Ring Gear to Forward Planet)	1	F3RZ-7H028A
241	73458	Bearing, [CD4E] (Reverse / Overdrive Shell to Forward Ring Gear)	1	F3RZ-7G178A
251	73460	Bearing, [CD4E] (Drive Sprocket to Reverse Planet)	1	F3RZ-7F240A
251	73251-01K	Shim Kit, [CD4E] (Planet-to-Drum and Differential End Play) (Bearing Shims)	1	Sonnax
262	73406A	Shim, [CD4E] (Driven Sprocket to Case) (.050”)	1	F3RZ-7H086F
262	73406B	Shim, [CD4E] (Driven Sprocket to Case) (.057”)	1	F3RZ-7H086E
262	73406C	Shim, [CD4E] (Driven Sprocket to Case) (.064”)	1	F3RZ-7H086D
262	73406D	Shim, [CD4E] (Driven Sprocket to Case) (.071”)	1	F3RZ-7H086C
262	73406E	Shim, [CD4E] (Driven Sprocket to Case) (.078”)	1	F3RZ-7H086B
262	73406F	Shim, [CD4E] (Driven Sprocket to Case) (.085”)	1	F3RZ-7H086A
263	73462	Bearing, [CD4E] (Driven Sprocket to Case)	1	F3RZ-7G247-A
264	73462A	Caged Roller Bearing, [CD4E] (Case to Driven Sprocket Support) (Presses Into Case)	1	F3RZ-7G355-A
279	73401A	Washer, [CD4E] (Drive Sprocket to Bell Housing) (.058”) (Blue)	1	F3RZ-7G099A
279	73401B	Washer, [CD4E] (Drive Sprocket to Bell Housing) (.068”) (Black)	1	F3RZ-7G099B
279	73401C	Washer, [CD4E] (Drive Sprocket to Bell Housing) (.078”) (Gray)	1	F3RZ-7G099C
279	73401D	Washer, [CD4E] (Drive Sprocket to Bell Housing) (.088”) (Green)	1	F3RZ-7G099D
281	73403	Bearing, [CD4E] (Differential to Driven Sprocket)	1	F3RZ-7G233A
292	73464	Bearing, [CD4E] (Differential to Bell Housing)	1	F3RZ-4221A
293	73407A	Race, [CD4E] (Differential to Bearing) (.041”)	1	F3RZ-4067-A
293	73407B	Race, [CD4E] (Differential to Bearing) (.052”)	1	F3RZ-4067-B
293	73407C	Race, [CD4E] (Differential to Bearing) (.064”)	1	F3RZ-4067-C
293	73407D	Race, [CD4E] (Differential to Bearing) (.076”)	1	F3RZ-4067-D
293	73407E	Race, [CD4E] (Differential to Bearing) (.087”)	1	F3RZ-4067-E
298	73457	Bearing, [CD4E] (Drive Sprocket) (Front) (Inner)	1	F3RZ-7H032A
298	73457A	Bearing, [CD4E] (Drive Sprocket) (Rear) (Inner)	1	F3RZ-7H029A
		GASKETS & RUBBER COMPONENTS		
301	73500	Gasket, [CD4E] (Side Cover) (Valve Body Cover) (Cork)	1	F3RZ-7F396A
301	73500A	Gasket, [CD4E] (Side Cover) (Valve Body Cover) (Molded Rubber) 2003-Up	1	
301	73500D	Gasket, [CD4E] (Side Cover) (Valve Body Cover) (Duraprene)	1	F3RZ-7F396A
310	73502	Gasket, [CD4E] (Pump Seperator Plate) 1994-96	1	F3RZ-7G331-A
310	73502A	Gasket, [CD4E] (Pump Seperator Plate) (White Stripe) 1997-Up	1	F7RZ-7G331-AA
311	73503	Lathe Cut Seal, [CD4E] (Pump Body)	1	F3RZ-7A248-A
318	73508	Gasket, [CD4E] (Case to Bell Housing)	1	F3RZ-7B353-A
320	73540	Gasket, [CD4E] (Accumulator Body Cover)	2	F3RZ-7F202A
321	73501	Gasket, [CD4E] (Valve Body Lower Seperator Plate) (Takes 2)	2	
322	73504	Gasket, [CD4E] (Pressure Tap Plate)	1	F3RZ-7H251-A
328	73507	Gasket, [CD4E] (Solenoid Body to Case)	1	F3RZ-7H200-A

CD4E (FORD)/LA4A-EL (MAZDA)

334	73538	Lip Seal, [CD4E] (Forward Clutch Piston) (Inner) (D-Ring)	1	F3RZ-7A548-C
335	73531	Lip Seal, [CD4E] (Forward Clutch Piston) (Outer)	1	F3RZ-7A548-A
336	73533	Lip Seal, [CD4E] (Direct Clutch Piston) (Inner)	1	F3RZ-7F225-A
337	73532	Lip Seal, [CD4E] (Direct Clutch Piston) (Outer)	1	F3RZ-7A548-B
338	73535	Seal, [CD4E] (Low / Reverse Clutch) (Inner)	1	F3RZ-7D404-A
339	73534	Seal, [CD4E] (Low / Reverse Clutch) (Outer)	1	F3RZ-7D403-A
347	73514	O-Ring, [CD4E] (Case Connector)	1	F3RZ-7B329-A
	73513	O-Ring, [CD4E] (2-4 Accumulator Cover)	1	
369	73512	O-Ring, [CD4E] (Vehicle Speed Sensor)	1	N806913-S
370	73539	O-Ring, [CD4E] (Turbine Speed Sensor)	1	F1DZ-7Z101-A
371	3292	Seal, [CD4E] (Filler Tube)	1	E2FZ-7N243-A
379	73517	Seal, [CD4E] (Filter)	1	F3RP-7Z302-A
	73558	Seal, [CD4E] (Final Drive Lube Tube)	1	F3RZ-7H205-A
384	73517A	Seal, [CD4E] (Filter to Valve Body) (Exhaust Regulator)	1	F3RZ-7H249-A
		TECHNICAL MANUALS		
	TMCD4E	Technical Manual, [CD4E]	1	ATSG
		ELECTRICAL COMPONENTS		
410	73957	Switch, [CD4E] (Manual Lever Position) 1994-Up	1	F3RZ-7F293-A
420	73949A	Solenoid Assembly, [CD4E] (All) 1994-Up	1	F6RZ-7G391-AA
436	73955	Sensor, [CD4E] (VSS) (Vehicle Speed Sensor) (2.0L) 2/1995-Up	1	F5RZ-9E731-AC
436	73955A	Sensor, [CD4E] (VSS) (Vehicle Speed Sensor) (2.5L) 2/1995-Up	1	F5RZ-9E731-BA
436	73955B	Sensor, [CD4E] (VSS) (Vehicle Speed Sensor) (Probe-1994-07), (Mazda 626-1994-02) (2-Prong Connector is made onto Plastic Speed-O Housing) (23 Teeth Driven Speed-O Gear)	1	F42Z-9E731-AA
436	73955BA	Sensor, [CD4E] (VSS) (Vehicle Speed Sensor) (2-Prong Connector Is Made onto Aluminum Speed-O Housing) (20 Teeth Driven Speed-O Gear) 1994-Up	1	
436	73955D	Sensor, [CD4E] (VSS) (Vehicle Speed Sensor) (3-Prong With Wire Harness & Screws Into Speed-O Housing) (2.5L) (V6) 1994-1/1995	1	
436	73955C	Sensor, [CD4E] (Output Speed Sensor) 1998-Up	1	6L8Z-7H103-AA
438	73959A	Sensor, [CD4E] (Turbine Speed Sensor) (With Green Connector) (Probe-1994-97) (Green Bracket With Enclosed Pick-Up)	1	E7RZ-7M101-KA
438	73959B	Sensor, [CD4E] (Turbine Speed Sensor) (With Black Connector) (With Enclosed Pick-Up) 1994-Up	1	F7RZ-7M101-AA
		HARD PARTS		
500	73912	Pump , [CD4E] 1994-96	1	
500	73912A	Pump, [CD4E] 1997-Up	1	F7RZ-7A103-AA
510	73426	Pump Body W/Gears, [CD4E] 1994-96	1	
510	73426A	Pump Body W/Gears, [CD4E] (*Use Only With Late Stator) 1997-Up	1	
520	73424	Stator, [CD4E] (Pump Cover) 1994-96	1	F3RZ-7A108-A
520	73424A	Stator, [CD4E] (Pump Cover) 1997-Up	1	
529	73865	Converter Reactor, [CD4E] (32 Spline)	1	
530	K73201	Pump Gears, [CD4E] (Standard OE Size) 1997-Up	1	
543	73408	Insert, [CD4E] (Oil Pump Drive Gear)	1	E1FZ-7F402-A
544	73202	Plate, [CD4E] (Pump) 1994-96	1	
544	73202A	Plate, [CD4E] (Pump) 1997-Up (*Retros to 1994 if Used With Late Pump Gasket # 73502A)	1	F7RZ-7A142-AA
554	73754A	Drum, [CD4E] (Forward / Direct) (3-Direct Steels .118” Thick) (Forward Return Spring Is Multi-Spring) (4 Cyl) 1994-E98	1	F5RZ-7G120-A
554	73754	Drum, [CD4E] (Forward / Direct) (4-Direct Steels .079” Thick) (Forward Return Spring Is Multi-Spring) (6 Cyl) 1994-E98	1	F5RZ-7G120-BB

CD4E (FORD)/LA4A-EL (MAZDA)

554	73754B	Drum, [CD4E] (Forward / Direct) (3-Direct Steels .079" Thick) (Forward Return Spring Is Multi-Spring) (4 Cyl) 1994-E98	1	F7RZ-7G120-AC
554	73754D	Drum, [CD4E] (Forward / Direct) (3-Direct Steels .118" Thick) (Forward Return Spring Is 1-Coil Spring) (4 Cyl) L1998-Up	1	F8RZ-7G120-AA
554	73754C	Drum, [CD4E] (Forward/Direct) (4-Direct Steels .079" Thick) (Forward Return Spring Is 1-Coil Spring) (6 Cyl) (*With Vertical Mark on Direct Splines) L1998-Up	1	F8RZ-7G120-BA
556	73300	Drum, [CD4E] (Reverse) (2 Clutch)	1	F3RZ-7D044-AA
556	73300-01	Sleeve, [CD4E] (Reverse Drum) **(*Drum Must Be Machined)**	1	Sonnax
564	K73941A	Piston Kit, [CD4E] (Forward / Coast Clutch) 1998-Up (With Coil Spring) (Cast # RFF8)	1	
565	K73940	Piston Kit, [CD4E] (Direct Clutch)	1	
566	K73939	Piston Kit, [CD4E] (Reverse Clutch)	1	
567	K73938	Piston Kit, [CD4E] (Low / Reverse Clutch)	1	
576	73417	Clutch Hub, [CD4E] (Reverse Clutch)	1	F3RZ-7D391-A
579	73838	Clutch Hub, [CD4E] (Coast Clutch) (.592")	1	
579	73838A	Clutch Hub, [CD4E] (Coast Clutch) (.640")	1	
582	73747	Planet, [CD4E] (Forward) (Low / Intermediate) (3 Gear) (*Can Use 73747A)	1	F8RZ-7A398-AA
582	73747A	Planet, [CD4E] (Forward) (Low / Intermediate) (4 Gear) (*Can Use 73747)	1	
584	73413	Planet, [CD4E] (Reverse) (4 Gear) (With Low Reverse Clutch Hub) 1994-Up (*Can Use 73413A)	1	
584	73413A	Planet, [CD4E] (Reverse) (3 Gear) (With Low Reverse Clutch Hub) 1994-Up (*Retros 4 Gear)	1	F3RZ-7D006-A
592	73748	Ring Gear, [CD4E] (Forward Planet) (Low / Intermediate)	1	F3RZ-7A153-C
598	73821	Ring Gear, [CD4E] (Differential Planet) (74 Teeth)	1	F4RZ-7F343-A
598	73821A	Ring Gear, [CD4E] (Differential Planet) (86 Teeth)	1	F3RZ-7F343-A
612	73749A	Sun Gear, [CD4E] (Forward With Inner Race) (*Use K73749A)	1	
622	73746	Shell, [CD4E] (With Reverse Sun Gear) 1994-Up (58 Teeth)	1	F3RZ-7A626-A
624	73423	Shell, [CD4E] (Direct With Hub)	1	F4RZ-7D064-A
		SPRAGS & ONE WAY CLUTCHES		
642	K73727	Sprag Assembly, [CD4E] (Low Sprag With Outer & Inner Races)	1	F3RZ-7A089-B
642	K73727MD	Mechanical Diode, [CD4E] (Low With Outer & Inner Races)	1	
646	K73749	Sprag Assembly, [CD4E] (Forward Sprag With Sun Gear) 1994-97 (.593" Wide Elements)	1	F3RZ-7A089-A
646	K73749A	Sprag Assembly, [CD4E] (Forward Sprag With Sun Gear) 1998-Up (.543" Wide Elements)	1	F8RZ-7A089-AA
652	73727	Sprag, [CD4E] (Low Sprag With Out Outer & Inner Races)	1	
656	73725	Sprag, [CD4E] (Forward) (.593" Wide Elements) 1994-97	1	
656	73725A	Sprag, [CD4E] (Forward) (.543" Wide Elements) 1998-Up	1	
667	73921	Outer Race, [CD4E] (Forward Sprag) (.693") 1994-98	1	
667	73921A	Outer Race, [CD4E] (Forward Sprag) (.616") 1998-Up	1	
		HARD PARTS (Continued)		
671	73409	Shaft, [CD4E] (Pump Drive) (14-1/16" Long) (2.0L & 3.0L)	1	F4RZ-7B328-C
671	73409A	Shaft, [CD4E] (Pump Drive) (14-3/4" Long) (2.5L)	1	F4RZ-7B328-B
673	73411	Shaft, [CD4E] (Turbine) (8-1/8" Long) (2.0L & 3.0L)	1	F3RZ-7F213-A
673	73411A	Shaft, [CD4E] (Turbine) (8-7/8" Long) (2.5L)	1	F4RZ-7F213-A
694	73810	Plate, [CD4E] (Sprag Thrust)	1	F3RZ-7B066-B
700	78320B	Chain, [CD4E] (45-Links, 3/4" Wide) (Mystique / Contour) (2.0L) (4 Cyl) 1994-Up	1	HV043
700	73820	Chain, [CD4E] (46-Links, 3/4" Wide) [626 / Probe (2.0L) (4 Cyl) 1994-Up] & [Mystique / Contour (2.5L) 2000-Up]	1	HV045
700	78320A	Chain, [CD4E] (46 Links, 1" Wide) (Mystique / Contour) (2.5L) (V6) 1994-99	1	HV044
701	73704	Cover, [CD4E] (Chain) (Rear)	1	

CD4E (FORD)/LA4A-EL (MAZDA)

702	73705	Cover, [CD4E] (Chain) (Front) (3-1/16" Tall Between Clips)	1	
702	73705A	Cover, [CD4E] (Chain) (Front) (1-1/2" Tall Between Clips)	1	
705	73853	Sprocket, [CD4E] (Drive) (55 Teeth) (.604" Thick) (Reverse Planet Ring Gear)	1	
705	73853C	Sprocket, [CD4E] (Drive) (56 Teeth) (1.100" Thick) (Reverse Planet Ring Gear)	1	
705	73853A	Sprocket, [CD4E] (Drive) (55 Teeth) (.850" Thick) (Reverse Planet Ring Gear)	1	
705	73853B	Sprocket, [CD4E] (Drive) (55 Teeth) (.615" Thick) (Reverse Planet Ring Gear)	1	
706	73852E	Sprocket, [CD4E] (Driven) (50 Teeth) (.644" Thick Teeth) (1.970"OD) (26 Teeth Sun Gear)	1	
706	73852	Sprocket, [CD4E] (Driven) (52 Teeth) (.615" Thick Teeth) (1.970"OD) (26 Teeth Sun Gear)	1	
706	73852D	Sprocket, [CD4E] (Driven) (54 Teeth) (.654" Thick Teeth) (1.730"OD) (26 Teeth Sun Gear)	1	
706	73852B	Sprocket, [CD4E] (Driven) (54 Teeth) (.615" Thick Teeth) (1.970"OD) (26 Teeth Sun Gear)	1	
706	73852EA	Sprocket, [CD4E] (Driven) (50 Teeth) (.644" Thick Teeth) (1.730"OD) (26 Teeth Sun Gear)	1	
706	73852DA	Sprocket, [CD4E] (Driven) (54 Teeth) (.654" Thick Teeth) (1.970"OD) (26 Teeth Sun Gear)	1	
706	73852F	Sprocket, [CD4E] (Driven) (46 Teeth) (1.150" Thick Teeth) (1.730"OD) (26 Teeth Sun Gear)	1	
706	73852C	Sprocket, [CD4E] (Driven) (54 Teeth) (.895" Thick Teeth) (1.965"OD) (26 Teeth Sun Gear)	1	
706	73852G	Sprocket, [CD4E] (Driven) (50 Teeth) (.900" Thick Teeth) (1.965"OD) (26 Teeth Sun Gear)	1	
706	73852H	Sprocket, [CD4E] (Driven) (50 Teeth) (1.140" Thick Teeth) (26 Teeth Sun Gear)	1	
706	73852I	Sprocket, [CD4E] (Driven) (55 Teeth) (.900" Thick Teeth) (1.730"OD) (26 Teeth Sun Gear)	1	
706	73852A	Sprocket, [CD4E] (Driven) (54 Teeth) (.644" Thick Teeth) (1.730"OD) (30 Teeth Sun Gear)	1	
715	73822A	Differential, [CD4E] (26 Teeth Sun Gear) (24 Teeth Pinion Gears) (Smooth on Neck Where #64 Bushing Rides)	1	
715	73822	Differential, [CD4E] (26 Teeth Sun Gear) (30 Teeth Pinion Gears) (Smooth on Neck Where #64 Bushing Rides)	1	
715	73822C	Differential, [CD4E] (26 Teeth Sun Gear) (24 Teeth Pinion Gears) (External Splines on Neck, Bell Housing Side)	1	
715	73822B	Differential, [CD4E] (26 Teeth Sun Gear) (30 Teeth Pinion Gears) (External Splines on Neck, Bell Housing Side)	1	
		VALVE BODIES (REBUILT)		
740	MF-6301	Valve Body, [CD4E] (With Casting # F3) 1994-96	1	
740	MF-6302	Valve Body, [CD4E] (With Casting # F7) 1997-Up	1	
		VALVE BODIES		
740	73841	Valve Body, [CD4E] (With Solenoid Pack) (Cast # RFF3) 1994-96	1	
740	73841A	Valve Body, [CD4E] (With Solenoid Pack) (Cast # RFF7) 1997-Up	1	
		VALVE BODY COMPONENTS		
741	73840MK	Master Repair Kit, [CD4E]	1	Sonnax
741	73840-BK	By Pass Kit, [CD4E]	1	Sonnax
741	73840-RK	Regulator Kit, [CD4E]	1	Sonnax
	73840MTL	Master Tool Kit, [CD4E]	1	Sonnax
	73840-TL	Reamer Kit, [CD4E] (Pressure Regulator Valve) (Reamer, Drill Jig & Guide Pin) **(*Use With VB-FIX)**	1	Sonnax
		HARD PARTS (Continued)		
750	73381	Bell Housing, [CD4E] (Starter at 11:00) (Top Bolts 5-1/8")	1	
750	73381A	Bell Housing, [CD4E] (Starter at 11:00) (Top Bolts 6-1/2")	1	
750	73381B	Bell Housing, [CD4E] (Starter at 11:00) (Top Bolts 3-1/2")	1	
750	73381C	Bell Housing, [CD4E] (Starter at 11:00) (Top Bolts 3-1/2") (AWD) (Has 4-Raised Threaded Bosses by the Seal) (Cast # RFYL8P-7976-CA) (Axle Seal is 2.755"OD)	1	

CD4E (FORD)/LA4A-EL (MAZDA)

750	73381D	Bell Housing, [CD4E] (Starter at 11:00) (Top Bolts 3-1/2") (2WD) (Has 4-Non-Threaded Bosses by the Seal) (Cast # RFYL8P-7976-CA) (No Speed-O Hole) (Seal is 2.515"OD)	1	
750	73381E	Bell Housing, [CD4E] (Square Starter Hole at 2:00) (Top Bolts 5-3/8") (AWD) (Has 4-Raised Bosses by Axle Seal, 3-Threaded) (Cast # RF5L8P-7976-AA) (Seal is 2.515"OD)	1	
750	73381F	Bell Housing, [CD4E] (Square Starter Hole at 2:00) (Top Bolts 5-3/8") (AWD) (Has 4-Raised Bosses Axle Seal, 3-Threaded) (Cast # RF5L8P7976-AA) (Axle Seal is 2.755"OD)	1	
760	73872	Case, [CD4E] (No Sensor) 1994-98	1	
760	73872A	Case, [CD4E] (With Sensor) 1998-Up	1	
760	73872B	Case, [CD4E] (With Sensor) (AWD)	1	
		CASE COMPONENTS		
	73947	Valve, [CD4E] (Thermostatic Oil Level Control)	1	
	VB-FIX	Servo Pin Bore Reaming Fixture, [CD4E]	1	Sonnax
		HARD PARTS (Continued)		
766	73834	Pan, [CD4E] (Side) (Vent Is Metal With Cap)	1	F4RZ-7G004-A
766	73834A	Pan, [CD4E] (Side) (Vent Is Just a Tube) (With Raised Humps Around Each Bolt)	1	F7RZ-7G004-AA
766	73834B	Pan, [CD4E] (Side) (Vent Is Just a Tube) **(*Pan Flat at Bolt Holes For a Reusable Pan Gasket)**	1	
847	73857	Gear, [CD4E] (Drive Speed-O) (27 Teeth) (Differential)	1	F3RZ-17285-A
848	73859	Gear, [CD4E] (Driven Speed-O) (23 Teeth) (Slides Off of Speed-O Housing)	1	F5RZ-17271-D
848	73859A	Gear, [CD4E] (Driven Speed-O) (23 Teeth) (Snap Ring Holds Gear to Housing)	1	
	73922	Waved Cushion, [CD4E] (Forward Clutch) 1998-Up	1	F8RZ-7E085-AA
857	73931	Cushion, [CD4E] (Low / Reverse Clutch)	1	F3RZ-7B070-A
	N-61	Converter Nut, (Metric)	4	
	K73928	Snap Ring Kit, [CD4E] 1994-Up	1	
876	73600	Snap Ring, [CD4E] (Holds Forward Pressure Plate In) (.052") 1994-97	1	F3DZ-7D483-E
876	73600A	Snap Ring, [CD4E] (Holds Forward Pressure Plate In) (.057") 1994-97	1	F3DZ-7D483-F
876	73600B	Snap Ring, [CD4E] (Holds Forward Pressure Plate In) (.062") 1994-97	1	F3DZ-7D483-G
876	73600C	Snap Ring, [CD4E] (Holds Forward Pressure Plate In) (.069") 1994-97	1	F3DZ-7D483-H
876	73600D	Snap Ring, [CD4E] (Holds Forward Pressure Plate In) (.058") 1998-Up	1	F8RZ-7D483-AA
876	76300E	Snap Ring, [CD4E] (Holds Forward Pressure Plate In) (.065") 1998-Up	1	F8RZ-7D483-BA
876	73600F	Snap Ring, [CD4E] (Holds Forward Pressure Plate In) (.071") 1998-Up	1	F8RZ-7D483-CA
876	73600G	Snap Ring, [CD4E] (Holds Forward Pressure Plate In) (.078") 1998-Up	1	F8RZ-7D483-DA
877	73623	Snap Ring, [CD4E] (Holds Forward Clutch Retainer In)	1	F3RZ-7N169-A
878	73600	Snap Ring, [CD4E] (Holds Direct Clutch Pressure Plate In) (.052")	1	F3RZ-7D483-E
878	73600A	Snap Ring, [CD4E] (Holds Direct Clutch Pressure Plate In) (.057")	1	F3RZ-7D483-F
878	73600B	Snap Ring, [CD4E] (Holds Direct Clutch Pressure Plate In) (.062")	1	F3RZ-7D483-G
878	73600C	Snap Ring, [CD4E] (Holds Direct Clutch Pressure Plate In) (.069")	1	F3RZ-7D483-H
879	73605	Snap Ring, [CD4E] (Holds Direct Clutch Retainer In)	1	F3RZ-7C122-A
881	73607	Snap Ring, [CD4E] (Holds Reverse Hub to Forward / Direct Drum) (.033")	1	
883	73609	Snap Ring, [CD4E] (Holds Low Sprag In Case)	1	F3RZ-7D483-A
885	73611	Snap Ring, [CD4E] (Holds Low / Reverse Clutch Retainer In)	1	F3RZ-7D483-J
887	73613	Snap Ring, [CD4E] (Holds Coast Clutch Hub to Sun Gear)	1	F3RZ-7C122-B
888	73615	Snap Ring, [CD4E] (Holds Retainer to Sun Gear)	1	
892	73602	Snap Ring, [CD4E] (Holds Reverse Clutch Pressure Plate In) (.059")	1	F3RZ-7D483-B
892	73602A	Snap Ring, [CD4E] (Holds Reverse Clutch Pressure Plate In) (.064")	1	F3RZ-7D483-C
892	73602B	Snap Ring, [CD4E] (Holds Reverse Clutch Pressure Plate In) (.070")	1	F3RZ-7D483-D
893	73617	Snap Ring, [CD4E] (Holds Reverse Clutch Retainer In Drum)	1	F3RZ-7H225-A

CD4E (FORD)/LA4A-EL (MAZDA)

896	73619	Snap Ring, [CD4E] (Holds Overdrive Servo Cover In)	1	XS7Z-7H074-AA
899	73621	Snap Ring, [CD4E] (Holds Differential Ring Gear In Bell Housing)	1	F3RZ-7H106-A
900	K73528	Servo Assembly, [CD4E] (Overdrive) (No Groove Pin) 1994-96	1	
900	K73528A	Servo Assembly, [CD4E] (Overdrive) (1-Groove Pin) 1994-96	1	
900	K73528B	Servo Assembly, [CD4E] (Overdrive) (2-Grooves Pin) 1994-96	1	
900	K73528D	Servo Assembly, [CD4E] (Overdrive) (1-Groove PIn) (Cast # F7RP) 1997-Up	1	
901	73708	Spring, [CD4E] (Overdrive Servo)	1	F3RZ-7H073-A
903	73528	Pin W/Piston & Spring, [CD4E] (Overdrive Servo) (No Groove) (1st Design) 1994-Up (*Except 1997-98)	1	
903	73528A	Pin W/Piston & Spring, [CD4E] (Overdrive Servo) (1-Groove) (1st Design) 1994-Up (*Except 1997-98)	1	
903	73528B	Pin W/Piston & Spring, [CD4E] (Overdrive Servo) (2-Grooves) (1st Design) 1994-Up (*Except 1997-98)	1	
903	73528C	Pin W/Piston, [CD4E] (Overdrive Servo) (No Groove) (2nd Design) (No Spring Type) 1997-98	1	F4RZ-7H188-F
903	73528D	Pin W/Piston, [CD4E] (Overdrive Servo) (1-Groove) (2nd Design) (No Spring Type) 97-98	1	F4RZ-7H188-E
903	73528E	Pin W/Piston, [CD4E] (Overdrive Servo) (2-Grooves) (2nd Design) (No Spring Type) 1997-98	1	F4RZ-7H188-D
904	73340	Cover, [CD4E] (Overdrive Servo) (Bonded)	1	F4RZ-7D027-A
935	73840-24	Piston Kit, [CD4E] (2-4 Accumulator) (Contains: Piston With O-Rings, & Springs)	1	Sonnax
945	73840-LR	Piston Kit, [CD4E] (Low / Reverse Accumulator) (Contains: Piston With O-Rings, & Springs)	1	Sonnax
950	73840-FWD	Piston Kit, [CD4E] (Forward Accumulator) (Contains: Piston With O-Rings, & Springs)	1	Sonnax
960	K73760A	Piston Kit, [CD4E] (Bonded) 1994-97	1	
960	K73760B	Piston Kit, [CD4E] (Bonded) 1998-Up	1	
964	73941	Piston, [CD4E] (Forward Clutch) 1994-97	1	F3RZ-7A262-B
964	73941A	Piston, [CD4E] (Forward Clutch) (Cast # RFF8) 1998-Up (*.020”Taller than Early Piston)	1	F8RZ-7A262-AB
965	73940	Piston, [CD4E] (Direct Clutch) (Lip Seal Type)	1	F3RZ-7A262-A
966	73949	Piston, [CD4E] (Reverse Clutch) (Bonded)	1	F3RZ-7E079-A
967	73938	Piston, [CD4E] (Low/Reverse Clutch) (Lip Seal Type)	1	F3RZ-7D402-A
969	73937	Piston, [CD4E] (Coast Clutch) (Bonded) 1994-97	1	F3RZ-7A266-C
969	73937A	Piston, [CD4E] (Coast Clutch) (Bonded) (.090 Taller) 1998-Up	1	F8RZ-7A262-BA
974	73205	Retainer W/Spring, [CD4E] (Forward / Coast Clutch) (With Multiple Springs) 1994-97	1	F3RZ-7G299-A
974	73205A	Retainer W/Spring, [CD4E] (Forward / Coast Clutch) (With 1-Coil Spring) 1998-Up	1	F8RZ-7G299-AA
975	73207	Retainer W/Springs, [CD4E] (Direct Clutch)	1	F4RZ-7F235-A
976	73209	Retainer W/Springs, [CD4E] (Reverse Clutch)	1	F3RZ-7G335-A
977	73211	Retainer W/Springs, [CD4E] (Low / Reverse Clutch)	1	F3RZ-7H064-A
991	K73676	Linkage Assembly, [CD4E] (Internal) (Complete Linkage Assembly)	1	
992	73675A	Linkage, [CD4E] (External) (Shift Lever) (2-9/16” Long)	1	
992	73675B	Linkage, [CD4E] (External) (Shift Lever) (3-5/16” Long)	1	F7RZ-7A256-AA
996	73280	Fittings, [CD4E] (Cooler Line to Case) (Screw In Type)	2	
999	K73679	Oil Tube, [CD4E]	1	F3RZ-7H207-A

4F27E (FORD)/FN4A-EL (MAZDA) /FNR5

FWD 4 Speed

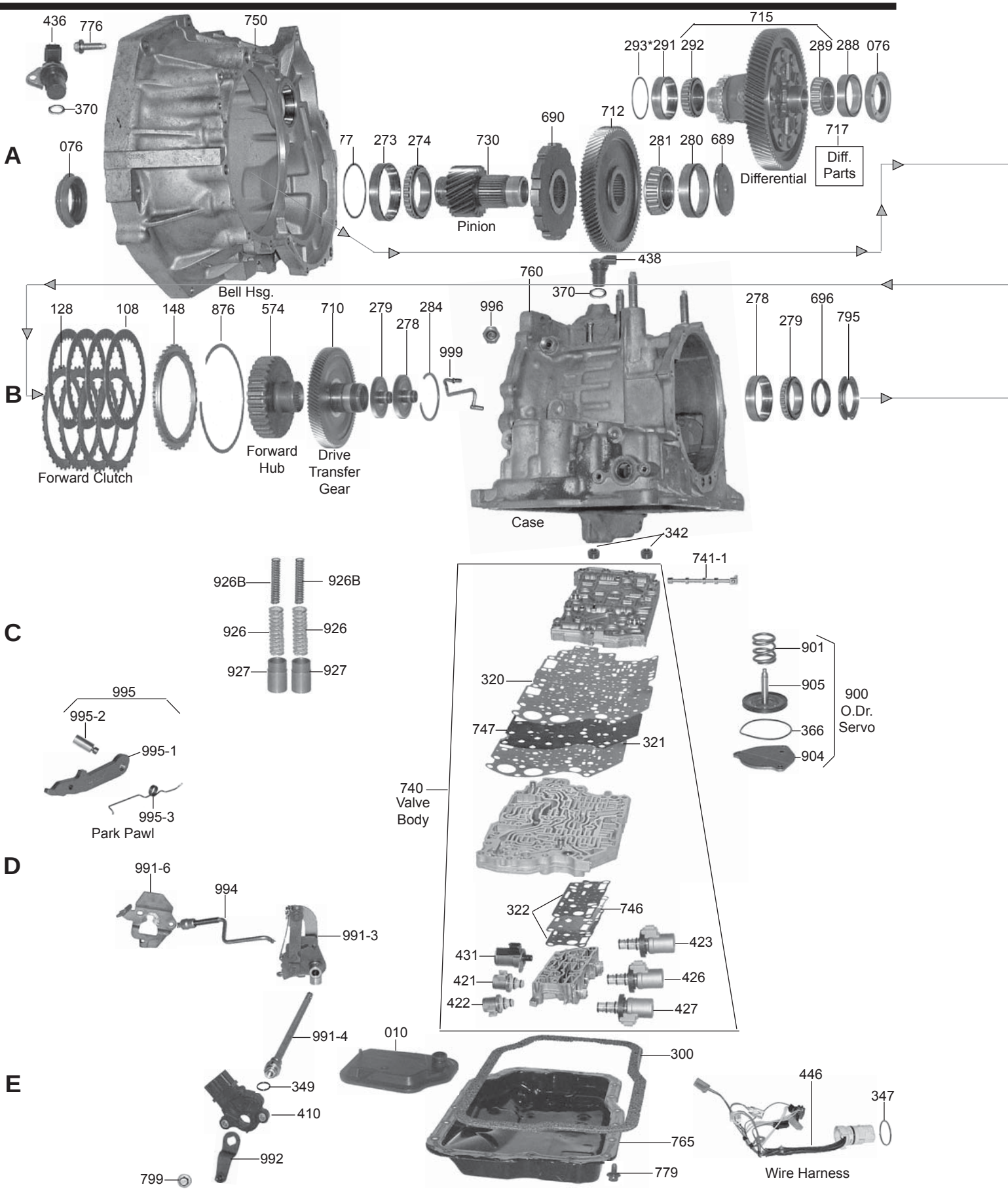

4F27E (FORD)/FN4A-EL (MAZDA)/FNR5

FWD 4 Speed

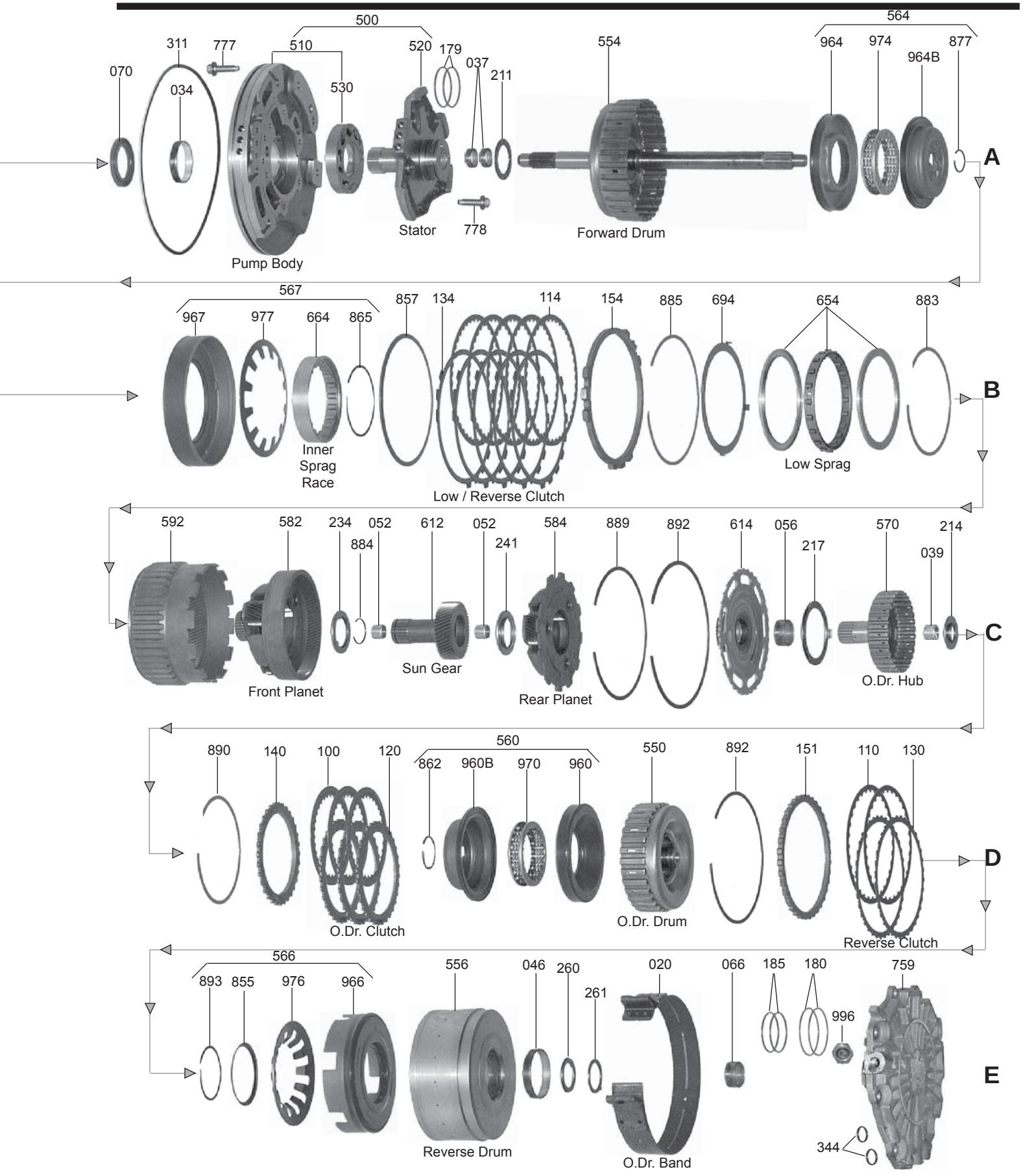

4F27E (FORD)/FN4A-EL (MAZDA)/FNR5

ILL#	PART#	DESCRIPTION	QTY	REF #
		OVERHAUL KITS		
	K46900P	Overhaul Kit, [FN4A-EL] (Mazda) (With Pistons) 1999-Up	1	
	K46900	Overhaul Kit, [FN4A-EL] (Mazda) (Without Pistons) 1999-Up	1	
	K46900AP	Overhaul Kit, [4F27E] (Ford) (With Pistons) 2000-Up	1	
	K46900A	Overhaul Kit, [4F27E] (Ford) (Without Pistons) 2000-Up	1	
	K46900C	Overhaul Kit, [FNR5] (Ford) & [FS5A-EL] (Mazda) (5 Speed) 2006-Up	1	
		MASTER L/STEEL KIT		
	DK4600P-S	Master L/Steels Kit, [FN4A-EL] (Mazda) (With Pistons) 1999-03	1	
	DK4600-S	Master L/Steels Kit, [FN4A-EL] (Mazda) (Without Pistons) 1999-03	1	
	DK4600AP-S	Master L/Steels Kit, [4F27E] (Ford) (With Pistons) 2000-Up	1	
	DK4600A-S	Master L/Steels Kit, [4F27E] (Ford) (Without Pistons) 2000-Up	1	
	DK4600BP-S	Master L/Steels Kit, [FN4A-EL] (Mazda) (With Pistons) 10/2002-Up	1	
	DK4600B-S	Master L/Steels Kit, [FN4A-EL] (Mazda) (Without Pistons) 10/2002-Up	1	
	DK4600C-S	Master L/Steels Kit, [FNR5] (Ford) & [FS5A-EL] (Mazda) (5 Speed) 2006-Up	1	
		MASTER W/STEEL KIT		
	DK4600P	Master W/Steels Kit, [FN4A-EL] (Mazda) (With Pistons) 1999-03	1	
	DK4600	Master W/Steels Kit, [FN4A-EL] (Mazda) (Without Pistons) 1999-03	1	
	DK4600AP	Master W/Steels Kit, [4F27E] (Ford) (With Pistons) 2000-Up	1	
	DK4600A	Master W/Steels Kit, [4F27E] (Ford) (Without Pistons) 2000-Up	1	
	DK4600BP	Master W/Steels Kit, [FN4A-EL] (Mazda) (With Pistons) 10/2002-Up	1	
	DK4600B	Master W/Steels Kit, [FN4A-EL] (Mazda) (Without Pistons) 10/2002-Up	1	
	DK4600C	Master W/Steels Kit, [FNR5] (Ford) & [FS5A-EL] (Mazda) (5 Speed) 2006-Up	1	
		FILTER		
010	46710	Filter, [4F27E] (Ford, Mazda) 1999-Up	1	XS4Z-7A098-AB
010	46710A	Filter, [FNR5 / FS5A-EL] (5 Speed) 2006-Up	1	
		FILTER KIT		
	FK46710	Filter Kit, [4F27E] (Ford, Mazda) 1999-Up	1	
	FK46710A	Filler Kit, [FNR5 / FS5A-EL] (5 Speed) 2006-Up	1	
		BANDS		
020	46700	Band, [4F27E / FNR5 / FS5A-EL] (Overdrive) (1-3/8" Wide) 1999-Up	1	XS4Z-7D034-AB
		BUSHINGS		
	K46901	Bushing Kit, [4F27E] 1999-Up	1	
	46000-01K	Bushing Set, [4F27E] (Stator) (Rear) (2-Bushings, 1-Inner, 1-Outer) 1999-Up	1	Sonnax
	K46901C	Bushing Kit, [FNR5 / FS5A-EL] (5 Speed) 2006-Up	1	
		METAL CLAD SEALS		
070	46151	Seal, [4F27E / FNR5 / FS5A-EL] (Front) 1999-Up	1	XS4Z-7A248-AA
076	91152	Seal, [4F27E / FNR5 / FS5A-EL] (Axle) (Both Sides) (Mazda) (.395" Thick) 1999-Up	2	F004-27-238
076	46152A	Seal, [4F27E] (Axle) (Both Sides) (Ford) 2000-Up	2	XS4Z-1177-AA
		FRICTION CLUTCH		
100	46103	Friction, [4F27E] (Direct) (3-4 Clutch) (.063") (2-Sided) (Waffle) 1999-Up	3	XS4Z-7B164-CB
100	46103A	Friction, [FN4A-EL / FNR5 / FS5A-EL] (Mazda) (Direct) (3-4 Clutch) (.099") (1-Sided Internal Spline) 10/2002-Up	3	FNE1-19-370

4F27E (FORD)/FN4A-EL (MAZDA)/FNR5

102	46103B	Friction, [FN4A-EL / FNR5 / FS5A-EL] (Mazda) (Direct) (3-4 Clutch) (.099") (1-Sided External Spline) 10/2002-Up	3	FNE1-19-33Y
102	46105	Friction, [FNR5] (Reduction Brake Clutch) (.071") (32 Teeth) (4.530"OD)	3	
106	46106	Friction, [FNR5] (Secondary Direct Clutch) (.071") (32 Teeth) (4.530"OD)	2	
108	46103	Friction, [4F27E / FNR5 / FS5A-EL] (Forward Clutch) (.063") (32 Teeth) (4.530"OD) (Waffle) 1999-Up	4	XS4Z-7B164-CB
110	46107	Friction, [4F27E / FNR5 / FS5A-EL] (Reverse Clutch) (.064") (32 Teeth) (5-1/2"OD) 99-Up	2	XS4Z-7B164-AB
114	46109	Friction, [4F27E] (Low / Reverse) (.063") (42 Teeth) (6-1/8"OD) 1999-Up	5	XS4Z-7B164-BB
	K46100A	Friction Module, [4F27E] (*All With 2-Sided Direct (3-4) Frictions) 1999-Up	1	
	K46100B	Friction Module, [FN4A-EL] (Mazda) (With 1-Side Frictions) 10/2002-Up	1	
	K46100C	Friction Module, [FNR5 / FS5A-EL] (5 Speed) 2006-Up	1	
		STEEL CLUTCH		
120	46112	Steel, [4F27E] (Direct) (3-4 Clutch) (.136") (32 Teeth) (3.715"ID) 1999-Up	3	XS4Z-7B442-DB
120	46111	Steel, [4F27E] (Direct) (3-4 Clutch) (.063") (32 Teeth) (3.715"ID) 1999-Up	3	
122	46115	Steel, [FNR5] (Reduction Brake Clutch) (.063" Thick) (30 Teeth)	5	
126	46111	Steel, [FNR5] (Secondary Direct Clutch) (.063" Thick) (32 Teeth)	3	
128	46111	Steel, [4F27E / FNR5 / FS5A-EL] (Forward Clutch) (.063") (32 Teeth) (3.715"ID) 1999-Up	4	XS4Z-7B442-CB
130	46114	Steel, [4F27E / FNR5 / FS5A-EL] (Reverse Clutch) (.063") (36 Teeth) (5.022"ID) 1999-Up	2	XS4Z-7B442-AB
130	46114A	Steel, [4F27E / FNR5 / FS5A-EL] (Reverse Clutch) (.082") (36 Teeth) (5.022"ID) 1999-Up	2	
134	46113	Steel, [4F27E / FNR5 / FS5A-EL] (Low / Reverse Clutch) (.063") (12 Teeth) (5.621"ID) 1999-Up	5	XS4Z-7B442-BB
	K46110	Steel Module, [4F27E / FN4A-EL] 1999-Up	1	
	K46110C	Steel Module, [5NR5 / FS5A-EL] (.082") (36 Teeth)	1	
		CLUTCH PRESSURE PLATES		
140	46131	Pressure Plate, [4F27E] (Direct) (3-4 Clutch) (*Also #148) (Stepped) (.116"/.230") (32 Teeth) (3.705"ID)	1	
142	46134C	Pressure Plate, [5NR5 / FS5A-EL] (Reduction Brake Clutch) (.138") (32 Teeth)	1	
146	46131C	Pressure Plate, [5NR5 / FS5A-EL] (Secondary Direct Clutch) (.119") (32.Teeth)	1	
148	46131	Pressure Plate, [4F27E / FNR5 / FS5A-EL] (Forward Clutch) (*Also #140) (Stepped) (.116"/.230") (32 Teeth) (3.705"ID)	1-2	XS4Z-7B066-CB
151	46133	Pressure Plate, [4F27E / FNR5 /FS5A-EL] (Reverse Clutch) (Top) (.228") (36 Teeth) (5.020"ID) 1999-Up	1	XS4Z-7B066-AB
154	46135	Pressure Plate, [4F27E / FNR5 / FS5A-EL] (Low / Reverse Clutch) (.241") (9 Teeth) (5.625"ID) 1999-Up	1	XS4Z-7B066-BB
		VALVE BODY KITS		
	K46908S	Valve Body Kit, [4F27E / 5NR5] 1999-Up	1	Superior
		OIL SEALING RINGS		
	K46903	Ring Kit, [4F27E / FN4A-EL] 1999-05	1	
	K46903C	Ring Kit, [5NR5 / FS5A-EL] (5 Speed) 2006-Up	1	
		WASHERS & BEARINGS		
	K46907	Washer Kit, [4F27E]	1	
211	46401	Washer, [4F27E] (Stator to Forward Drum) (.075" Thick) (1.860"OD) (Plastic) 1999-Up	1	XS4Z-7H042-AB
214	46421	Bearing W/Races, [4F27E / FNR5 / FS5A-EL] (Overdrive Hub to Drum) (1.533"OD) (.790"ID) 1999-Up	1	
217	46422	Bearing W/Races, [4F27E] (Rear Sun Gear to Hub) (.117" Thick) (2.900"OD) 1999-Up (*With 3-Raised Tabs)	1	
217	46423	Bearing W/Races, [4F27E / FNR5 / FS5A-EL] (Rear Sun Gear to Hub) (.117" Thick) (3.072"OD) (*With 4-Flat Tabs) 1999-Up	1	XS4Z-7C041-AB

4F27E (FORD)/FN4A-EL (MAZDA)/FNR5

228	46436C	Caged Needle Bearing, [FNR5 / FS5A-EL] (Direct Clutch Drum) (Inner) 2005-Up (Cast # NTN HK2512F) (.141" Thick) (1.820"OD)	1	
229	46437C	Bearing W/Races, [FNR5 / FS5A-EL] (Direct Clutch Drum to Case) (1.115"ID) (.088" Thick) (1.566"OD) 2006-Up	1	
234	46424	Bearing W/Races, [4F27E / FNR5 / FS5A-EL] (Front Planet to Sun Gear) (1.995"OD) (.145" Thick) 1999-Up	1	XS4Z-7H375-AB
241	46425	Bearing W/Races, [4F27E / FNR5 / FS5A-EL] (Front Sun Gear to Rear Planet) (2.035"OD) (1.340"ID) 1999-Up	1	XS4Z-7H337-AB
260	46426	Bearing W/Race, [4F27E] (Overdrive Drum to Rear Cover) (.100" Thick) (1.566"OD) (1.069"ID) 1999-Up	1	XS4Z-7D234-AC
260	46427	Bearing W/Race, [4F27E / FNR5 / FS5A-EL] (Overdrive Drum to Rear Cover) (.088" Thick) (1.566"OD) (1.089"ID) 1999-Up	1	
261	46427A	Race, [4F27E] (Overdrive Drum to Rear Cover) (1-Tab) **(*Specify Thickness)** (1.575"OD) (1.213"ID)	1	XS4Z-7G262-FB
261	46428C	Race, [FNR5 / FS5A-EL] (Overdrive Drum to Rear Cover) (1-Tab) **(*Specify Thickness)** (1.130"ID) (1.575"OD) 2006-Up	1	
273	46431A	Cup Race, [4F27E] (Pinion Bearing to Bell Housing & to Case) (2.440"OD) 1999-Up (Bearing # NP237427 Timken)	1-2	
273	46431C	Inner Race, [FNR5 / FS5A-EL] (Reduction Planet Shaft to Roller Bearing #274) (.900" Thick) (1.610"OD) (1.220"ID) (Cast # KOYO 06NU0623) 2006-Up	1	
274	46431B	Cone Bearing, [4F27E] (Pinion to Bell Housing & to Case) (Bearing # NP 986901 Timken) 1999-Up	1-2	
274	46431D	Roller Bearing, [FNR5 / FS5A-EL] (Pinion to Bell Housing) (15-Rollers) (.685" Thick) (2.445"OD) 2006-Up	1	
274	K46431	Bearing/Race Set, [4F27E] (Pinion to Bell Housing & to Case) 1999-Up (Bearing # NP 986901 Timken)	1	XS4Z-7H338-AB
277	46436A	Shim, [4F27E] (Pinion to Bell Housing) **(*Specify Thickness .019" to .051")** (2.405"OD)	1	XS4Z-7H367-AB
277	46429C	Shim, [FNR5 / FS5A-EL] (Pinion Gear to Park Gear) (.032" Thick) (2.393"OD) (2.095"ID) 2006-Up	1	
278	46432A	Cup Race, [4F27E] (Drive Gear) (2.680"OD) (Bearing # P900 / NP844242 Timken) 99-Up	1	
278	46432C	Cup Race W/Flange, [FNR5 / FS5A-EL] (Drive Transfer Gear) (Double Race With 6-Bolt Flange) 2006-Up	1	
279	46432B	Cone Bearing, [4F27E] (Drive Gear) (1.770"ID) (Bearing # P900 / NP724285 Timken) 1999-Up	1	
279	46432D	Cone Bearing, [FNR5 / FS5A-EL] (Drive Transfer Gear) (25-Rollers) 2006-Up (Cast # NSK HTF AR45-19AG)	1	
279	K46432	Bearing/Race Set, [4F27E] (Drive Gear) (Bearing # P900 / NP724285 Timken) 1999-Up	1	XS4Z-7F403-AB
280	46431A	Cup Race, [4F27E] (Pinion Bearing to Case) (Bearing # NP237427 Timken) (2.440"OD) 1999-Up	1	
281	46431B	Cone Bearing, [4F27E] (Pinion to Case) (Bearing # NP 986901 Timken) 1999-Up	1	
281	46435C	Cone Bearing, [FNR5 / FS5A-EL] (Driven Transfer Gear) (Both Sides) (28-Rollers) (.510"Thick) (1.495"ID) (Cast # KOYO 46TO80703-1) 2006-Up	2	
284	46437A	Shim, [4F27E] (Drive Preload) (.098" Thick) (2.965"OD) 1999-Up	1	XS4Z-7H106-AB
288	46434A	Cup Race, [4F27E] (Differential to Case & to Bell Housing) (2.560"OD) 1999-Up (Bearing # NP552557 Timken)	1-2	
288	46434C	Cup Race, [FNR5 / FS5A-EL] (Differential to Case) (2.556"OD) (.575"Wide) 2006-Up (Cast # NTN ECO-CR-08A48)	1-2	
289	46434B	Cone Bearing, [4F27E] (Differential to Case & to Bell Housing) (1.573"ID) 1999-Up (Bearing # NP320786)	1-2	
289	46434D	Cone Bearing, [FNR5 / FS5A-EL] (Differential to Case) (25-Rollers) 2006-Up (Cast # NTN ECO-CR-08A67)	1-2	
289	K46434	Bearing/Race Set, [4F27E] (Differential to Case & to Bell Housing) (Bearing # NP320786) 1999-Up	1-2	XS4Z-4221-AA
291	46434A	Cup Race, [4F27E] (Differential to Bell Housing) (2.560"OD) 1999-Up (Bearing # NP552557 Timken)	1	
291	46434C	Cup Race, [FNR5 / FS5A-EL] (Differential to Bell Housing) (2.556"OD) (.575"Wide) (Cast # NTN ECO-CR-08A48) 2006-Up	1-2	

4F27E (FORD)/FN4A-EL (MAZDA)/FNR5

292	46434B	Cone Bearing, [4F27E] (Differential to Bell Housing) (1.573"ID) (NP320786) 1999-Up	1	
292	46434D	Cone Bearing, [FNR5 / FS5A-EL] (Differential to Bell Housing) (25-Rollers) 2006-Up (Cast # NTN ECO-CR-08A67)	1-2	
293	46438A	Shim, [4F27E] (Differential to Bell Housing) **(*Specify Thickness .023" to .045")** (2.525"OD) 1999-Up	1	XS4Z-4067-CA
		GASKETS & RUBBER COMPONENTS		
300	46500	Gasket, [4F27E] (Bottom Pan) (Cork) 1999-Up	1	
300	46500B	Gasket, [FNR5 / FS5A-EL] (Bottom Pan) 2006-Up	1	
300	46500D	Gasket, [4F27E] (Bottom Pan) (Duraprene) 1999-Up	1	
	46501B	Gasket, [FNR5 / FS5A-EL] (Side Cover) 2006-Up	1	
311	46506	Lathe Cut Seal, [4F27E] (Ford) (Pump Body) 2000-Up	1	XS4Z-7A248-AC
311	46505	O-Ring, [4F27E] (Mazda) (Pump Body) 1999-Up	1	FN01-19-242
320	46501	Gasket,Valve Body [FN4A-EL] (Mazda) (Bonded) 1999-Up	1	
320	46502	Gasket,Valve Body [FN4A-EL] (Ford) 1999-Up	2	
322	46503	Gasket, [4F27E / FN4A-EL] (Front Control) (Solenoid) (Upper) 1999-05	1	
322	46504	Gasket, [4F27E / FN4A-EL] (Front Control) (Solenoid) (Lower) 1999-05	1	
		TECHNICAL MANUALS		
	TM4F27E	Technical Manual, [4F27E] (Ford, Focus)	1	ATSG
		ELECTRICAL COMPONENTS		
410	46627	Switch, [4F27E] (Neutral Safety) (9-Prong) (Cast # 4P-7F293-AB) 2000-4/04	1	5S4Z-7F293-AA
414	46960C	Sensor, [FNR5 / FS5A-EL] (Pressure) (1-Wire) (Screw-on) 2006-Up	1	
421 422	46950	Solenoid, [4F27E / FNR5 / FS5A-EL] (Shift) (On/Off) (A & B Solenoid) 1999-Up	1-2	XS4Z-7H148-AA
422	46950C	Solenoid, [FNR5 / FS5A-EL] (Shift) (With Yellow Connector) 2006-Up	1	
423 426 427	46951	Solenoid, [4F27E / FNR5 / FS5A-EL] (PWM) (C, D, & E Solenoid) 1999-Up	1-3	XS4Z-7G484-AA
431	46949	Solenoid, [4F27E / FNR5 / FS5A-EL] (EPC) 1999-Up	1	XS4Z-7G383-AA
436	46957	Sensor, [4F27E] (Output Speed) (2-Prong) (Cast # XS4P) 1999-5/2005	1	XS4Z-7H103-AB
436	46957C	Sensor, [FNR5 / FS5A-EL] (Output Speed) (3-Prong) (Cast # G4TO) 2006-Up	1	
438	46959	Sensor, [4F27E] (Input Speed) (In Case) (.625"OD at O-Ring) 1999-5/2005	1	XS4Z-7M101-AB
438	46959C	Sensor, [FNR5 / FS5A-EL] (Input Speed) (in Case) (Cast # G4TO-0190,5722) 2006-Up	1	
446	46995A	Wire Harness, [4F27E] (Internal) (9-Prong Case Connector, (5) 2-Prong Connectors, (2) 1-Prong Connectors, & (1) Ground)	1	XS4Z-7G276-AB
446	46995C	Wire Harness, [4F27E / FNR5 / FS5A-EL] (Internal) (9-Prong Case Connector, (4) 2-Prong Connectors, (2) 1-Prong Connectors, (1) Ground, & (1) Temp Sensor) 1999-Up	1	
446	46995D	Wire Harness, [FNR5 / FS5A-EL] (Auxillary Valve Body) (2-Blade Connector) (10-1/2" Long) 2006-Up	1	
		HARD PARTS		
500	46912A	Pump, [4F27E] (Ford Type) (.535" Thick Gears) (*Uses Square Cut Seal) 2000-Up	1	XS4Z-7A103-AC
500	46912	Pump, [4F27E] (Mazda Type) (.535" Thick Gears) (*Uses O-Ring) 1999-Up	1	
500	46912C	Pump, [FNR5 / FS5A-EL] (.610" Thick Gears) (*Uses O-Ring) 2006-Up	1	
510	46916A	Pump Body W/Gears, [4F27E] (Ford Type) (*Uses Square Cut Seal) 2000-Up	1	
510	46916	Pump Body W/Gears, [4F27E] (Mazda Type) (*Uses O-Ring) 1999-Up	1	
510	46916C	Pump Body W/Gears, [FNR5 / FS5A-EL] (.610" Thick Gears) (*Uses O-Ring) 2006-Up	1	
520	46919A	Stator, [4F27E] (Ford) (With 2-Plugs on End of Ring Tower) 2000-03	1	
520	46919	Stator, [4F27E] (Mazda Type) 1999-Up	1	

4F27E (FORD)/FN4A-EL (MAZDA)/FNR5

520	46919C	Stator, [FNR5] (With 1-Plug on End of Ring Tower) 2006-Up	1	
550	46832	Drum, [4F27E] (Overdrive Direct) (3-4 Clutch) (3 Clutch) (32 Teeth) (With 2-Holes in Bottom of Ring Bore) 1999-Up	1	XS4Z-7F283-AB
550	46832C	Drum, [FNR5 / FS5A-EL] (Overdrive Direct) (3 Clutch) (32 Teeth) (With 6-Holes in Bottom of Ring Bore) 2006-Up	1	
554	46831	Drum, [4F27E / FNR5 / FS5A-EL] (Forward) (With 12-1/8" Shaft) (4 Clutch) (32 Teeth) 1999-Up	1	XS4Z-7F207-AC
555	46719C	Drum, [FNR5 / FS5A-EL] (Direct Clutch) (2 Clutch) 2006-Up	1	
556	46830	Drum, [4F27E /FNR5 / FS5A-EL] (Reverse Clutch) (2 Clutch) (With 2-Check Balls) (18-Holes) (36 Teeth Steels) 1999-4/2005	1	XS4Z-7D044-AB
560	K46858	Piston Kit, [4F27E / FNR5 / FS5A-EL] (Direct) (3-4 Clutch) (Bonded) (With 20-Spring Retainer) 1999-Up	1	
564	K46856	Piston Kit, [4F27E / FNR5 / FS5A-EL] (Forward Clutch) (2-Bonded Pistons) (20-Spring Retainer) 1999-Up	1	
566	K46855A	Piston Kit, [4F27E / FNR5 / FS5A-EL] (Ford) (Reverse Clutch) (Bonded) (With 6-Notches) (12-Finger Spring) (1.475" Thick) 1999-Up	1	
566	K46855	Piston Kit, [FN4A-EL] (Mazda) (Reverse Clutch) (Bonded) (With 6-Notches) (12-Finger Spring) (1.375" Thick)	1	
567	K46860	Piston Kit, [4F27E] (Low & Reverse Clutch) (Bonded) (12-Finger Spring & .040" Thick Snap Ring) 1999-Up	1	
570	46841	Hub, [4F27E] (Overdrive Direct) (3-4 Clutch) (32 Teeth) (24-Splines) (2.925" Tall) (6-Slots) 1999-11/2004	1	XS4Z-7H351-AB
570	46841A	Hub, [4F27E] (Overdrive Direct) (3-4 Clutch) (32 Teeth) (24-Splines) (2.925" Tall) (No Slots) 1999-Up	1	
570	46841C	Hub, [FNR5 / FS5A-EL] (Overdrive Direct) (25-Splines) (No Slots) (2.925" Tall) 2006-Up	1	
574	46840	Hub, [4F27E / FNR5 / FS5A-EL] (Forward Clutch) (32 Teeth) (1.705" Tall) 1999-Up	1	XS4Z-7B067-AC
582	46747	Planet, [4F27E] (Front) (Steel) (3 Gear) (20 Teeth on Gears) (108T) (34-Splines) (Neck is .984" Long) 1999-01	1	XS4Z-7A398-AB
582	46747A	Planet, [4F27E / FNR5 / FS5A-EL] (Front) (Steel) (3 Gear) (20 Teeth on Gears) (108T) (34-Splines) (Neck is .938" Long) 2002-Up	1	
584	46731	Planet, [4F27E] (Rear) (Steel) (3 Gear) (24-Inner Splines) (12-Lugs) 1999-Up	1	XS4Z-7D006-AB
584	46731C	Planet, [FNR5 / FS5-A-EL] (Rear) (Steel) (3 Gear) (25-Inner Splines) 2006-Up	1	
586	46736C	Planet, [FNR5 / FS5A-EL] (Reduction) (3 Gear) (8-1/4" Long Shaft) 2006-Up	1	
592	46749	Ring Gear, [4F27E / FNR5 / FS5A-EL] (Front) (42 Teeth Outer) (12-Lugs) (3.080" Thick) (89 Teeth Left Angled Inner) 1999-Up	1	
596	46825C	Ring Gear, [FNR5 / FS5A-EL] (Reduction Planet) (12-Lugs) (89 Teeth) (1.413"Thick) 2006-Up	1	
612	46730	Sun Gear, [4F27E / FNR5 / FS5A-EL] (Front) (49 Left Angled Teeth) (3.160" Long) 1999-11/2004	1	XS4Z-7A399-AB
614	46734	Sun Gear, [4F27E] (Rear) (37 Left Angled Teeth) (32-Lugs) (9-Slots) 1999-4/2005 (*Uses Bearing # 46422)	1	XS4Z-7A019-AB
614	46734A	Sun Gear, [4F27E] (Rear) (37 Left Angled Teeth) (32-Lugs) (9-Slots) 1999-Up (*Uses Bearing # 46423)	1	
614	46734C	Sun Gear, [FNR5 / FS5A-EL] (Rear) (37 Teeth) (32-Lugs) (8-Slots) 2006-Up	1	
616	46843C	Sun Gear, [FNR5 / FS5A-EL] (Reduction Planet) (31 Teeth) (1.315" Long) 2006-Up	1	
		SPRAGS & ONE WAY CLUTCHES		
650	46725C	Sprag, [FNR5 / FS5A-EL] (Reduction) (12-Rollers) (.685"Wide) (Plastic Case) 2006-Up	1	
654	46727	Sprag, [4F27E / FNR5 / FS5A-EL] (Low / Reverse) (20-Element) (.465" Thick) (Brass End Caps) 1999-Up	1	XS4Z-7A089-AB
		HARD PARTS (Continued)		
660	46756C	Inner Race, [FNR5 / FS5A-EL] (Reduction Sprag) (.640" Thick) (14-Splines) 2006-Up	1	
664	46757	Inner Race, [4F27E / FNR5 / FS5A-EL] (Low Sprag) (3.900"OD) (.775" Thick) 1999-Up	1	XS4Z-7D171-AB
689	46844	Oil Shield, [4F27E] (Pinion Bearing to Case) (2.389"OD) 1999-Up	1	

4F27E (FORD)/FN4A-EL (MAZDA)/FNR5

690	46894	Park Gear, [4F27E] (11-Lugs) (36-Splines) 1999-Up	1	
690	46894C	Park Gear, [FNR5 / FS5A-EL] (11-Lugs) (32-Splines) 2006-Up	1	
694	46439	Retainer, [4F27E / FNR5 / FS5A-EL] (Low Sprag) (.028" Thick) (4-Lugs) (5.080"OD) 1999-Up	1	XS4Z-7H199-AB
694	46439C	Retainer, [FNR5 / FS5A-EL] (Reduction Sprag) (3-Lugs) (2.515"OD) 2006-Up	1	
710	46870	Gear, [4F27E] (Drive Transfer) (59 Teeth) 1999-Up	1	XS4Z-7F342-AB
710	46870C	Gear, [4F27E] (Drive Transfer) (87 Teeth) 1999-Up	1	
710	46870B	Gear, [FNR5 / FS5A-EL] (Drive Transfer) (86 Teeth) 2005-Up	1	
712	46871	Gear, [4F27E] (Driven Transfer) (57 Teeth) 1999-Up	1	
712	46871A	Gear, [4F27E] (Driven Transfer) (83 Teeth) 1999-Up	1	
712	46871B	Gear, [FNR5 / FS5A-EL] (Driven Transfer) (82 Teeth) 2006-Up	1	
715		Differential Assembly, **(*Specify Ford or Mazda)** (**Ford**- *Uses Stamped Pick-Up & is 1.180" Where Axle Goes in) (**Mazda**- *Uses Cast Pick-Up & is Stepped Where Axle Goes in) (1.260" Stepped to 1.100")		
715	46880	Differential Assembly, [4F27E] (85 Teeth Ring Gear) (1-Groove) (34 Teeth Pick-Up) 99-Up	1	
715	46880A	Differential Assembly, [4F27E] (85 Teeth Ring Gear) (1-Groove) (24 Teeth Pick-Up) 99-Up	1	
715	46880C	Differential Assembly, [4F27E] (86 Teeth Ring Gear) (2-Grooves) (24 Teeth Pick-Up) 1999-Up	1	
715	46880B	Differential Assembly, [4F27E] (86 Teeth Ring Gear) (3-Grooves) (24 Teeth Pick-Up) 1999-Up	1	
715	46880D	Differential Assembly, [4F27E] (89 Teeth Ring Gear) (2-Grooves) (24 Teeth PIck-Up) 1999-Up	1	
715	46880E	Differential Assembly, [FNR5] (85 Teeth Ring Gear) (No Groove) (14-Bolt) (25-Roller Cone Bearings) (24 Teeth Pick-Up) 2006-Up	1	
730	46849	Pinion, [4F27E] (21 Teeth) (3-Grooves) (4.090" Long) 1999-Up	1	
730	46849B	Pinion, [4F27E] (22 Teeth) (1-Groove) 1999-Up	1	
730	46849A	Pinion, [4F27E] (21 Teeth) (2-Grooves) 1999-Up	1	
730	46849E	Pinion, [FNR5 / FS5A-EL] (21 Teeth) (No Groove) (1.360" Long) (With ID Spline) 2006-Up	1	
		VALVE BODY COMPONENTS		
	46892-01K	Valve, [4F27E / FN4A-EL] (Oversized Pressure Regulator) (Includes: 1-Valve, 1-End Plug) (Ford Only*) **(*Requires Tools: F-46892-TL & VB-FIX)**	1	Sonnax
		VALVE BODIES (REBUILT)		
740	FD-3390	Valve Body, [4F27E] (Focus) (5-Solenoid) 2000-Up	1	
		VALVE BODIES		
740	46892	Valve Body, [4F27E] (Ford) (6-Solenoid) (Cast # XS4P-7A101-AC) 2000-Up	1	
740	46892A	Valve Body, [4F27E / FN4A-EL] (Mazda) (6-Solenoid) (Cast # FN11) 1999-Up	1	
740	46892C	Valve Body, [FNR5 / FS5A-EL] (6-Solenoid) (Cast # FS50) 2006-Up	1	
744	46892D	Auxillary Valve Body, [FNR5 / FS5A-EL] (2-Solenoids) (Cast # 050726D355) 2006-Up	1	
		HARD PARTS (Continued)		
750	46703C	Bell Housing, [FNR5 / FS5A-EL] (5-1/4" Top Bolts) (Starter at 11:00) (Cast # RF-XS4P-7976AD)	1	XS4Z-7005-AC
750	46703	Bell Housing, [4F27E] (6-1/4" Top Bolts) (Starter at 10:00) (Cast # FN11)	1	
750	46703A	Bell Housing, [4F27E] (6-3/8" Top Bolts) (Starter at 10:00) (Cast # FN41)	1	
750	46703B	Bell Housing, [4F27E] (5-1/8" Top Bolts) (Starter at 2:00) (Cast # XS4P-7976-BD) 2004-Up	1	3S4Z-7005-BA
759	46804A	Rear Cover, [4F27E] (Mazda) (9-Bolt) (Aluminum) (4-Rings) (No Cooler Line Fittings) 1999-Up	1	
759	46804	Rear Cover, [4F27E] (Ford) (9-Bolt) (Aluminum) (4-Rings) (With 1-Cooler Line Fitting Hole) 1999-04	1	XS4Z-7222-BA

4F27E (FORD)/FN4A-EL (MAZDA)/FNR5

759	46804C	Rear Cover, [FNR5 / FS5A-EL] (9-Bolts) (Aluminum) (4-Rings) (No Coolerline Fitting) (With Bronze Bushings) 2006-Up	1	
760	46701	Case, [4F27E] (Cast # RFXS-4P by Axle Seal) (Ford Type) (1-Cooler Line Fitting) 1999-Up	1	
760	46701A	Case, [4F27E / FN4A-EL] (Mazda Type) (2-Cooler Line Fittings)	1	
760	46701C	Case, [FNR5 / FS5A-EL] (2-Pan Type) (Cast # FS5019421 on Rear of Case) 2006-Up	1	
765	46801	Pan, [4F27E] (20-Bolts to Case) 1999-Up	1	XS4Z-7A194-AB
765	46801C	Pan, [FNR5 / FS5A-EL] (Deep With Drain Plug) (20-Bolts to Case) 2006-Up	1	
766	46802C	Side Pan, [FNR5 / FS5A-EL] (11-Bolts) 2006-Up	1	
795	46948	Nut, [4F27E / FNR5 / FS5A-EL] (Transfer Drive Gear) (1.710"ID) (Right Hand Threads) (4-Notches) 1999-Up	1	XS4Z-7B364-AB
855	46930	Retainer, [4F27E] (Reverse Clutch) (2.875"OD) (2.500"ID) 1999-Up	1	XS4Z-7D406-AB
855	46930C	Retainer, [FNR5 / FS5A-EL] (Reverse Clutch) (With 4-Tabs) 2006-Up	1	
857	46810	Cushion, [4F27E / FNR5 / FS5A-EL] (Low / Reverse) (6-1/8"OD) (.088" Thick) 1999-Up	1	XS4Z-7B070-BB
	K46928	Snap Ring Kit, [4F27E / FN4A-EL] 1999-Up	1	
890	46600	Ring, [4F27E / FNR5 / FS5A-EL] (Overdrive Clutch) (4.925"OD) 1999-Up	1	
892	46601	Ring, [4F27E / FNR5 / FS5A-EL] (Rear Sun Gear to Reverse Drum) (.055") (6 "OD) 1999-Up (*Also Reverse Clutch Pressure Plate)	1-2	XS4Z-7D483-AA
892	46601A	Ring, [4F27E / FNR5 / FS5A-EL] (Rear Sun Gear to Reverse Drum) (.062") (6 "OD) 1999-Up (*Also Reverse Clutch Pressure Plate)	1-2	XS4Z-7D483-AC
892	46601B	Ring, [4F27E / FNR5 / FS5A-EL] (Rear Sun Gear to Reverse Drum) (.071") (6 "OD) 1999-Up (*Also Reverse Clutch Pressure Plate)	1-2	XS4Z-7D483-AE
893	46602	Snap Ring, [4F27E / FNR5 / FS5A-EL] (Reverse Drum) (.040" Thick) (2.544"OD) 1999-Up	1	XS4Z-7H075-AB
900	K46528	Servo Assembly, [4F27E / FNR5 / FS5A-EL] (Bonded Piston & 3-Bolt Cover) 1999-Up	1	
905	46528	Piston, [4F27E] (Overdrive Servo) (Bonded) 1999-Up	1	XS4Z-7D021-AB
926	46281A	Spring, [4F27E / FNR5 / FS5A-EL] (Accumulator) (Front, Outer) (3" Long) 1999-Up	1	XS4Z-7G267-AB
926	46281AA	Spring, [4F27E / FNR5 / FS5A-EL] (Accumulator) (Rear, Outer) (2-11/16" Long) 1999-Up	1	XS4Z-7G300-AB
926B	46281B	Spring, [4F27E] (Accumulator) (Front, Inner) (2-1/8" Long) 1999-Up	1	XS4Z-7G326-AB
926B	46281BB	Spring, [4F27E / FNR5 / FS5A-EL] (Accumulator) (Rear, Inner) (2-11/16" Long) 1999-Up	1	XS4Z-7G395-AA
926B	46281C	Spring, [FNR5 / FS5A-EL] (Accumulator) (Front, Inner) (1-15/16" Long) 2006-Up	1	
927	46837A	Piston, [4F27E / FNR5 / FS5-A-EL] (Accumulator) (Takes 2) 1999-Up	1	XS4Z-7F251-AB
	K46940A	Piston Set, [4F27E] (Ford) (With 6-Bonded Pistons) 2000-Up (The Reverse Clutch Piston Is 1.475" Thick)	1	
	K46940	Piston Set, [4F27E] (Mazda) (With 6-Bonded Pistons) 1999-Up (The Reverse Clutch Piston Is 1.375" Thick)	1	
960	K46940C	Piston Set, [FNR5 / FS5A-EL] (Bonded) 2006-Up	1	
960	46858	Piston, [4F27E / FNR5 / FS5A-EL] (Overdrive Direct Clutch) (Bonded) 1999-Up	1	
960B	46859	Piston, [4F27E / FNR5 / FS5A-EL] (Overdrive Direct Clutch) (Balance) (Bonded) 1999-Up	1	
961	46861C	Piston, [FNR5 / FS5A-EL] (Reduction Clutch) (Bonded) (.850" Thick) (4.310"OD) 06-Up	1	
964	46856	Piston, [4F27E / FNR5 / FS5A-EL] (Forward Clutch) (Bonded) 1999-Up	1	
964B	46857	Piston, [4F27E / FNR5 / FS5A-EL] (Forward Clutch) (Balance) (Bonded) 1999-Up	1	
965	46862C	Piston, [FNR5 / FS5A-EL] (Direct Clutch) (Bonded) (.650" Thick) (4.490"OD) (2.200"ID) 2006-Up	1	
966	46855	Piston, [FN4A-EL] (Mazda) (Reverse Clutch) (Bonded) (1.375" Tall) 1999-Up	1	
966	46855A	Piston, [4F27E / FNR5 / FS5A-EL] (Reverse Clutch) (Bonded) (1.475" Tall) 2000-Up	1	
967	46860	Piston, [4F27E / FNR5 / FS5A-EL] (Low / Reverse Clutch) (Bonded) 1999-Up	1	

4F27E (FORD)/FN4A-EL (MAZDA)/FNR5

976	46811	Spring, [4F27E / FNR5 / FS5A-EL] (Reverse Clutch Beveled) (12-Fingers) (.055” Thick) (4.785”) 1999-Up	1	
977	46812	Spring, [4F27E / FNR5 / FS5A-EL] (Low & Reverse Beveled) (12-Fingers) (.050” Thick) 1999-Up	1	XS4Z-7B070-AB
991	K46687	Detent Assembly, [4F27E] (With Rooster Comb) 1999-Up	1	
991	46675	Shift Rod, [4F27E] (Linkage) (11-5/8” Long) 1999-Up	1	
991	46894	Bracket, [4F27E] (Actuator) (2-Bolt) 1999-Up	1	
992	46675A	Shifter Arm, [4F27E] (External) (Bolt-on) (2-3/4” Long) 1999-Up	1	XS4Z-7A256-AA
994	46677	Park Rod, [FNR5 / FS5A-EL] (6-1/4” Long) 1999-Up	1	XS4Z-7A232-AB
996	46280	Cooler Fitting, [4F27E] (19mm) (Screen-In) (Takes 2) 1999-Up	2	YS4Z-7D273-AA
999	K46679	Tube, [4F27E] (Inside Case) (4” Long) 1999-Up	1	YS4Z-7N148-AB

TF-81SC/AF21(FORD) / TF-80SC/AF40 (VOLVO)

FWD 6 Speed

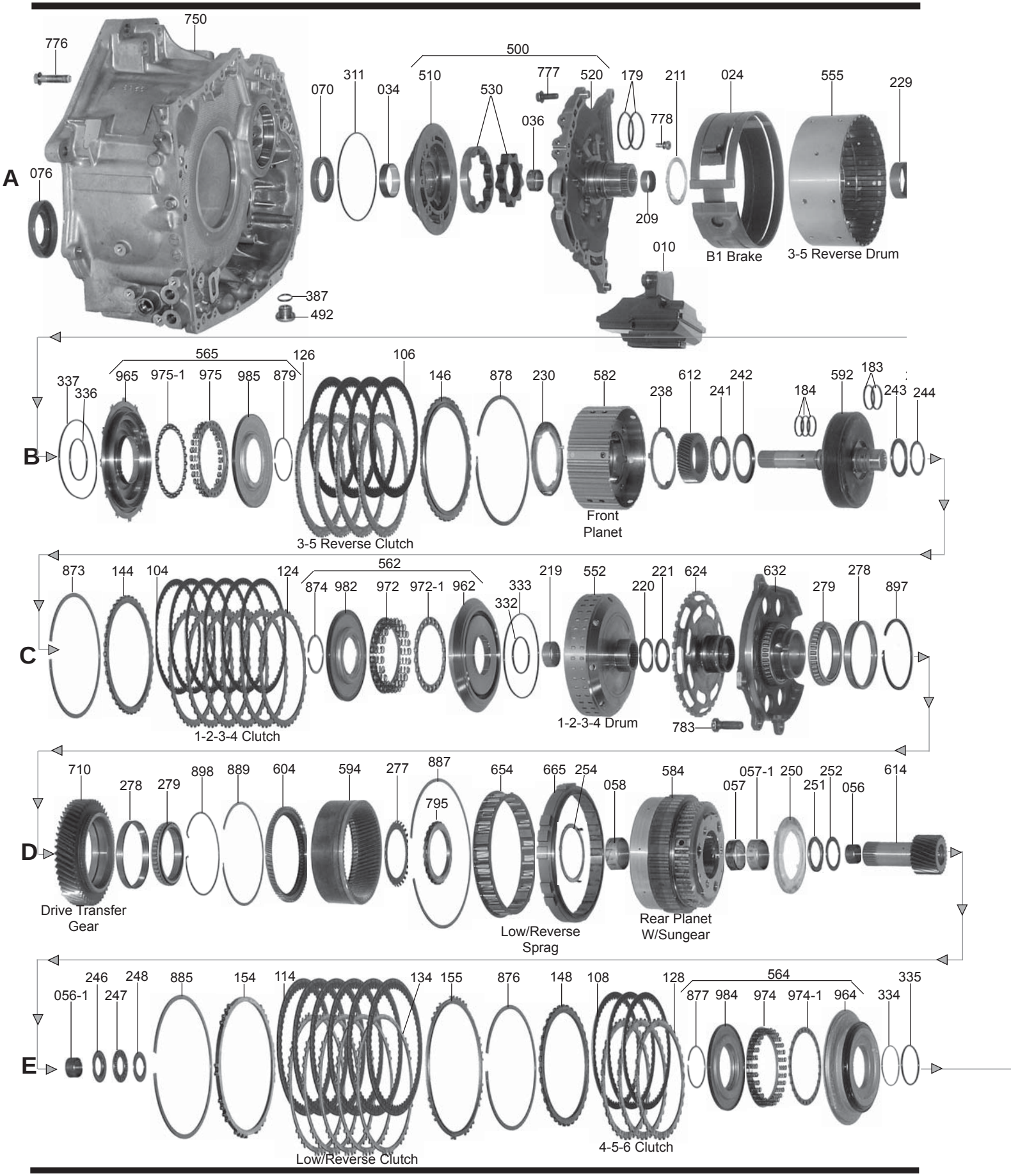

TF-81SC/AF21(FORD) / TF-80SC/AF40 (VOLVO)

FWD 6 Speed

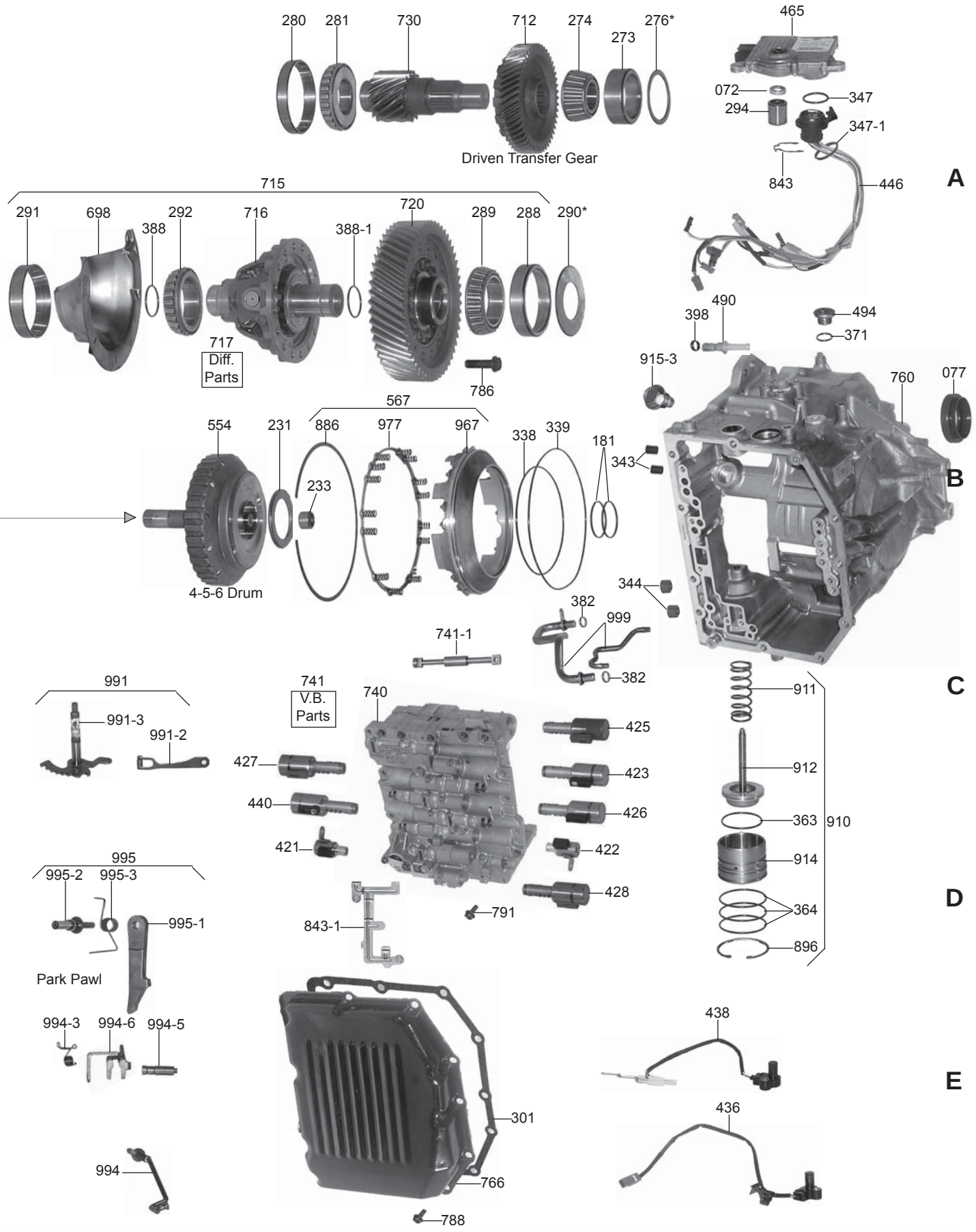

TF-81SC/AF21(FORD) / TF-80SC/AF40 (VOLVO)

ILL#	PART#	DESCRIPTION	QTY	REF #
		OVERHAUL KITS		
	K106900	Overhaul Kit, [TF-81SC / AF21] (Without Pistons) 2005-Up	1	
	K106900A	Overhaul Kit, [TF-80SC] (Without Pistons) 2006-Up	1	
		MASTER L/STEELS KIT		
	DK10600-S	Master L/Steels Kit, [TF-81SC / AF21] (Without Pistons) 2005-Up	1	
	DK10600A-S	Master L/Steels Kit, [TF-80SC] (Without Pistons) 2006-Up	1	
		MASTER W/STEELS KIT		
	DK10600	Master W/Steels Kit, [TF-81SC / AF21] (Without Pistons) 2005-Up	1	
	DK10600A	Master W/Steels Kit, [TF-80SC] (Without Pistons) 2006-Up	1	
		FILTERS		
010	106710	Filter, [TF-81SC] 2005-Up	1	
		BANDS		
024	106700	Band, [TF-81SC] (B1-Brake) (2-3/8" Wide) (Split) 2005-Up	1	
		BUSHINGS		
	K106901	Bushing Kit, [TF-81SC] 2005-Up	1	
034	106005	Bushing, [TF-81SC] (Pump Body) (1.850"ID) (With Oil Pockets) 2005-Up	1	
036	106002	Bushing, [TF-81SC] (Pump Stator) (Front) (.660"Wide) (.990"ID) (Brass) 2005-Up	1	
056	106017	Bushing, [TF-81SC] (Rear Sun Gear) (Front) (.520"Wide) (1.078"OD) (.955"ID) (Brass) (With Oil Pockets) 2005-Up	1	
056-1	106017A	Bushing, [TF-81SC] (Rear Sun Gear) (Rear) (.500"Wide) (1.078"OD) (.955"ID) (Brass) (With Oil Pockets) 2005-Up	1	
057	106015	Bushing, [TF-81SC] (Rear Planet) (Front Sun Gear) (Front) (.425"Wide) (1.432"OD) (1.308"ID) (Brass) (With Oil Pockets)	1	
057-1	106015A	Bushing, [TF-81SC] (Rear Planet) (Front Sun Gear) (Rear) (.630"Wide) (1.365"OD) (1.308"ID) (Brass) (With Oil Pockets)	1	
058	106015B	Bushing, [TF-81SC] (Rear Planet) (Front) (.620"Wide) (1.875"OD) (1.721"ID) (Brass) (With Oil Pockets) 2005-Up	1	
		METAL CLAD SEALS		
070	106151A	Seal, [TF-80SC / TF-81SC] (Front) (2.475"OD) (1.820"ID) 2005-Up	1	
072	78197	Seal, [TF-80SC / TF-81SC] (Manual Lever) (.280" Thick) (.875"OD) (.435"ID) 2005-Up	1	
076	106152B	Seal, [TF-80SC] (Axle) (Bell Housing Side) (Right Side) (Volvo) (AWD) (Outer) 2006-Up	1	
076	106152A	Seal, [TF-81SC] (Axle) (Bell Housing Side) (Right Side) (Five Hundred, Montego) 2005-Up	1	
076	106152	Seal, [TF-81SC] (Axle) (Bell Housing Side) (Right Side) (MKZ, Fusion, Milan & Zephyer) 2005-Up	1	
076	106152C	Seal, [TF-80SC] (Axle) (Bell Housing Side) (Right Side) (Volvo) (AWD) (Inner) 2006-Up	1	
077	106153B	Seal, [TF-80SC] (Axle) (Differential Side) (Left Side) (Volvo) 2006-Up	1	
077	106153A	Seal, [TF-81SC] (Axle) (Differential Side) (Left Side) (Five Hundred, Montego) 2005-Up	1	
077	106153	Seal, [TF-81SC] (Axle) (Differential Side) (Left Side) (MKZ, Fusion, Milan & Zephyer) 2005-Up	1	
		FRICTIONS		
104	106101	Friction, (C1) [TF-80SC / TF-81SC] (1-2-3-4 Clutch) (.065") (54 Teeth) (6-3/16"OD) 2005-Up	6	
106	106103	Friction, (C3) [TF-80SC / TF-81SC] (3-5 Reverse Clutch) (.065") (54 Teeth) (6-1/2"OD) 2005-Up	4	
108	106105	Friction, (C2) [TF-80SC / TF-81SC] (4-5-6 Clutch) (.065") (55 Teeth) (6-5/16"OD) 2005-Up	3	
114	106107	Friction, (B2) [TF-80SC / TF-81SC] (Low / Reverse Clutch) (.063") (60 Teeth) (7-1/4"OD) 2005-Up	6	
	K106100	Friction Module, [TF-80SC / TF-81SC / AF21] 2005-Up	1	

TF-81SC/AF21(FORD) / TF-80SC/AF40 (VOLVO)

		STEELS		
124	106110	Steel, (C1) [TF-80SC / TF-81SC] (1-2-3-4 Clutch) (.070") (40 Teeth) (5.555"ID) 2005-Up	6	
126	106111	Steel, (C3) [TF-80SC / TF-81SC] (3-5 Reverse Clutch) (.091") (36 Teeth) (5.560"ID) 2005-Up	4	
128	106112	Steel, (C2) [TF-80SC / TF-81SC] (4-5-6 Clutch) (.070") (36 Teeth) (5.635"ID) 2005-Up	3	
134	106113	Steel, (B2) [TF-80SC / TF-81SC] (Low / Reverse Clutch) (.068") (14 Teeth) (6-13/16"ID) 2005-Up	5	
	K106110	Steel Module, [TF-80SC / TF-81SC /AF21] 2005-Up	1	
		PRESSURE PLATES		
144	106715	Pressure Plate, [TF-80SC / TF-81SC] (1-2-3-4 Clutch) (.131") (40 Teeth) (5.560"ID) (Stepped) 05-Up	1	
146	106716	Pressure Plate, [TF-80SC / TF-81SC] (3-5 Reverse Clutch) (.121") (54 Teeth) (5-9/16"ID) (Stepped) 2005-Up	1	
148	106717	Pressure Plate, [TF-80SC / TF-81SC] (4-5-6 Clutch) (.121") (36 Teeth) (5-5/8"ID) (Stepped) 2005-Up	1	
154	106718	Pressure Plate, [TF-80SC / TF-81SC] (Low / Reverse Clutch) (Top) (.205") (14 Teeth) (6-13/16"ID) 2005-Up	1	
155	106719	Apply Plate, [TF-80SC / TF-81SC] (Low / Reverse Clutch) (Bottom) (.141") (14 Teeth) (6-13/16"ID) (Stepped) 2005-Up	1	
		SEALING RINGS		
	K106903	Ring Kit, [TF-80SC / TF-81SC] (Teflon) 2005-Up	1	
179	106301	Ring, [TF-80SC / TF-81SC] (3-5 Reverse Clutch) (Stator) (.090" Wide) (2.020"OD) (Teflon) 2005-Up	1	
181	106302	Ring, [TF-80SC / TF-81SC] (4-5-6 Clutch) (Sets In Case) (.089" Wide) (1.855"OD) (Teflon) 2005-Up	2	
183	106303	Ring, [TF-80SC / TF-81SC] (Input Shaft) (Rear to 1-2-3-4 Clutch Drum) (.090" Wide) (1.360"OD) (Teflon) 2005-Up	2	
184	106304	Ring, [TF-80SC / TF-81SC] (Front Planet Ring Gear Input Shaft to Stator) (.089" Wide) (1.140"OD) (Teflon) 2005-Up	3	
		WASHERS & BEARINGS		
209	106415	Caged Needle Bearing, [TF-81SC] (Stator) (Rear) (.475" Wide) (1.340"OD) (37-Needles) 2005-Up	1	
211	106401	Washer, [TF-81SC] (Stator to 3-5 Reverse Drum) (.046" Thick) (2.530"OD) (1-Tab, Plastic) 2005-Up	1	
219	106416	Caged Needle Bearing, [TF-81SC] (1-2-3-4 Clutch Drum) (.500" Thick) (1.360"OD) (1.185"ID) (Cast # NSK D8503020W) 2005-Up	1	
220	106441	Race, [TF-81SC] (1-2-3-4 Clutch Drum to Drive Shell) (.060" Thick) (1.845"OD) (1.390"ID) 2005-Up	1	
221	106417	Bearing W/Race, [TF-81SC] (1-2-3-4 Clutch Drum to Drive Shell) (.110"Thick) (1.790"OD) (1.310"ID)	1	
229	106418	Caged Needle Bearing, [TF-81SC] (3-5 Reverse Drum) (.630" Wide) (Cast # NSK 00504607WA)	1	
230	106402	Washer, [TF-81SC] (3-5 Reverse Clutch Drum to Front Planet) (.166" Thick) (3.980"OD) (2.965"ID) (3-Hollow Legs) (Plastic) 2005-Up	1	
231	106418	Bearing W/Races, [TF-81SC] (4-5-6 Clutch Drum to Case) (.160"Thick) (2.945"OD) (1.990"ID) 05-Up	1	
233	106419	Caged Needle Bearing, [TF-81SC] (4-5-6 Clutch Drum Pilot to Case) (.525" Thick) (.865"OD) (Presses Into Case) (Cast # DB501608W) 2005-Up	1	
238	106403	Washer, [TF-81SC] (Front Planet to Front Ring Gear) (.047" Thick) (3.345"OD) (2.875"ID) (3-Tab)	1	
241	106420	Bearing W/Race, [TF-81SC] (Front Planet Sun Gear to Ring Gear) (.170" Thick) (2.400"OD) (1.730"ID)	1	
242	106442	Race, [TF-81SC] (Bearing # 241 to Front Planet Ring Gear) (2.703"OD) (1.850"ID) 2005-Up	1	
243	106421	Bearing W/Race, [TF-81SC] (Front Planet Ring Gear to 1-2-3-4 Clutch Drum) (.110" Thick) (2.065"OD) (1.545"ID) 2005-Up	1	
244	106443	Race, [TF-81SC] (Bearing # 243 to 1-2-3-4 Clutch Drum) (.032" Thick) (1.905"OD) (1.508"ID)	1	
246	106444	Race, [TF-81SC] (Rear Sun Gear to 4-5-6 Clutch Drum) (Front) (.031" Thick) (1.712"OD) (1.015"ID)	1	
247	106422	Bearing, [TF-81SC] (Rear Sun Gear to 4-5-6 Clutch Drum) (.137" Thick) (1.715"OD) (.960"ID) 19-Rollers)	1	
248	106445	Race, [TF-81SC] (Rear Sun Gear to 4-5-6 Clutch Drum) (Rear) (.032"Thick) (1.635"OD) (.960"ID)	1	
250	106404	Washer, [TF-81SC] (Rear Planet to 4-5-6 Clutch Drum) (.230" Thick) (4.105"OD) (2.638"ID) (6-Hollow Leg)	1	

251	106423	Bearing W/Race, [TF-81SC] (Rear Planet to Rear Sun Gear) (.130" Thick) (1.910"OD) (1.383"ID)	1	
252	106446	Race, [TF-81SC] (Rear Planet to Rear Sun Gear) (.032" Thick) (1.790"OD) (1.315"ID) 2005-Up	1	
254	106405	Washer, [TF-81SC] (Support to Rear Planet) (.049" Thick) (4.142"OD) (2.685"ID) (3-Tab) (Brass)	1	
273	106978	Cup Race, [TF-81SC] (Pinion Shaft to Case) (.940" Thick) (2.780"OD) (Cast # NSK NTF-R33-5g)	1	
274	106977	Cone Bearing, [TF-81SC] (Pinion Shaft to Case) (1.300"ID) (19-Rollers) (Cast # NSK NTF R33-5g)	1	
276	106447	Shim, [TF-81SC] (Pinion Bearing to Case) (Selective) (2.755"OD) (2.245"ID) 2005-Up	1	
277	106406	Lock Washer, [TF-81SC] (Under # 795 Nut) (.039" Thick) (2.585"OD) 2005-Up	1	
278	106978A	Cup Race, [TF-81SC] (Support to Drive Transfer Gear) (Both Sides) (.382" Thick) (3.665"OD) (Cast # NSK R68-2) 2005-Up	2	
279	106977A	Cone Bearing, [TF-81SC] (Support to Drive Transfer Gear) (Both Sides) (2.675"ID) (41-Rollers) (Cast # NSK R68-1) 2005-Up	2	
280	106978B	Cup Race, [TF-81SC] (Bell Housing to Pinion) (.590" Thick) (3.700"OD) (Cast # NSK NTF R41Z-24g)	1	
281	106977B	Cone Bearing, [TF-81SC] (Bell Housing to Pinion) (25-Rollers) (1.640"ID) (Cast # NSK NTF R41Z-24g)	1	
288	106978C	Cup Race, [TF-81SC] (Differential to Case) (.745" Thick) (3.625"OD) (Cast # KOYO ST6292)	1	
289	106977C	Cone Bearing, [TF-81SC] (Differential to Case) (2.420"ID) (29-Rollers) (Cast # KOYO ST6292)	1	
290	106448	Shim, [TF-81SC] (Differential Bearing to Case) (Selective) (3.590"OD) (1.895"ID) 2005-Up	1	
291	106978D	Cup Race, [TF-81SC] (Bell Housing to Differential) (.740" Thick) (3.700"OD) (Cast # KOYO ST 5994)	1	
292	106977D	Cone Bearing, [TF-81SC] (Bell Housing to Differential) (2.320"ID) (24-Rollers) 2005-Up (Cast # KOYO ST 5994)	1	
294	106424	Caged Needle Bearing, [TF-81SC] (Manual Shaft) (.925"Long) (.785"OD) (11-Needles) 2005-Up	1	
		GASKETS & RUBBER COMPONENTS		
301	106500AD	Gasket, [TF-80SC] (Side Pan) (Duraprene) 2006-Up	1	
301	106500D	Gasket, [TF-81SC] (Side Pan) (12-Bolt Holes) (Duraprene) 2005-Up	1	
311	106274	O-Ring, [TF-81SC] (Pump Body) (.098" Thick) (5"OD) 2005-Up	1	
347	106451	Lathe Cut Seal, [TF-81SC] (Case Connector to Case) (.150" Thick) (1.370"OD) 2005-Up	1	
347	106451A	O-Ring, [TF-81SC] (Case Connector to TCM) (.095" Thick) (1.295"OD) (1.095"ID) 2005-Up	1	
		ELECTRICAL COMPONENTS		
421	106951	Solenoid, [TF-81SC] (Shift-A) (1.630" Long) (Black Connector) 2005-Up (*Also Fits Shift-B # 422)	1	
422	106951	Solenoid, [TF-81SC] (Shift-B) (1.630" Long) (Black Connector) 2005-Up	1	
423	106952	Solenoid, [TF-81SC] (Shift-C) (3.330" Long) (Black Connector) (Cast # 11BN4M08960) 2005-Up	1	
425	106942	Solenoid, [TF-81SC] (TCC) (3.255" Long) (Grey Connector) (Cast # 12CJ4M04741) 2005-Up	1	
426	106956	Solenoid, [TF-81SC] (Shift-E) (3.330" Long) (Black Connector) (Cast # 10C44M07211) 2005-Up	1	
427	106953	Solenoid, [TF-81SC] (Shift-D) (3.340" Long) (Grey Connector) (Cast # 14BM4M15382) 2005-Up	1	
428	106946	Solenoid, [TF-81SC] (Line Pressure) (3.330" Long) (Grey Connector) (Cast # 14BM4L11834) 05-Up	1	
436	106958	Sensor, [TF-81SC] (Output) (2-Blade) (Brown Connector) (13" Wire Harness) 2005-Up	1	
438	106954	Sensor, [TF-81SC] (Input) (2-Blade) (White Connector) (11" Wire Harness) 2005-Up	1	
440	106955	Solenoid, [TF-81SC] (Shift-F) (3.320"Long) (Black Connector) (Cast # 14CD4L12494) 2005-Up	1	
446	106995	Wire Harness, [TF-81SC] (Internal) (20-Pin TCM Connector) (With (10) 2-Prong Connectors & (1) Temp Sensor) 2005-Up	1	
465	106990	TCM, [TF-81SC] (With Neutral Safety Switch) (20-Pin Round Connector to Case) (12-Pin With 4-Blade Rectangle Connector to External Wire Harness) (3-Bolts to Case) 2005-Up	1	
		MISCELLANEOUS COMPONENTS		
490	106091	Vent, [TF-81SC] (Case) (Plastic, Push-In) (2" Long) 2005-Up	1	
492	106092	Drain Plug, [TF-81SC] (On Bottom of Bell Housing) (Allen Head) (1.005"OD) (.605"Tall) (*With Magnet)	1	

494	106093	Filler Plug, [TF-81SC] (On Top of Case) (Torx Head) (1.005”OD) (.620” Tall) 2005-Up	1	
		HARD PARTS		
500	106911	Pump Assembly, [TF-81SC] (9-Lobes on Inner Gear) (.437” Thick) 2005-Up	1	
510	106912	Pump Body W/Gears, [TF-81SC] (9-Lobes on Inner Gear) (With 2-Inner Lugs) (.437” Thick) 2005-Up	1	
520	106913	Stator, [TF-81SC] (4-1/2” Long Shaft) 2005-Up	1	
530	K106201	Pump Gears, [TF-81SC] (9-Lobes on Inner Gear) (With 2-Inner Lugs) 2005-Up	1	
552	106732	Drum, [TF-81SC] (1-2-3-4 Clutch) (6-9/16”OD) (2.470” Tall) (1.750”OD Hub) 2005-Up	1	
554	106733	Drum With Shaft, [TF-81SC] (4-5-6 Clutch) (6-1/16” Long) (1.840” ID of Shaft) 2005-Up	1	
555	106734	Drum, [TF-81SC] (3-5 Reverse Clutch) (4-Clutch) (3.050” Tall) (6-15/16”OD) (2.010”ID Ring Bore) 2005-Up	1	
562	K106762	Piston Kit, [TF-81SC] (1-2-3-4 Clutch) (Bonded) 2005-Up	1	
564	K106763	Piston Kit, [TF-81SC] (4-5-6 Clutch) (Bonded) 2005-Up	1	
565	K106764	Piston Kit, [TF-81SC] (3-5 Reverse Clutch) (Bonded) 2005-Up	1	
567	K106765	Piston Kit, [TF-81SC] (Low / Reverse Clutch) 2005-Up	1	
582	106747	Planet, [TF-81SC] (Front) (3 Gear, Steel) (45 Teeth Sun Gear) (2-1/4”Wide) (5-1/2”OD) 2005-Up	1	
584	106731	Planet, [TF-81SC] (Rear) (33 Teeth Sun Gear-Stays In Planet) (2.180”Wide) (2.495”OD) (1.720”OD Hub)	1	
592	106757	Ring Gear W/Input Shaft, [TF-81SC] (Front Planet) (81 Teeth) (5.165”OD) (7-1/4” Shaft) (23-Splines)	1	
594	106758	Ring Gear, [TF-81SC] (Rear Planet) (72 Teeth) (1.725” Wide) (5.530”OD) 2005-Up	1	
604	106741	Hub, [TF-81SC] (Rear Planet Ring Gear) (.470” Thick) (5.110”OD) 2005-Up	1	
612	106753	Sun Gear, [TF-81SC] (Front Planet) (45 Teeth) (.708” Thick) (2.705”OD) 2005-Up	1	
614	106755	Sun Gear, [TF-81SC] (Rear Planet) (Rear) (27 Teeth) (4.145” Long) (2.065”OD) 2005-Up	1	
624	106764	Drive Shell, [TF-81SC] (1.710” Thick) (6-13/16”OD) (2.045”OD Hub) (36 Outer Teeth) 2005-Up	1	
632	106756	Support, [TF-81SC] (Drive Transfer Gear) (1.657” Tall) (2.095”ID) (6-Bolt) (Cast Iron) 2005-Up	1	
		SPRAGS		
654	106727	Sprag, [TF-81SC] (Low / Reverse) (20-Rollers) (With Plastic Cage) (With 5-Brass Spacers) (6-7/8”OD) 2005-Up	1	
665	106941	Outer Race, [TF-81SC] (Low / Reverse Sprag) (.805” Thick) (7-3/4”OD) (6-1/2”ID) (13-Outer Lugs) 2005-Up	1	
		HARD PARTS (Continued)		
698	106843	Oil Baffle, [TF-81SC] (Bell Housing to Differential) (3-Bolt) (Tin) 2005-Up	1	
710	106194	Gear, [TF-81SC] (Drive Transfer) (51 Teeth) (1.327” Thick) (5.620”OD) (3.655”ID) 2005-Up	1	
712	106195	Gear, [TF-81SC] (Driven Transfer) (50 Teeth) (15-Park Lugs) 2005-Up	1	
715	106181	Differential Assembly, [TF-81SC] (With 53 Teeth Ring Gear) 2005-Up	1	
716	106180	Differential Housing, [TF-81SC] (Less Ring Gear) (16-Bolt Holes) (7” Tall) (24 & 29-Roller Bearing) 2005-Up	1	
720	106190	Ring Gear, [TF-81SC] (Differential) (53 Teeth) (1.715” Thick) (8-1/8”OD) 2005-Up	1	
730	106196	Pinion, [TF-81SC] (15 Teeth) (6-1/2” Long) 2005-Up	1	
		VALVE BODIES		
740	106754	Valve Body, [TF-81SC] (Ford) (8-Solenoid) (Cast # 5G13-7Z488-8A)	1	
		HARD PARTS (Continued)		
741	106683	Manual Valve, [TF-81SC] (4.500” Long) (3-Lands) 2005-Up	1	
750	106703	Bell Housing, [TF-81SC] (3-1/4” Top Bolts) (Starter at 11:00) (5-1/2” Thick) 2005-Up	1	
760	106701	Case, [TF-81SC] (Ford) (Metal Tag # TF-81SC) 2005-Up	1	

TF-81SC/AF21(FORD) / TF-80SC/AF40 (VOLVO)

766	106801	Pan, [TF-81SC] (Side) (12-Bolt) 2005-Up	1	
795	106948	Nut, [TF-81SC] (Holds Drive Transfer Gear to Support) (2.500”ID) (24-Outer Notches) 2005-Up	1	
843	106094	Clip, [TF-81SC] (Holds Internal Wire Harness to Case) (1.275”Wide) (With 2-Eyelets) 2005-Up	1	
843-1	106095	Bracket, [TF-81SC] (Holds Solenoid Retaining Pins In Valve Body) (2-Bolt) 2005-Up	1	
	K106928	Kit, Snap Ring, [TF-80SC / TF81SC] 2005-Up	1	
910	K106895	Servo Assembly, [TF-81SC] (B1-Brake) (3-Groove Pin) 2005-Up	1	
911	106281	Spring, [TF-81SC] (B1-Brake Servo) (2.885” Long) (1.030”OD) 2005-Up	1	
912	106628	Piston, [TF-81SC] (B1-Brake Servo) (2.080”OD) (3-Groove Pin) (4.087” Long) 2005-Up	1	
914	106629	Cover, [TF-81SC] (B1-Brake Servo) (2.415”OD) (2.085”ID) (1.960” Tall) 2005-Up	1	
915	106689	Band Anchor, [TF-81SC] (Screw-In) (1.440” Long) 2005-Up	1	
962	106762	Piston, [TF-81SC] (1-2-3-4 Clutch) (.815” Thick) (6-1/8”OD) (2.085”ID) 2005-Up	1	
964	106763	Piston, [TF-81SC] (4-5-6 Clutch) (Bonded) (1.065” Tall) (6-3/16”OD) (2.250”ID) 2005-Up	1	
965	106764	Piston, [TF-81SC] (3-5 Reverse Clutch) (.720” Thick) (2.385”ID) (Steel) (12-Outer Lugs) 2005-Up	1	
967	106765	Piston, [TF-81SC] (Low / Reverse Clutch) (Aluminum) (1.850” Thick) (5.480”ID) 2005-Up	1	
972	106872	Spring W/Retainer, [TF-81SC] (1-2-3-4 Clutch Return) (4.060”OD) (3.065”ID) (22-Springs) 2005-Up	1	
972-1	106862	Retainer, [TF-81SC] (1-2-3-4 Clutch Return Spring) (4.060”OD) (3.155”ID) (22-Holes) 2005-Up	1	
974	106873	Spring W/Retainer, [TF-81SC] (4-5-6 Clutch Return) (4.330”OD) (3.495”ID) (28-Springs) 2005-Up	1	
974-1	106863	Retainer, [TF-81SC] (4-5-6 Clutch Return Spring) (4.195”OD) (3.595”ID) (28-Holes) 2005-Up	1	
975	106874	Spring/Retainer, [TF-81SC] (3-5 Reverse Clutch Return) (28-Springs) (4.155”OD) (3.300”ID) 05-Up	1	
975-1	106864	Retainer Plate, [TF-81SC] (3-4 Reverse Clutch Return Spring) (28-Holes) (4.100”OD) (3.380”ID)	1	
977	106875	Spring W/Retainer, [TF-81SC] (Low / Reverse Clutch Return) (.750” Thick) (7-5/8”OD) (6-3/4”ID) (14-Springs)	1	
982	106865	Retainer/Piston, [TF-81SC] (1-2-3-4 Clutch) (Bonded) (.420” Thick) (4.925”OD) (1.905”ID) 2005-Up	1	
984	106866	Retainer/Piston, [TF-81SC] (4-5-6 Clutch Spring) (Bonded) (4.660”OD) (2.215”ID) 2005-Up	1	
985	106867	Retainer/Piston, [TF-81SC] (3-5 Reverse Clutch Spring) (Bonded) (5.050”OD) (2.315”ID) 2005-Up	1	
995	K106678	Park Pawl Assembly, [TF-81SC] (Ford) 2005-Up	1	
999	K106679	Oil Tube Set, [TF-81SC] (2-Tubes) 2005-Up	1	

DACCO

TORQUE CONVERTERS

WWW.DACCOINC.COM



CUSTOMER DRIVEN · QUALITY FOCUSED · EMPLOYEE POWERED

For more than 40 years...

Over 30,000 customers have trusted Dacco...

America's leading remanufacturer of torque converters!

TF-6 / A904

RWD 3 Speed

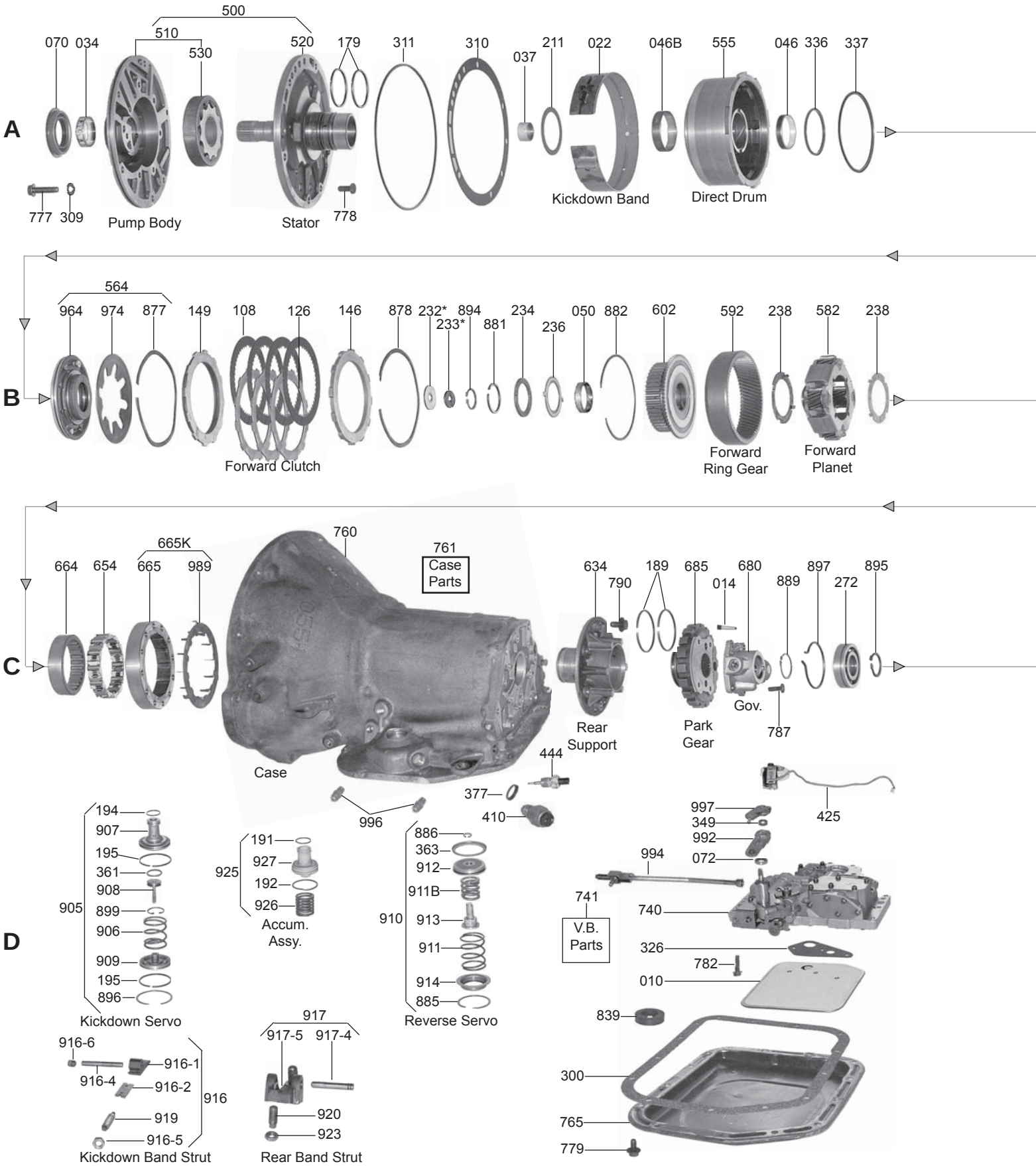

RWD 3 Speed

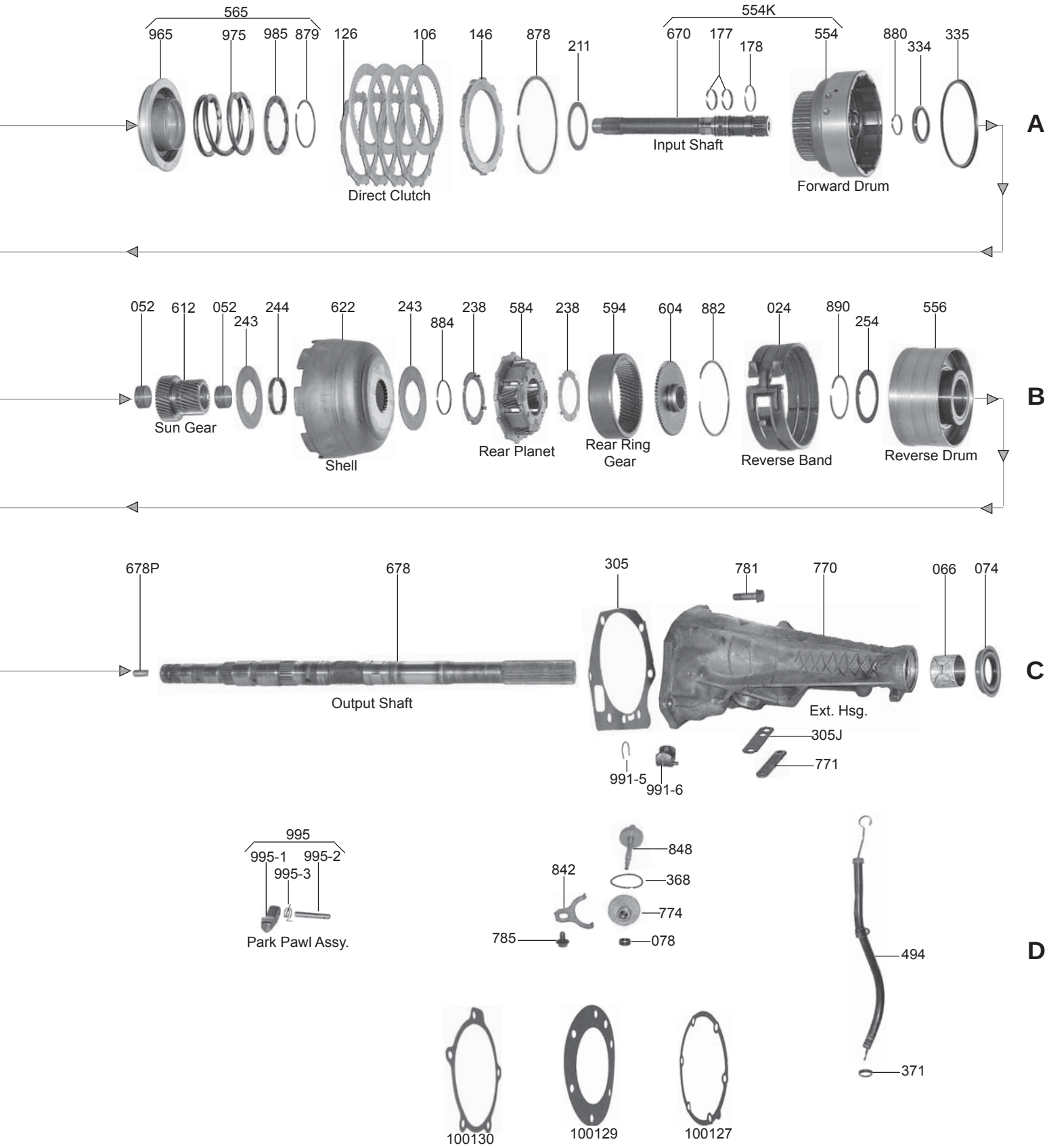
565
965
975
985
879
126
106
146
878
211
554K
670
177
178
554
880
334
335
Direct Clutch
Input Shaft
Forward Drum
A
052
612
052
243
244
622
243
884
238
584
238
594
604
882
024
890
254
556
Sun Gear
Shell
Rear Planet
Rear Ring Gear
Reverse Band
Reverse Drum
B
678P
678
305
781
770
066
074
Output Shaft
Ext. Hsg.
305J
771
991-5
991-6
C
995
995-1
995-2
995-3
Park Pawl Assy.
842
848
368
774
785
078
494
371
100130
100129
100127
D

A500 (40RH/42RH/42RE/44RE)

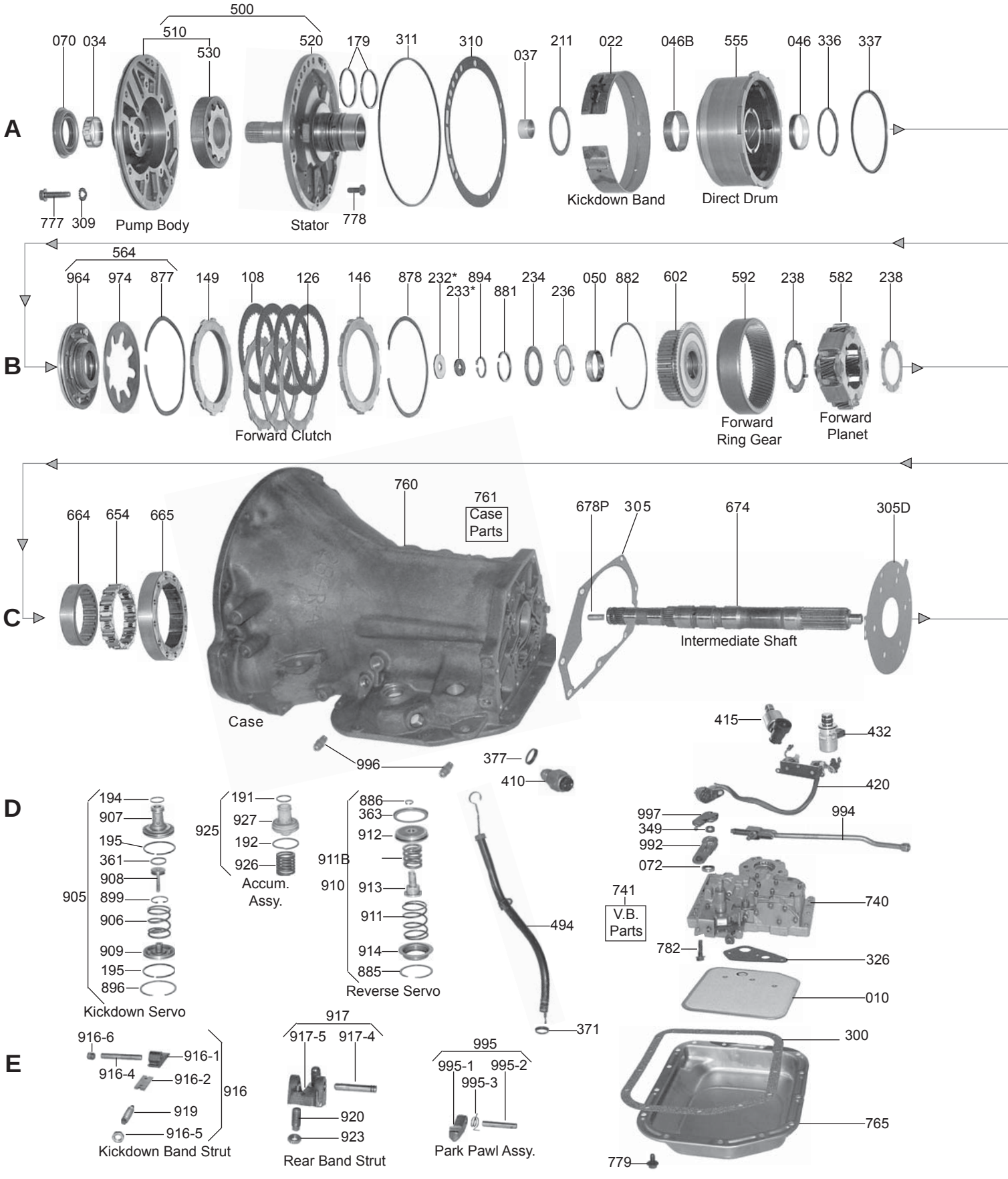

A500 (40RH/42RH/42RE/44RE)

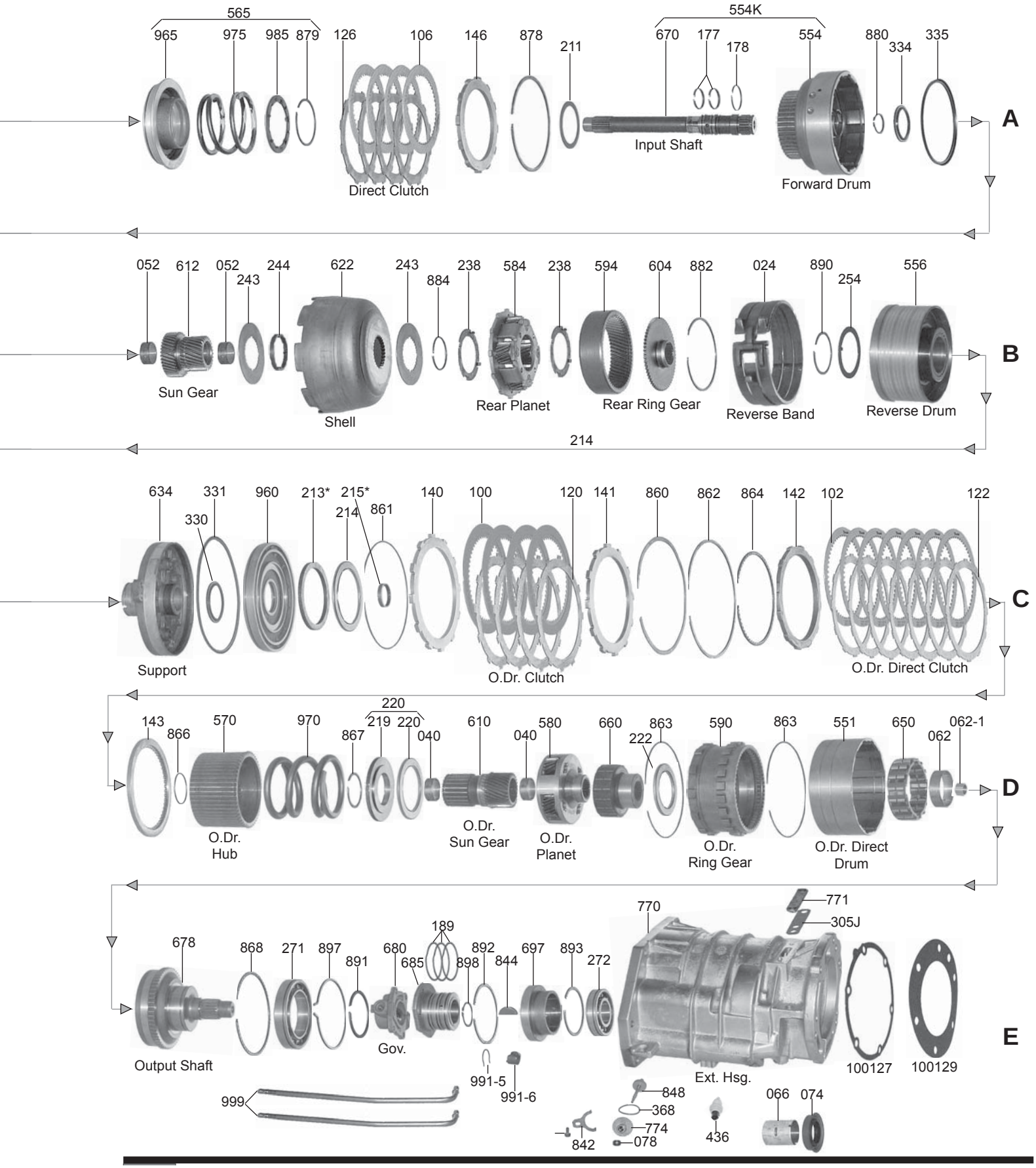

TF-6/A904/A500(40RH/42RH/42RE/44RE)

ILL#	PART#	DESCRIPTION	QTY	REF #
		PAPER & RUBBER KIT		
	K12900G-1	Paper & Rubber Kit, [A904] 1960-71	1	
	K12900H-1	Paper & Rubber Kit, [A904] (*Except Colt, Arrow) 1972-98	1	
	K12900D-1	Paper & Rubber Kit, [A904] (Colt, Arrow) 1974-80	1	
	K12900N-1	Paper & Rubber Kit, [A500 / 42RE / 44RE] 1988-Up	1	
	K12512	Valve Body Gasket Kit, [A500 / 42RE / 44RE] 1989-Up	1	
		OVERHAUL KITS		
	K12900G	Overhaul Kit, [A904] 1960-71	1	
	K12900H	Overhaul Kit, [A904] (*Except Colt, Arrow) 1972-98	1	
	K12900J	Overhaul Kit, [A904] 1999-Up	1	
	K12900D	Overhaul Kit, [A904] (Colt, Arrow) 1974-80	1	
	K12900N	Overhaul Kit, [A500 / 42RE / 44RE] 1988-Up	1	
		MASTER L/STEEL KIT		
	DK1200A-S	Master L/Steels Kit, [A904] 1960-71	1	
	DK1200B-S	Master L/Steels Kit, [A904] (*Except Colt, Arrow) 1972-98	1	
	DK1200J-S	Master L/Steels Kit, [A904] 1999-Up	1	
	DK1200D-S	Master L/Steels Kit, [A904] (Colt, Arrow) 1974-80	1	
	DK1200N-S	Master L/Steels Kit, [A500 / 42RE / 44RE] 1988-Up	1	
	DK1200P-S	Master L/Steels Kit, [A500 / 42RE / 44RE] (With Hi-Energy Frictions) 1998-Up (*Retro to 1988)	1	
		MASTER W/STEEL KIT		
	DK1200A	Master W/Steels Kit, [A904] 1960-71	1	
	DK1200B	Master W/Steels Kit, [A904] (*Except Colt, Arrow) 1972-98	1	
	DK1200J	Master W/Steels Kit, [A904] 1999-Up	1	
	DK1200D	Master W/Steels Kit, [A904] (Colt, Arrow) 1974-80	1	
	DK1200N	Master W/Steels Kit, [A500 / 42RE / 44RE] 1988-Up	1	
	DK1200P	Master W/Steels Kit, [A500 / 42RE / 44RE] (With Hi-Energy Frictions) 1988-99 (*Retro to 1988)	1	
	DK1200Q	Master W/Steels Kit, [42RE / 44RE] (With Hi-Energy Frictions) 2000-Up	1	
		FILTER		
010	12776A	Filter, [A904] (Small Dacron) (2-Hole) 1960-Up	1	3621456
010	12776B	Filter, [A904] (Small Brass) 1960-Up	1	3410253
010	12776C	Filter, [A904 / A500] (Large Dacron) 1966-Up	1	3515996
010	12776D	Filter, [A904 / A500] (Large Brass) 1966-Up	1	
010	12776F	Filter, [A500 / 42RE / 44RE] (Metal & Plastic) 1998-Up	1	52118789
		FILTER KIT		
	K12776A-6	Filter Kit, [A904] (Small Dacron Filter)	1	
	K12776B-6	Filter Kit, [A904] (Small Brass Filter)	1	
	FK12776C-6	Filter Kit, [A904 / A500] (Large Dacron Filter) 1960-97	1	
	FK12776D-6	Filter Kit, [A904] (Large Brass Filter)	1	
	FK12776C68	Filter Kit, [A904 / A500 / A727 / A518] (Combo Large Dacron Filter) 1960-97	1	
	FK12776E	Filter Kit, [A904] (Colt, Arrow) (Large Dacron Filter) 1974-80	1	

	FK12776F-6	Filter Kit, [A500 / 42RE / 44RE] 1998-Up (Metal & Plastic)	1	
	FK12776F68	Filter Kit, [A500 / A518] (Combo) 1998-Up (Metal & Plastic)	1	
		MISC. FILTERS		
014	12777	Filter, [A904] (Governor)	1	3743519
	32777	Screen, [A904 / A500] (Valve Body Regulator Feed Line)	1	
	12784	Orifice Screen, [A500 / 42RE / 44RE] (Overdrive Piston Retainer)	1	4412583
		BANDS		
022	12905C	Band, [A904] (Kickdown Rigid) (1.750" Wide) (Offset) (360 Engine)	1	3681921
022	12905F	Band, [A904] (Kickdown Flex) (1.375" Wide) 1960-Up	1	4419646
022	12905	Band, [A904] (Kickdown Rigid) (1.375" Wide) 1961-78	1	2204792
022	12905K	Band, [A904 / A500 / 42RE / 44RE] (Kickdown Flex) (1.375" Wide) (Kevlar Lining)	1	4419646
022	12905F	Band, [A500 / 42RE / 44RE] (Kickdown Flex) (1.375" Wide) 1960-Up	1	4531221
022	A12905H	Band, [A904 / A500 / 42RE / 44RE] (Kickdown Semi-Rigid) (1.610" Wide) 1992-99	1	4617849
022	B12905H	Band, [A904 / A500 / 42RE / 44RE] (Kickdown Flex) (1.610" Wide) 1992-Up	1	
024	12820	Band, [A904] (Reverse Rigid) 1960-Up	1	4443187
024	12820A	Band, [A904 / A500 / 42RE / 44RE] (Reverse Double Wrap) 1968-Up	1	4443184
		BUSHINGS		
	K12952	Bushing Kit, [A904] 1960-93	1	
	K12952D	Bushing Kit, [A904] 1994-Up	1	
	K12952N	Bushing Kit, [A500 / 42RE / 44RE] L1988-93	1	
	K12952P	Bushing Kit, [A500 / 42RE / 44RE] 1999-Up	1	
034	12502	Bushing, [A904 / A500 / 42RE / 44RE] (Pump Body) (Babbit) 1960-Up	1	2204953
034	12502A	Bushing, [A904 / A500 / 42RE / 44RE] (Pump Body) (Bronze) 1960-Up	1	2466796
037	12503	Bushing, [A904] (Stator) 1960-67 (*Not in Kit)	1	
037	12503B	Bushing, [A904] (Stator) 1968-77	1	2801728
037	12503C	Bushing, [A904 / A500 / 42RE / 44RE] (Stator) 1978-Up	1	4058635
040	12511	Bushing, [A500 / 42RE / 44RE] (Overdrive Sun Gear) (Rear) 1990-Up (No Flange) (1.42"OD) (*Also Front Overdrive Sun Gear 1990-93)	2	4461025
040	12511A	Bushing, [A500 / 42RE / 44RE] (Overdrive Sun Gear) (Front) (With Flange) (1.42"OD) 1994-E99	1	
040	12511B	Bushing, [A500 / 42RE / 44RE] (Overdrive Sun Gear) (Front) (No Flange) (Thick Wall) (1.50"OD) 1999-Up	1	
046	12505A	Bushing, [A904 / A500 / 42RE / 44RE] (Direct Drum) (Rear) 1960-E92	1	2801727
046B	12506	Bushing, [A904 / A500 / 42RE / 44RE] (Direct Drum) (Front) L1992-Up	1	4617157
046	12505B	Bushing, [A904 / A500 / 42RE / 44RE] (Direct Drum) (Rear) L1992-Up	1	4617159
050	12508	Bushing, [A904 / A500 / 42RE / 44RE] (Front Gear Hub) 1976-Up	1	3681967
052	12507	Bushing, [A904 / A500 / 42RE / 44RE] (Sun Gear) 1960-Up	2	1942436
062	12509	Bushing, [A500 / 42RE / 44RE] (Output Shaft to Overdrive Sprag Race) (2.144"ID) 1989-Up	1	4461006
062-1	12510	Bushing, [A500 / 42RE / 44RE] (Output Shaft to Intermediate Shaft) (.605"ID) 1989-Up	1	4461007
066	12501	Bushing, [A904] (Extension Housing) 1960-65 (*Not in Kit)	1	2124607
066	12501A	Bushing, [A904] (Extension Housing) 1966-Up	1	2538525
066	6023	Bushing, [A500 / 42RE / 44RE] (Extension Housing) 1988-Up (1.690"ID) (Bronze)	1	
066	6023T	Bushing, [A500 / 42RE / 44RE] (Extension Housing) 1988-Up (1.690"ID) (Teflon Coated)	1	
		METAL CLAD SEALS		
070	12575	Seal, [A904 / A500 / 42RE / 44RE] (Front) (With Flange) 1960-Up	1	4269057
070	A12575	Seal, [A904 / A500 / 42RE / 44RE] (Front) (Without Flange) 1960-Up	1	
072	22574	Seal, [A904 / A500 / 42RE / 44RE] (Manual Shaft) (1/4" Thick) 1960-Up	1	

TF-6/A904/ A500(40RH/42RH/42RE/44RE)

072	22575	Seal, [A904 / A500 / 42RE / 44RE] (Manual Shaft) (3/8" Thick) (Heavy Duty) 1960-Up	1	
074	12925	Seal, [A904] (Rear) (1.692"OD) (With Bolt on Flange) (*Not in Kits) 1960-64	1	
074	12925A	Seal, [A904] (Rear) 1965	1	
074	12925B	Seal, [A904] (Rear) (With Boot) 1966-72	1	2400163
074	12925D	Seal, [A904] (Rear) (With Boot) 1973-Up	1	3515384
074	12925E	Seal, [A904] (Rear) (Without Boot) 1973-Up	1	
074	12925C	Seal, [A904] (Rear) (Without Boot) 1966-72	1	
074	12925T	Seal, [A904 / A500 / 42RE / 44RE] (Extension Housing) (4x4) (2.568"OD)	1	
074	12925M	Seal, [A904] (Extension Housing) (Mitsubishi, Dodge, D-50)	1	
074	34743C	Seal, [A500 / 42RE / 44RE] (Rear) (Without Boot) 1988-Up	1	
074	16695C	Seal, [A500 / 42RE / 44RE] (Rear) (With Boot) 1988-Up	1	
078	3991A	Seal, [A904] (Speed-O Shaft With Spring)	1	25519078
		FRICTION CLUTCH		
100	12845	Friction, [A500 / 42RE / 44RE] (Overdrive Brake Clutch) (.087") (Flat) 1988-Up	2-4	4461045
100	12845A	Friction, [A500 / 42RE / 44RE] (Overdrive Brake Clutch) (.087") (Waved) 1990-Up (Hi-Energy) (*Retros Early)	4-5	4461181
100	12845HP	Friction, [A500 / 42RE / 44RE] (Overdrive Brake Clutch) (.087") (Hi-Performance Red) 1988-Up	4-5	
102	12842	Friction, [A500 / 42RE / 44RE] (Overdrive Direct Clutch) (.063") 1988-Up	6-8	4461042
102	12842HP	Friction, [A500 / 42RE / 44RE] (Overdrive Direct Clutch) (.063") (Hi-Performance Red) 1988-Up	6-8	
106	12750A	Friction, [A904 / A500 / 42RE / 44RE] (Front) (Direct Clutch) (.086") (Waffle) 1960-Up	3-5	4329805
106	12750B	Friction, [A904 / A500/ 42RE / 44RE] (Front) (Direct Clutch) (.086") (Hi-Energy) (Kevlar) 1960-Up	3-5	
106	12750AHP	Friction, [A904 / A500 / 42RE / 44RE] (Front) (Direct Clutch) (.086") (Hi-Performance Red) 1960-Up	3-5	
106	K12750AHP	Friction Kit, [A904 / A500 / 42RE / 44RE] (Front) (Direct Clutch) (.086") (4 per Kit) (Hi-Performance Red)	1	
108	12760B	Friction, [A904 / A500 / 42RE / 44RE] (Rear) (Forward Clutch) (.061") (Smooth) 1960-Up	3-4	3780285
108	12760D	Friction, [A904 / A500 / 42RE / 44RE] (Rear) (Forward Clutch) (.061") (Hi-Energy)	3-4	
108	12760BHP	Friction, [A904 / A500 / 42RE / 44RE] (Rear) (Forward Clutch) (061") (Hi-Performance Red) 1960-Up	3-4	
108	K12760BHP	Friction Kit, [A904 / A500 / 42RE / 44RE] (Rear) (Forward Clutch) (.061") (4 per Kit) (Hi-Performance Red)	1	
	K12100B	Friction Module, [A904] 1960-Up	1	
	K12100BHP	Friction Module, [A904] (Hi-Performance Red) 1960-Up	1	
	K12100N	Friction Module, [A500 / 42RE / 44RE] 1988-Up	1	
	K12100NHP	Friction Module, [A500 / 42RE / 44RE] (Hi-Performance Red) 1988-Up	1	
	K12100P	Friction Module, [A500 / 42RE / 44RE] (Hi-Energy) 1988-Up	1	
		STEEL CLUTCH		
120	12847	Steel, [A500 / 42RE / 44RE] (Overdrive Brake Clutch) (.068") 1988-Up	2-3	4461047
122	12854	Steel, [A500 / 42RE / 44RE] (Overdrive Direct Clutch) (.069") 1988-Up **(*Use With 12569)**	5-7	4461054
122	22854A	Steel, [A500 / 42RE / 44RE] (Overdrive Direct Clutch) (.054") 1996-Up **(*Use With 12569A)**	5-9	
126	12751	Steel, [A904 / A500 / 42RE / 44RE] (Rear) (Forward) / (Front) (Direct Clutch) (.068") 60-Up	7-9	1942403
126	12751K	Steel, [A904 / A500] (Rear) (Forward) / (Front) (Direct Clutch) (.068") 1960-Up (Kolene)	7-9	
126	12751A	Steel, [A904 / A500 / 42RE / 44RE] (Jeep) (Front) (Direct Clutch) (.085") 1999-Up (With 2-"V" Notched Teeth)	4	
126	12751X	Steel, [A904 / A500 / 42RE / 44RE] (Rear) (Forward) / (Front) (Direct Clutch) (.088") (Oversized) 1960-Up	AR	

	K12110B	Steel Module, [A904]	1	
	K12110BK	Steel Module, [A904] (Kolene)	1	
	K12110N	Steel Module, [A500 / 42RE / 44RE] 1988-99	1	
	K12110Q	Steel Module, [A500 / 42RE / 44RE] 2000-Up	1	
	K12110NK	Steel Module, [A500 / 42RE / 44RE] (Kolene) 1988-Up	1	
		CLUTCH PRESSURE PLATES		
140	12566	Pressure Plate, [A500] (Overdrive Clutch) (.373") (Front) 1988-92 (*Use 12567 for 1993-Up)	1	4461048
141	12567	Pressure Plate, [A500 / 42RE / 44RE] (Overdrive Clutch) (.216") (Rear) 1988-99 (*Also (Overdrive Clutch) (Front) 1993-99)	1	4461033
142	12569	Pressure Plate, [A500 / 42RE / 44RE] (Overdrive Direct Clutch) (Front) (.212")	1	4461031
142	12569A	Pressure Plate, [A500 / 42RE / 44RE] (Overdrive Direct Clutch) (Front) (.085")	1	
143	12568	Pressure Plate, [A500 / 42RE / 44RE] (Overdrive Direct Clutch) (Rear) (.215") (*No External Teeth)	1	4461030
146	12564	Pressure Plate, [A904 / A500 / 42RE / 44RE] (Forward / Direct Clutch) (Flat)	1	4617176
146	12564Q	Pressure Plate, [A904 / A500 / 42RE / 44RE] (Direct Clutch) (.216") (*With 2 Missing Teeth) 1999-Up	1	
149	12565	Pressure Plate, [A904 / A500 / 42RE / 44RE] (Forward Clutch) (Beveled)	1	2466281
		VALVE BODY KITS		
	K22908BS	Valve Body Kit, [A904] 1960-Up	1	Superior
	K22908B	Valve Body Kit, [A904] (No Yo-Yo) 1960-Up	1	Transgo
	K22908NS	Valve Body Kit, [A500 / 42RE / 44RE] (Gas / Diesel) 1989-98	1	Superior
	K22908N	Valve Body Kit, [A500 / 42RE / 44RE] (JR.) (Gas Only*) 1989-Up	1	Transgo
	K22908PS	Valve Body Kit, [A500 / 42RE / 44RE] (Gas / Diesel) 1999-03	1	Superior
	TF-1	Reprogramming Kit, [A904] (Heavy Duty & Hi-Performance)	1	Transgo
	TFOD-HD2	Reprogramming Kit, [A500 / 42RE / 44RE] (Heavy Duty & Hi-Performance)	1	Transgo
	TF-2	Reprogramming Kit, [A904] (Full Race)	1	Transgo
	TF-3	Reprogramming Kit, [A904] (Manual Shift)	1	Transgo
	TFOD-3	Reprogramming Kit, [A500 / 42RE / 44RE] (Manual Shift)	1	Transgo
		OIL SEALING RINGS		
	K12950	Ring Kit, [A904] (Complete) 1960-70	1	
	K12950C	Ring Kit, [A904] (Short) 1960-Up	1	
	K12950A	Ring Kit, [A904] (Complete) 1960-Up	1	
	K12950AT	Ring Kit, [A904] (Complete) (Teflon) 1967-Up	1	
	K12950D	Ring Kit, [A904] (Colt) 1974-80	1	
	K12950L	Ring Kit, [A500 / 42RE / 44RE] 1988-Up	1	
	K12950LT	Ring Kit, [A500 / 42RE / 44RE] (Teflon) 1988-Up	1	
177	12853M	Ring, [A904] (Input Shaft) (Butt Joint) (1.062"OD) (Metal) 1960-67	2	1941831
177	12853L	Ring, [A904 / A500 / 42RE / 44RE] (Input Shaft) (Lock Joint) (1.062"OD) (Metal) 1968-Up	1-2	1401221
177	12853N	Ring, [A904 / A500 / 42RE / 44RE] (Input Shaft) (1.062"OD) (Teflon) 1968-Up	1-2	4269592
178	2823K	Ring, [A904] (Rear Clutch Drum) (Forward) (1.500"OD) (Metal) 1968-77	1	1323593
178	12855	Ring, [A904 / A500 / 42RE / 44RE] (Rear Clutch Drum) (Forward) (1.560"OD) (Metal) 78-Up	1	4028333
179	12600	Ring, [A500 / 42RE / 44RE] (Stator Support) (2.062"OD) (Metal) 1988-Up	2	1942389
179	12600A	Ring, [A500 / 42RE / 44RE] (Stator Support) (2.062"OD) (Metal) (Seal Plated) 1988-Up	2	4471874
189	12850	Ring, [A904] (Governor) (2.250"OD) (Butt Joint) (Metal) 1962-Up	2-3	1942109
189	12850A	Ring, [A904] (Governor) (2.250"OD) (Lock Joint) (Metal) 1962-Up	2-3	2892358

TF-6/A904/ A500(40RH/42RH/42RE/44RE)

189	12811	Ring, [A500 / 42RE / 44RE] (Governor) (Metal) 1989-Up	2-3	
191	12853L	Ring, [A904] (Accumulator Piston) (Small) (1.062”OD) 1960-86	1	1401221
191	12853T	Ring, [A904 / A500 / 42RE / 44RE] (Accumulator Piston) (Small) (Teflon) 1987-Up	1	3743010
	12860T	Ring, [A500 / 42RE / 44RE] (3-4 Accumulator Piston) (Small) (In Valve Body) 1989-Up	1	
192	12770	Ring, [A904 / A500 / 42RE / 44RE] (Accumulator Piston) (Large) (2.00”OD) (Metal)	1	1315158
192	12770T	Ring, [A904 / A500 / 42RE / 44RE] (Accumulator Piston) (Large) (2.00”OD) (Teflon)	1	
	12861T	Ring, [A500 / 42RE / 44RE] (3-4 Accumulator Piston) (Large) (In Valve Body) 1989-Up	1	3743013
194	12851	Ring, [A904] (Kickdown Servo Piston) (1.00”OD) (Metal) (8 Cyl) 1971-Up	1	3410374
194	2716A	Ring, [A904] (Kickdown Servo Piston) (1.25”OD) (Metal) (6 Cyl) 1960-Up	1	1672287
195	12852	Ring, [A904] (Kickdown Servo Piston & Cover) (Large 2.375”OD) (Metal) (8 Cyl) 1971-Up	2	3410372
195	2936B	Ring, [A904] (Kickdown Servo Piston & Cover) (Large 2.125”OD) (Metal) (6 Cyl) 1960-Up	2	1636470
195	12852T	Ring, [A500 / 42RE / 44RE] (Kickdown Servo Piston & Cover) (Large 2.560”OD) 1989-Up	2	4295966
		WASHERS & BEARINGS		
	K12951A	Washer Kit, [A904] 1968-74	1	
	K12951B	Washer Kit, [A904] (With Selectives) (12-Washers) 1974-Up	1	
	K12951AA	Washer Kit, [A904] 1960-67	1	
	K12951E	Washer Kit, [A500 / 42RE / 44RE] (With Selectives) 1988-Up	1	
	K22906	Bearing Kit, [A500 / 42RE / 44RE] 1989-Up	1	Torrington
211	12606	Washer, [A904] (Direct Drum) (Front & Rear) (Fiber) (.042”) 1960-70	2	
211	12606A	Washer, [A904 / A500 / 42RE / 44RE] (Direct Drum) (Front & Rear) (Fiber) (.062”) 1971-Up	2	3410572
213	22414A	Race, [A500 / 42RE / 44RE] (Overdrive Piston to Hub) (.124”) 1988-Up	1	4431585
213	22414B	Race, [A500 / 42RE / 44RE] (Overdrive Piston to Hub) (.139”) 1988-Up	1	4431731
213	22414C	Race, [A500 / 42RE / 44RE] (Overdrive Piston to Hub) (.154”) 1988-Up	1	4431586
213	22414D	Race, [A500 / 42RE / 44RE] (Overdrive Piston to Hub) (.169”) 1988-Up	1	4431732
213	22414E	Race, [A500 / 42RE / 44RE] (Overdrive Piston to Hub) (.184”) 1988-Up	1	4431587
213	22414F	Race, [A500 / 42RE / 44RE] (Overdrive Piston to Hub) (.199”) 1988-Up	1	4431733
213	22414G	Race, [A500 / 42RE / 44RE] (Overdrive Piston to Hub) (.214”) 1988-Up	1	4431588
213	22414H	Race, [A500 / 42RE / 44RE] (Overdrive Piston to Hub) (.229”) 1988-Up	1	4431734
213	22414J	Race, [A500 / 42RE / 44RE] (Overdrive Piston to Hub) (.244”) 1988-Up	1	4431590
213	12783-01K	Race Kit, [A500 / 42RE / 44RE] (Overdrive Piston to Hub) (Contains: 1-Race & 3-Shims)	1	Sonnax
214	12739	Bearing, [A500 / 42RE / 44RE] (Overdrive Piston to Hub) 1988-Up	1	4446724
215	12737	Spacer, [A500 / 42RE / 44RE] (Intermediate Shaft to Overdrive Planet) (.158”) 1988-Up	1	4431916
215	12737A	Spacer, [A500 / 42RE / 44RE] (Intermediate Shaft to Overdrive Planet) (.175”) 1988-Up	1	4431917
215	12737B	Spacer, [A500 / 42RE / 44RE] (Intermediate Shaft to Overdrive Planet) (.193”) 1988-Up	1	4431918
215	12737C	Spacer, [A500 / 42RE / 44RE] (Intermediate Shaft to Overdrive Planet) (.211”) 1988-Up	1	4431919
220	12860-01	Bearing & Race, [A500 / 42RE / 44RE] (Overdrive Planet to Hub) (*Updated)	1	Sonnax
222	12740	Bearing, [A500 / 42RE / 44RE] (Overdrive Inner Sprag Race to Output Shaft) (3.210”OD)	1	4461014
232	12706	Race, [A904] (Output Shaft Cup) 1979-89	1	4058982
232	12706A	Washer, [A904 / A500 / 42RE / 44RE] (Output Shaft Plate Cup Race) 1990-Up	1	4505188
233	12705J	Washer, [A904 / A500] (Output Shaft) (3-Outer Tabs) (.052”) 1990-Up	1	4505185
233	12705K	Washer, [A904 / A500] (Output Shaft) (3-Outer Tabs) (.068”) 1990-Up	1	4505186
233	12705L	Washer, [A904 / A500] (Output Shaft) (3-Outer Tabs) (.083”) 1990-Up	1	4505187
232	K055	Shim Kit, [A500] (Goes Under # 232 Washer) (3ea- .015” & .025” Shims)	1	Superior
233	12705	Washer, [A904] (Output Shaft) (.052”) (Fiber) (Natural) 1960-75	1	2538669
233	12705A	Washer, [A904] (Output Shaft) (.068”) (Fiber) (Red) 1960-75	1	2466169
233	12705B	Washer, [A904] (Output Shaft) (.083”) (Fiber) (Black) 1960-76	1	2538671
233	12705C	Washer, [A904] (Output Shaft) (.052”) (1-Tab) 1976-78	1	3878777
233	12705D	Washer, [A904] (Output Shaft) (.068”) (1-Tab) 1976-78	1	3878778

233	12705E	Washer, [A904] (Output Shaft) (.083") (1-Tab) 1976-78	1	3878779
233	12705F	Washer, [A904 / A500] (Output Shaft) (.052") (2-Inner Tabs) (Grey) 1979-89	1	4269196
233	12705G	Washer, [A904 / A500] (Output Shaft) (.068") (2-Inner Tabs) (Red / Purple) 1979-89	1	4269197
233	12705H	Washer, [A904 / A500] (Output Shaft) (.083") (2-Inner Tabs) (Green) 1979-89	1	4269198
234	12620	Washer, [A904] (Forward Drum to Hub) (Without Tab) 1960-67	1	1942447
234	12620A	Washer, [A904] (Forward Drum to Hub) (1-5/8"ID) 1968-74	1	2538696
234	12620B	Washer, [A904 / A500 / 42RE / 44RE] (Forward Drum to Hub) (1-Tab) 1975-Up	1	3681969
236	12620R	Race, [A904 / A500 / 42RE / 44RE] (Forward Drum Washer to Hub) (2-Tab)	1	4617775
238	12780B	Washer, [A904] (Front & Rear Planet) (3-Tab) (.060") 1960-67	2	2400528
238	12780E	Washer, [A904] (Front & Rear Planet) (3-Tab) (.050") 1968-74	2	2801356
238	12780F	Washer, [A904] (3 Gear Front & Rear Planet) (Both Sides) (3-Outer Tangs) (6 Cyl) 1974-Up	4	3743027
238	12780G	Washer, [A904 / A500 / 42RE / 44RE] (4 Gear Front & Rear Planet) (4-Outer Tangs) (2") 1974-Up	4	3681935
238	12780J	Washer, [A904 / A500 / 42RE / 44RE] (4 Gear Large Front Planet) (Both Sides) (4-Inner Tangs) (2.625") 1980-Up	2	4130518
238	12780D	Washer, [A904] (4 Gear Front & Rear Planet) (Aluminum Planet) (1-Side) (4-Tangs) 1968-74	2	2538515
	12780-Z	Shim Kit, [A904 / A500] (Goes Under # 238) (10 Per Kit)	1	Sonnax
243	12659	Race, [A904 / A500 / 42RE / 44RE] (Driving Shell) (2.690"OD) (28 Teeth) 1960-Up	1	3681959
243	12659A	Race, [A904] (Driving Shell) (3.440"OD) (38 Teeth) 1979-Up	1	4471566
244	12736	Spacer, [A904 / A500 / 42RE / 44RE] (Sun Gear Bowl) (For Large Planet)	1	4130736
254	12735	Washer, [A500 / 42RE / 44RE] (Rear Drum to Snap Ring) (1-Tab) 1988-Up	1	4431435
271	22976A	Ball Bearing, [A500 / 42RE / 44RE] (Output Shaft) (Front) (2.750"ID) (With Snap Ring Groove)	1	4461008
272	12976	Ball Bearing, [A904] (Output Shaf) (Rear) (1.165"ID) (With Snap Ring Groove)	1	3410465
272	22976	Ball Bearing, [A904] (Output Shaft) (Rear) (1.230"ID) (With Snap Ring Groove) 1966-72	1	
272	22796B	Bearing, [A500 / 42RE / 44RE] (Output Shaft) (Rear) (1.375"ID) (A904 / 4WD)	1	2466224
		GASKETS & RUBBER COMPONENTS		
300	3795	Gasket, [A904 / A500 / 42RE / 44RE] (Pan) 1960-Up	1	4295875
300	3795A	Gasket, [A904] (Small Pan) (Colt / Arrow) 1974-80	1	3681438
305	3854	Gasket, [A904] (Extension Housing) 1960-65	1	
305	13253	Gasket, [A904] (Extension Housing) 1966-Up	1	2466954
305	12145	Gasket, [A500 / 42RE / 44RE] (Extension Housing) 1990-Up	1	4531192
305-D	12146	Gasket, [A500 / 42RE / 44RE] (Overdrive Piston Retainer to Case) 1990-Up	1	4531190
305-J	13254	Gasket, [A904 / A500 / 42RE / 44RE] (Output Shaft Bearing Cover) 1966-Up	1	2666049
310	3572	Gasket, [A904 / A500 / 42RE / 44RE] (Front Pump) (14-Hole) (*Retro Fits Early) 1960-Up	1	52118266
311	3847	O-Ring, [A904 / A500 / 42RE / 44RE] (Front Pump) 1961-Up	1	2204709
325	12111	Gasket, [A500 / 42RE / 44RE] (Governor Pressure Solenoid) 1988-Up	1	4446194
326	3969	Gasket, [A904 / A500] (Filter) (For Brass Filter)	1	2205202
330	12198	Lip Seal, [A500 / 42RE / 44RE] (Overdrive Clutch Piston) (Inner)	1	4431697
331	12199	Lip Seal, [A500 / 42RE / 44RE] (Overdrive Clutch Piston) (Outer)	1	4431696
334	13289	Lip Seal, [A904 / A500 / 42RE / 44RE] (Forward Clutch Piston) (Inner) 1968-Up	1	2538510
334	3578	Lip Seal, [A904] (Forward Clutch Piston) (Inner) 1960-67	1	2125187
335	3576	Lip Seal, [A904] (Forward Clutch Piston) (Outer) 1960-67	1	1942397
335	13311	Lip Seal, [A904 / A500 / 42RE / 44RE] (Forward Clutch Piston) (Outer) 1968-Up	1	2538695
336	13307	Lip Seal, [A904 / A500 / 42RE / 44RE] (Direct Clutch Piston) (Inner) 1972-Up	1	3515176
336	3575	Lip Seal, [A904] (Direct Clutch Piston) (Inner) 1960-71	1	1942396
336	13307A	Lip Seal, [A904 / A500 / 42RE / 44RE] (Direct Clutch Piston) (Inner) (VAMAC) (*Updated Wider Base) 1972-Up	1	
337	13308	Lip Seal, [A904 / A500 / 42RE / 44RE] (Direct Piston) (Outer) 1972-E99	1	4085487
337	3576	Lip Seal, [A904] (Direct Clutch Piston) (Outer) 1960-71	2	1942397

TF-6/A904/ A500(40RH/42RH/42RE/44RE)

337	13308A	Lip Seal, [A904 / A500 / 42RE / 44RE] (Direct Clutch Piston) (Outer) L1999-Up (*Seal In Drum and Rides on Piston Overdrive)	1	4058487AB
347	12448	O-Ring, [A904 / A500] (Electric Connector) (15/16" Connector)	2	6033448
347	12448A	O-Ring, [A500] (Electric Connector) (1-1/16" Connector)	2	6034748
349	13207	Seal, [A904 / A500] (Throttle Lever Shaft) 1960-Up	1	2466548
	K12903D	D-Ring, [A500 / 42RE / 44RE] (Accumulator) (3-D-Rings)	1	
363	13208	Lip Seal, [A904 / A500 / 42RE / 44RE] (Reverse Servo Piston Seal) 1965-Up	1	2464462
363	13208V	Lip Seal, [A500 / 42RE / 44RE] (Reverse Servo) 1989-Up (Viton)	1	4202864
363	13209	Lip Seal, [A904] (Reverse Servo Piston Seal) (Colt / Arrow) 1974-80	1	4269736
368	3547A	O-Ring, [A904 / A500] (Speed-O Housing) (Red) 1966-Up	1	6031370
368	3547	O-Ring, [A904] (Speed-O Adapter) 1960-65	1	1363951
078	3991	Lip Seal, [A904] (Speed-O Shaft to Housing) 1966-76	1	
078	3991A	Lip Seal, [A904] (Speed-O Gear Cable) (Plastic Housing) 1977-89	1	
371	3292A	Boot, [A500 / 42RE / 44RE] (Filler Tube) 1997-Up	1	52118629
371	3291	O-Ring, [A904 / A500] (Filler Tube) 1960-96	1	6264902
377	3979	O-Ring, [A904] (Neutral Switch) 1960-65	1	1316849
377	13267	Gasket/Washer, [A904 / A500 / 42RE / 44RE] (Neutral Safety Switch) 1965-Up	1	2408143
		TECHNICAL MANUALS		
	TMA727	Technical Manual, [A904]	1	ATSG
	TMA500	Technical Manual, [A500]	1	ATSG
	TM42RE	Technical Manual, [A500 / 42RE / 44RE]	1	ATSG
		ELECTRICAL COMPONENTS		
410	K2627B	Neutral Switch, [A904] (3-Prong) (Long) 1969-Up	1	2932820
410	K2627C	Neutral Switch, [A904 / A500 / 42RE / 44RE] (3-Prong) (Short) (Push-on Connector) 1969-95	1	4057750
410	K2627D	Neutral Switch, [A904 / A500 / 42RE / 44RE] (3-Prong) (Extended) 1996-2000 (Short) (Clip-on Connector)	1	
410	K2627E	Neutral Switch, [A500 / 42RE / 44RE] (Push-In) (5-Prong) (Cast # 56045489AC) (Square Body) (2-Bolt) 2001-Up	1	
415	**Discontinued**	Sensor, [A500] (Governor Pressure) (3-Pin) 1993-95 (Transducer)	1	56027562
415	22955	Sensor, [A500 / 42RE / 44RE] (Governor Pressure) (4-Pin Round Connector) (Transducer) 1996-99	1	56041403AA
415	22955A	Sensor, [A500 / 42RE / 44RE] (Governor Pressure) (4-Blade Rectangle Connector) (Black Plastic) (Transducer) 2000-Up	1	56028196AD
420	22954	Solenoid, [A500] (Overdrive Only*) (Hydraulic Governor) 1989-Up	1	4883714AA
420	12954	Solenoid, [A500] (Overdrive & Lock-Up) (Hydraulic Gonernor) 1989-Up	1	4883715AA
420	**Discontinued**	Solenoid, [A500 / 42RE / 44RE] (Overdrive & Lock-Up) (3-Pin) 1994-95 **(*Replaced By K22954B Kit)**	1	
420	22954B	Solenoid, [A500 / 42RE / 44RE] (Overdrive & Lock-Up) (8-Pin Case Connector) (With 4-Pin Governor Sensor) 1996-99	1	52118500
420	K22954B	Solenoid Kit, [A500 / 42RE / 44RE] (Overdrive & Lock-Up) (8-Pin Case Connector) (With 4- Pin Governor Sensor) (*Retros 3-Pin) 1994-99	1	
420	22954C	Solenoid, [A500 / 42RE / 44RE] (Overdrive & Lock-Up) (8-Pin Case Connector) (4-Blade Governor Sensor) 2000-Up	1	52118500AB
425	12605	Solenoid, [A904] (Lock-Up) (1-Wire) 1986-Up	1	4348719
425	12605A	Solenoid, [A904] (Lock-Up) (2-Wire) 1994-Up	1	52118595
432	22958	Solenoid, [A500 / 42RE / 44RE] (Governor Pressure) 1994-Up	1	4617210
432	22958HD	Solenoid, [42RE / 44RE] (Governor Pressure) 1994-Up (*Borg Warner HD Replacement)	1	
432	TF-GOV-SOL	Repair Kit, [A500] (Governor Pressure Solenoid) 1994-Up (*Fixes 6-Solenoids)	1	Transgo
436	92887	Sensor, [A500 42RE / 44RE] (Output Speed Sensor) (.928"OD Threads)	1	4800879
444	12983	Connector, [A904] (Case) (Pass Through) (1-Wire) L1987-Up	1	

444	12983A	Connector, [A904] (Case) (Pass Through) (2-Wire) 1996-Up	1	
445	K22986	Repair Kit, [A500 / 42RE / 44RE] (External Wire Harness) (8-Pin Connector) (With 8-Crimp Style Connectors) 1993-Up	1	Rostra
	K22987C	Repair Harness, [A904 / A500 / 42RE / 44RE] (NSS) 1969-95 (*Fits K2627C)	1	
	K22987D	Repair Harness, [A904 / A500 / 42RE / 44RE] (NSS) 1996-00 (*Fits K2627D)	1	
	K22987E	Repair Harness, [A500 / 42RE / 44RE] (NSS) 2001-Up (*Fits K2627E)	1	
	4638763	Temperature Switch, [A500] (Screws Into Cooler Line) 1990-93	1	
	33004281	Temperature Switch, [A500 / 42RE / 44RE] (Screws Into Cooler Line)	1	
		MISC. COMPONENTS		
	10000-03K	E-Clip, (Chrysler Shift Linkage) (10 Per Pack)	1	Sonnax
	22800A	Grommet, [A904] (Cross Shaft Linkage) (AMC / Jeep)	1	
	22800	Grommet, [A904] (Cross Shaft Linkage)	1	3467800
	22801	Grommet, [A904] (Manual Lever)	1	3575333
	30135	Hitch Pins, (Chrysler)	1	
		HARD PARTS		
500	12534	Pump, [A904] 1960-67	1	
500	12537	Pump, [A904] (Non Lock-Up) 1968-74	1	
500	12537A	Pump, [A904] (Non Lock-Up) (1-Ring on Input Shaft) 1975-89	1	
500	12540A	Pump, [A904] (Non Lock-Up) (Colt Type) (2-Rings on Input Shaft) 1978-Up	1	
500	12540	Pump, [A904] (Non Lock-Up) (Colt Type) (1-Ring on Input Shaft) 1974-77	1	
500	12538	Pump, [A904 / A500] (Non Lock-Up) (3-1/2” Shaft) (2-Ring on Input Shaft) 1978-Up	1	4778553
500	12539	Pump, [A904 / A500] (Lock-Up) (With 2-Lug Inner Gear) (1-Direct Drum Bushing) 1978-Up	1	
500	12539C	Pump, [A904 / A500 / 42RE / 44RE] (Lock-Up) (With 2-Flats Inner Gear) (1-Direct Drum Bushing) 1990-94	1	
500	12539A	Pump, [A904 / A500 / 42RE / 44RE] (Lock-Up) (With 2-Flats Inner Gear) (2-Direct Drum Bushings) 1990-94	1	
500	12539B	Pump, [A904 / A500 / 42RE / 44RE] (Lock-Up) (With 2-Flats Inner Gear) (2-Direct Drum Bushings) 1995-Up	1	4778552
510	12535	Pump Body W/Gears, [A904] (Non Lock-Up) 1960-77	1	
510	12535A	Pump Body W/Gears, [A904 / A500] (Non Lock-Up & Lock-Up) 1978-Up (2-Lugs on Inner Gear)	1	4130192
510	12535C	Pump Body W/Gears, [A904 / A500 / 42RE / 44RE] (Lock-Up) 1990-94 (With 2-Flats on Inner Pump Gear)	1	
510	12535B	Pump Body W/Gears, [A904 / A500 / 42RE / 44RE] (Lock-Up) (14-Hole Pump Gasket) 1995-Up (2-Flats on Inner Gear)	1	52118267
520	12781E	Stator, [A904] 1960-67	1	
520	12781	Stator, [A904] (Non Lock-Up) (1-Ring on Input Shaft) 1968-77	1	2538409
520	12781C	Stator, [A904] (Non Lock-Up With Bevel) (1-Ring on Input Shaft) 1975-77	1	
520	12781A	Stator, [A904] (Non Lock-Up) (2-Rings on Input Shaft) (2-Ball) 1978-Up	1	4058941
520	12781D	Stator, [A904] (Non Lock-Up) (Colt Type) (1-Ring on Input Shaft) 1974-77	1	
520	12781F	Stator, [A904 / A500] (Non Lock-Up) (904 Colt Type) (2-Ring on Input Shaft) 1978-Up (*Also [A500] D-50 1988-Up) (Stator Shaft is 3-1/2” From Splined End to Flat Surface)	1	
520	12781B	Stator, [A904 / A500] (Lock-Up) (*Fits Direct Drum With 1-Bushing) (3-Ball) 1978-94	1	4058413
520	12781HA	Stator, [A904 / A500 / 42RE / 44RE] (Lock-Up) (*Fits Direct Drum With 2-Bushings) (13-Hole Gasket) 1990-94	1	
520	12781G	Stator, [A904 / A500] (Lock-Up) (904 Colt Type) 1978-Up (*Also [A500] D-50 1988-Up)	1	
520	12781H	Stator, [A904 / A500 / 42RE / 44RE] (Lock-Up) (*Fits Direct Drum With 2-Bushings) (14-Hole Gasket) 1995-Up	1	52118297

TF-6/A904/ A500(40RH/42RH/42RE/44RE)

		PUMP COMPONENTS		
530	K12762	Pump Gears, [A904] (Lock-Up) (.7460" - .7470") 1960-77	1	3621478
530	K12762A	Pump Gears, [A904 / A500] (.7476" - .7486") (With 2-Lugs on Inner Gear) 1978-Up	1	3780238
530	K12672B	Pump Gears, [A904 / A500] (.7487" - .7497") (With 2-Lugs on Inner Gear) 1978-Up	1	
530	K12762C	Pump Gears, [A904 / A500 / 42RE / 44RE] (With 2-Flats on Inner Gears) 1990-Up	1	
		HARD PARTS (Continued)		
551	12640	Drum, [A500] (Overdrive Direct) (6 Clutch) (Gas)	1	4461040
551	12640A	Drum, [A500 / 42RE / 44RE] (Overdrive Direct) (8 Clutch)	1	4461089
554	12119	Drum, [A904] (Forward) (3 Clutch) 1968-77 (1-1/8" Tall Direct Clutch Hub) (1-Ring Drum)	1	
554	12121	Drum, [A904] (Forward) (With 1-Ring) (27-Spline Input Shaft) (4 Clutch) 1968-74 (1-1/8" Tall Direct Clutch Hub) (1-Ring Drum)	1	
554	12119B	Drum, [A904] (Forward) (With 1-Ring) (27-Spline Input Shaft) (3 Clutch) 1968-77 (1-1/4" Tall Direct Clutch Hub) (1-Ring Drum)	1	
554	12122	Drum, [A904] (Forward) (With 2-Ring) (27-Spline Input Shaft) (4 Clutch) 1975-77	1	
554	12123	Drum, [A904 / A500] (Forward) (With 2-Ring) (27-Spline Input Shaft) (4 Clutch) (Non Lock-Up) (1-Ring Drum) 1978-89	1	
554	12122A	Drum, [A904 / A500 / 42RE / 44RE] (Forward) (4 Clutch) (1-Ring Drum) 1990-Up (*Uses 3-Tab Washer)	1	
554	12122C	Drum, [A904 / A500] (Forward) (With 2-Ring) (27-Spline Input Shaft) (4 Clutch) (Non Lock-Up) (1-Ring Drum) (3-Tab Washer #232) 1990-Up	1	
554	12124	Drum, [A904 / A500] (Forward) (With 2-Ring) (26-Spline Input Shaft) (4 Clutch) (Lock-Up) (1-Ring Drum) 1978-89	1	
554	12124A	Drum, [A904 / A500] (Forward) (With 2-Ring) (26-Spline Input Shaft) (4 Clutch) (Lock-Up) (1-Ring Drum) (3-Tab Washer # 232) 1990-Up	1	
554	12125	Drum, [A904] (Colt) (Forward) (With 2-Ring) (27-Spline Input Shaft) (3 Clutch) (Non Lock-Up) (1-Ring Drum) 1974-77	1	
554	12126	Drum, [A904] (Colt) (Forward) (With 3-Ring) (27-Spline Input Shaft) (3 Clutch) (Non Lock-Up) (1-Ring Drum) 1978-Up	1	
554	12127	Drum, [A904] (Colt) (Forward) (With 2-Ring) (23-Spline Input Shaft) (4 Clutch) (Non Lock-Up) (1-Ring Drum) 1978-Up	1	
554	12122B	Drum, [A904 / A500] (Forward) (With 2-Ring) (22-Spline Input Shaft) (3 Clutch) (Lock-Up) (1-Ring Drum) 1990-Up	1	
555	12560B	Drum, [A904 / A500] (Direct) (4 Clutch) (1-Bushing) (6" OD at Lugs) 1968-92	1	3621476
555	12560C	Drum, [A904 / A500] (Direct) (5 Clutch) (1-Bushing) (6" OD at Lugs) 1976-92	1	3743382
555	12560H	Drum, [A904 / A500 / 42RE / 44RE] (Direct) (4 Clutch) (1-Bushing) (6-1/4"OD at Lugs) 93-99	1	
555	12560F	Drum, [A904 / A500 / 42RE / 44RE] (Direct) (5 Clutch) (2-Bushing) (6-1/4"OD at Lugs) (Outer O-Ring #337 Goes on the Piston) 1993-E99	1	
555	12560D	Drum, [A904 / A500 / 42RE / 44RE] (Direct) (4 Clutch) (2-Bushing) (6"OD at Lugs) (Outer O-Ring #337 Goes on the Piston) 1993-E99	1	3515707
555	12560G	Drum, [A904 / A500 / 42RE / 44RE] (Direct) (4 Clutch) (2-Bushing) (6-1/4"OD at Lugs) (Outer O-Ring #337 Goes on the Piston) (V-Notch Steel) 1993-E99	1	
555	12560J	Drum, [A904 / A500 / 42RE / 44RE] (Direct) (5 Clutch) (2-Bushing) (Outer O-Ring Goes Inside Drum) (V-Notch Steel) 1999-Up	1	
556	12159	Drum, [A904] (Reverse) (Takes a Slide on Inner Race) 1974-87	1	4130867
556	12159A	Drum, [A904] (Reverse) (With Pressed on Inner Race) 1988-95	1	4637956
556	12157A	Drum, [A500 / 42RE / 44RE] (Reverse) (With Pressed on Inner Race) 1990-Up (*Undercut For #254 Washer)	1	
570	12672	Clutch Hub, [A500] (Overdrive Clutch) (3" Tall)	1	4461072
580	12656	Planet, [A500] (Overdrive) (4 Gear) (Sun Gear With No ID Groove) (22 Degree Gear)	1	4461017
580	K12656	Planet Kit, [A500] (Overdrive) (4 Gear) (22 Degree Teeth) (Sun Gear No ID Groove) (From #220 to #580) 1989-94	1	
580	12656A	Planet, [A500 / 42RE / 44RE] (Overdrive) (5 Gear) (Straight Teeth)	1	
580	12656C	Planet, [A500/ 42RE/ 44RE] (Overdrive) (4 Gear) (15 Degree Teeth) (Sun Gear 1-ID Groove)	1	4798520

580	K12656C	Planet Kit, [A500 / 42RE / 44RE] (Overdrive) (4 Gear) (15 Degree Teeth) (Sun Gear 1-ID Groove) (From #220 to #580) 1995-Up	1	4874392
580	12656D	Planet, [A500] (Overdrive) (5 Gear) (22 Degree Teeth) (Sun Gear No ID Groove) 1989-94	1	
580	12656B	Planet, [A500 / 42RE / 44RE] (Overdrive) (5 Gear) (15 Degree Teeth) (Sun Gear 1-ID Groove) 1995-Up	1	
580	K12656B	Planet Kit, [A500 / 42RE / 44RE] (Overdrive) (5 Gear) (15 Degree Teeth) (Sun Gear 1-ID Groove) (From #220 to #580) 1995-Up	1	4874396
580	K12656BR	Planet Kit, [A500 / 42RE / 44RE] (Overdrive) (5 Gear) (15 Degree Teeth) (Includes: Planet, Ring Gear, Sun Gear & Plate) (*Will Retro for all A500's) 1995-Up	1	
580	K12656D	Planet Kit, [A500] (Overdrive) (5 Gear) (22 Degree Teeth) (*Will Retro When Used With 22 Degree Ring Gear) 1989-94	1	
582	12135	Planet, [A904] (Front) (4 Gear) (Aluminum) 1968-Up	1	
582	12135D	Planet, [A904 / A500] (Front) (4 Gear) (Steel) (Small) 1975-Up (*Uses 4-3/8"OD Ring Gear)	1	
582	12135C	Planet, [A904 / A500 / 42RE / 44RE] (Front) (4 Gear) (Steel) (Large) (*Uses 5"OD Ring Gear)	1	4130518
582	12135B	Planet, [A904] (Front) (3 Gear) (Steel) 1980-Up	1	
582	12135A	Planet, [A904] (Front) (3 Gear) (Aluminum) 1975-Up	1	
584	12652A	Planet, [A904] (Rear) (4 Gear) (Aluminum) 1968-Up	1	
584	12652B	Planet, [A904 / A500 / 42RE / 44RE] (Rear) (4 Gear) (Steel) 1974-Up	1	4431438
584	12652	Planet, [A904] (Rear) (3 Gear) (Aluminum) 1960-Up	1	
590	12658	Ring Gear, [A500] (Overdrive Planet) (22.5 Degree Teeth) 1989-94 (No ID Groove Between Park & Drum Lugs)	1	4461012
590	12658A	Ring Gear, [A500 / 42RE / 44RE] (Overdrive Planet) (Straight Teeth)	1	
590	12658C	Ring Gear, [A500 / 42RE / 44RE] (Overdrive Planet) (15 Degree Teeth) (1-ID Groove Between Park & Drum Lugs)	1	4761010
592	12150B	Ring Gear W/Hub, [A904] (Front) (4-3/8"OD) 1968-Up (For Small Planet)	1	
592	12150C	Ring Gear W/Hub, [A904 / A500 / 42RE / 44RE] (Front) (5"OD) (For Large Planet) (1-Tab Washer, No Race Under Washer)	1	
592	12150E	Ring Gear W/Hub, [A500] (Front) (4-3/8"OD) (For Small Planet) (2-Tab Race Under Washer)	1	
594	12150D	Ring Gear W/Hub, [A904 / A500 / 42RE / 44RE] (Rear) 1960-Up	1	
610	12655	Sun Gear, [A500] (Overdrive) (22 Degree Angled Teeth) 1989-94	1	4461022
610	12655A	Sun Gear, [A500 / 42RE / 44RE] (Overdrive) (Straight Teeth)	1	
610	12655C	Sun Gear, [A500 / 42RE / 44RE] (Overdrive) (15 Degree Angled Teeth) (ID Groove in Middle of Gear) 1995-Up	1	4778742
612	12654	Sun Gear, [A904] (Forward & Rear Planet) (28 Teeth / 28 Teeth) 1960-Up	1	
612	12654A	Sun Gear, [A904 / A500 / 42RE / 44RE] (Forward & Rear Planet) (30 Teeth / 28 Teeth) 1979-Up	1	4130685
622	12144	Shell, [A904] (*For Small Planet) (6"OD at Lugs) 1960-Up	1	
622	12144A	Shell, [A904 / A500] (*For Large Planet) (6-1/8"OD at Lugs) 1978-Up	1	
622	12144B	Shell, [A500 / 42RE / 44RE] (*For Large Planet) (6-3/8"OD at Lugs) 1993-Up	1	4531288
634	12782	Support, [A904] (Output Shaft) (4-Bolt) 1966-87	1	2466881
634	12782A	Support, [A904] (Output Shaft) (6-Bolt) 1988-Up	1	4431433
634	12962N	Support, [A500] (Piston Retainer) (With Governor Feed Tubes) 1988-95	1	4446722
634	A12962N	Support, [A500 / 42RE / 44RE] (Piston Retainer) (Comes With 2-Plugs) 1988-Up (*Will Retro All Years)	1	
634	12962P	Support, [A500 / 42RE / 44RE] (Piston Retainer) (Has No Feed Tube) 1994-Up	1	4617246
634	12962N-01K	Support, [A500] (Piston Retainer) (Standard Diameter) 1988-Up **(*No Machining Required)**	1	Sonnax
634	12962N-02K	Support, [A500 / 42RE / 44RE] (Piston Retainer) (Oversize) 1988-Up **(*Reverse Drum Must Be Machined)**	1	Sonnax
		SPRAGS & ONE WAY CLUTCHES		

TF-6/A904/ A500(40RH/42RH/42RE/44RE)

650	12865	Sprag, [A500 / 42RE / 44RE] (Overrun Clutch) (Overdrive) 1988-Up	1	4461015
654	K12960A	Sprag, [A904] (Rear) (10-Spring & Roller) 1964-88	1	
654	65727	Sprag, [A904 / A500 / 42RE / 44RE] (Rear) (12-Spring & Roller) 1988-Up	1	8628183
660	12657	Inner Race, [A500 / 42RE / 44RE] (Overdrive Sprag) 1990-Up	1	4461124
664	12962	Inner Race, [A904 / A500] (Rear Sprag) (24 Teeth) (Slide on Type) 1969-89	1	3515618
664	12962A	Inner Race, [A904] (Rear Sprag) (Slide on Type) (47 Teeth) 1965-68	1	
665	12961	Outer Race, [A904] (Rear Sprag) (7-Rivet Holes) 1964-73	1	3780221
665	12961N	Outer Race, [A500 / 42RE / 44RE] (Rear Sprag) (12-Threaded Bolt Holes) 1988-Up	1	4431690
665	12961A	Outer Race, [A904] (Rear Sprag) (6-Threaded Holes) 1974-Up	1	
665	K12961A	Outer Race Kit, [A904] (Rear Sprag) (Bolt In Outer Race & Retainer) (*Replaces 7-Rivet) 1974-Up	1	
		HARD PARTS (Continued)		
670	12607C	Input Shaft, [A904] (1-Ring) (27-Spline) (Non Lock-Up) 1978-Up	1	
670	12607B	Input Shaft, [A904 / A500] (2-Ring) (27-Spline) (Non Lock-Up) 1978-Up	1	
670	12607D	Input Shaft, [A904 / A500 / 42RE / 44RE] (2-Ring) (26-Spline) (Lock-Up) 1978-Up	1	4505189
670	12607F	Input Shaft, [A904] (Colt, Arrow) (1-Ring) (27-Spline) 1974-80	1	
670	12607A	Input Shaft, [A904] (Colt, Arrow) (2-Ring) (27-Spline) (Non Lock-Up) 1974-80	1	
670	12607G	Input Shaft, [A904] (Colt, Arrow) (1-Ring) (23-Spline) (Non Lock-Up) 1974-80	1	
670	12607H	Input Shaft, [A904] (Colt, Arrow) (2-Ring) (23-Spline) (Lock-Up) 1974-80	1	
670	12607E	Input Shaft, [A904 / A500] (2-Ring) (22-Spline) (Lock-Up) 1990-Up	1	
674	12913	Intermediate Shaft, [A500] (*Uses Washer #233 With 2-Inner Tabs) 1988-89	1	4431913
674	12913B	Intermediate Shaft, [A500] (*Uses Washer #233 With 3-Outer Tabs) 1990-Up	1	4617604
678	12160	Output Shaft, [A904] (21-1/2” Long) (2WD) 1960-77	1	
678	12160H	Output Shaft, [A904] (21-1/2” Long) (2WD) 1978-Up	1	
678	12160J	Output Shaft, [A904] (12-1/4” Long) (4x4) (*Eagle Type) 1979-88	1	
678	22173	Output Shaft, [A500] (14-3/4” Long) (4x4) (*Dakota Type) 1988-Up	1	
678	12160N	Output Shaft, [A500] (2WD) (1-1/16” Long Key Way Slot) (16-1/4” Long) 1988-Up	1	
678	22173A	Output Shaft, [A500] (2WD) (1-7/16” Long Key Way Slot) (16-1/4” Long) 1988-Up	1	
678	22173B	Output Shaft, [A500 / 42RE / 44RE] (2WD) (13 Teeth Speed-O Gear) (No Key Way) (16-1/4” Long) 1988-Up	1	
678	22173BA	Output Shaft, [A500 / 42RE / 44RE] (2WD) (No Speed-O Gear) (No Key Way) (16-1/4” Long) 1988-Up	1	
678	22173	Output Shaft, [A500] (4x4) (9-1/4” Long) (1-1/16” Long Key Way Slot) 1988-Up	1	
678	22173C	Output Shaft, [A500 / 42RE / 44RE] (4x4) (9-1/4” Long) (Without Key Way Slot) 1988-Up	1	
678	22173D	Output Shaft, [A500] (4x4) (5-1/4” Long) (1-1/8” Long Splines) (With Pilot on Rear of Shaft) 1988-Up	1	
678	22173DA	Output Shaft, [A500] (4x4) (5-1/4” Long) (1-7/8” Long Splines) 1988-Up	1	
678-P	12160P	Pin, [A904 / A500] (Pilot) (Presses Into End of Output Shaft) 1978-89	1	4130088
678	22171A-02K	Pin/Plug Kit, [A500] (Pilot Pin) (Goes In Intermediate Shaft) (With Orifice Plug For Rear of Shaft) 1990-Up	1	Sonnax
680	12203	Governor, [A904] (Large Valve 1.002”OD) 1963-Up	1	
680	12203A	Governor, [A904] (Large Valve 1.070”OD) 1963-Up	1	
680	12802	Governor, [A500] (Large Valve Is Steel) 1989-93	1	
680	12802B	Governor, [A500] (Large Valve Is Brass) 1989-93	1	
	22803	Valve, [A500] (Governor) (Large, Steel)	1	Superior
	12802-01	Valve, [A500] (Governor) (Large, Aluminum)	1	Sonnax

685	12800	Support, [A500] (Governor) (3-Ring) 1988-Up	1	4461009
685	12194	Support, [A904] (Governor) (2-Ring) 1966-Up	1	
697	12801	Retainer, [A500] (Governor Support)	1	4461002
		VALVE BODIES (REBUILT)		
		A904		
740	CR-2701	Valve Body, [A904] (Non Lock-Up) 1978-Up	1	
740	CR-2702	Valve Body, [A904] (Lock-Up) (1-Wire Solenoid) 1987-Up	1	
740	CR-2703	Valve Body, [A904] (Lock-Up) (No Solenoid) 1978-Up	1	
740	CR-2704	Valve Body, [A904] (Lock-Up) (2-Wire Solenoid) 1994-Up	1	
		A500 HYDRAULIC		
740	CR-2706	Valve Body, [A500] (With 1-Single Solenoid)	1	
740	CR-2707	Valve Body, [A500] (With 2-Solenoids) (Without Boost Tube) (Without Boost Valve) (Small Port)	1	
740	CR-2707B	Valve Body, [A500] (With 2-Solenoids) (Without Boost Tube) (With Boost Valve) (Small Port)	1	
740	CR-2707D	Valve Body, [A500] (With 2-Solenoids) (With Boost Tube) (With Boost Valve) (Small Port)	1	
740	CR-2708	Valve Body, [A500] (With 2-Solenoids) (With Boost Tube) (With Boost Valve) (Large Port)	1	
		A500 ELECTRONIC [42RE / 44RE]		
740	CR-2709	Valve Body, [A500 / 42RE / 44RE] (Round Early Governor Pressure Sensor) (Small Port)	1	
740	CR-2710	Valve Body, [A500 / 42RE / 44RE] (Round Early Governor Pressure Sensor) (Large Port)	1	
740	CR-2712	Valve Body, [A500 / 42RE / 44RE] (Square Late Governor Pressure Sensor) (Large Port)	1	
740	CR-2713	Valve Body, [A500 / 42RE / 44RE] (Square Late Governor Pressure Sensor) (Large Port) (*Late Style Manual Lever)	1	
		VALVE BODIES		
740	12229A	Valve Body, [A904] (Non Lock-Up) 1970-77	1	
740	12229	Valve Body, [A904] 1967-71	1	
740	12229B	Valve Body, [A904] (Lock-Up) 1978-86	1	
740	12229BC	Valve Body, [A904] (Lock-Up) (With 1-Wire Single Solenoid) 1987-Up	1	
740	12229BD	Valve Body, [A904] (Lock-Up) (With 2-Wire Single Solenoid) 1996-Up	1	
740	12229C	Valve Body, [A500] (With 1-Single Solenoid)	1	
740	12229D	Valve Body, [A500] (With 2-Solenoids)	1	
740	12229DA	Valve Body, [A500] (With 2-Solenoids & Boost Valve Tube) 1994-Up	1	
740	12229DE	Valve Body, [A500 / 42RE / 44RE] (With 3-Solenoids & 1-Round Sensor) (3-Pin Governor Solenoid) 1989-93	1	
740	12229DF	Valve Body, [A500 / 42RE / 44RE] (With 3-Solenoids & 1-Round Sensor) (4-Pin Governor Solenoid) 1989-93	1	
740	12229DG	Valve Body, [A500 / 42RE / 44RE] (With 3-Solenoids & 1-Round Sensor) (3-Pin Governor Solenoid) 1994-99	1	
740	12229DH	Valve Body, [A500 / 42RE / 44RE] (With 3-Solenoids & 1-Round Sensor) (4-Pin Governor Solenoid) 1994-99	1	
740	12229DJ	Valve Body, [A500 / 42RE / 44RE] (With 3-Solenoids & 1-Square Sensor) (4-Pin Governor Solenoid) 2000-Up	1	
		VALVE BODY COMPONENTS		
741	22229-03	Neutral Safety Back-Up Insulator, [A904 / A500] (*Replaces Plastic Piece on Manual Shaft Lever)	1	Sonnax
741	K22229A	Rooster Comb, [A904] (Has no Plastic Insulator for Neutral Safety Switch) 1965-E70	1	
741	K22229B	Rooster Comb, [A904] (Has a Long Plastic Insulator for Neutral Safety Switch) L1970-77	1	

741	K22229C	Rooster Comb, [A904] (Has a Long Plastic Insulator for Neutral Safety Switch) 1978-88	1	
741	K22229D	Rooster Comb, [A904 / A500 / 42RE / 44RE] (Has a Long Plastic Insulator for Screw in Neutral Safety Switch) 1989-01	1	
741	22771A-01	Switch Valve, [A500] (Oversize) (*Prevents Lock-Up Shudder)	1	Sonnax
741	10000-09	Check Ball, [A904 / A500 / 42RE / 44RE] (11/32"OD)	1	Torlon
741	22771A-13	Switch Valve, [A500 / 42RE / 44RE] (Oversize) **(*Must Use Reamer 22771A-TL13)**	1	Sonnax
	22771A-TL13	Reamer Set, (*For 22771A-13)	1	Sonnax
741	22999-01	Retainers, [A500 / 42RE / 44RE] (TCC Boost Valve Spring) (5-Pieces)	1	Sonnax
741	K065	Plate, [A500 / 42RE / 44RE] (TCC Boost Valve) (With Retainer to Hold Spring In)	1	Superior
741	K12790	Spring Kit, [A904] (Lock-Up Delay) (Spring & Plate)	1	
741	22771-14K	Plug Kit, [A904 / A500] (Valve Body Governor Bore) (1ea) 1-2 Governor Plug, (1ea) 2-3 Governor Plug & (3) Teflon Seals)	1	Sonnax
741	22771-09	Manual Valve, [A904 / A500 / 42RE / 44RE] (*Allows Converter Charge In Park)	1	Sonnax
741	SC42RHE	Sure Cure Kit, [A500 / 42RE / 44RE]	1	Sonnax
741	22771-HDK	Throttle Valve Kit, [A904 / A500 / 42RE / 44RE] (Hi-Performance)	1	Sonnax
741	22771-01K	Throttle Valve Kit, [A904 / A500 / 42RE / 44RE] (Oversize) (Valve, Plunger, Springs & Sleeve)	1	Sonnax
741	22771-02K	Throttle Valve Kit, [A904 / A500 / 42RE / 44RE] (Oversize) (Valve, Plunger, Springs & Sleeve) **(*Requires: F-22771-TL Reamer & VB-FIX)**	1	Sonnax
741	22771A-10K	Valve, [A904 / A500 / 42RE / 44RE] (Lube Regulated Pressure Valve) (*Reduces Converter Drain Back)	1	Sonnax
741	12229-01K	Plug Kit, [A904] (Regulated Pressure Valve Plug & Sleeve Kit) (1-Plug & 1-Sleeve)	1	Sonnax
741	TF-PLT-94B	Plate, [A500] (Valve Body) (Without Lock-Up Boost Tube) 1988-94	1	Transgo
741	TF-PLT-95S	Plate, [A500] (Valve Body) (With Lock-Up Boost Tube) 1995-02	1	Transgo
		HARD PARTS (Continued)		
760	12181AB	Case, [A904] (318) (With Electronic Switch) (Non Lock-Up) 1965-Up	1	
760	12180J	Case, [A904] (318 / 360) (Non Lock-Up) 1972-86	1	
760	12180JA	Case, [A904] (318 / 360) (Lock-Up) 1978-86	1	
760	12180JB	Case, [A904] (318 / 360) (Lock-Up) (4-Bolt Support) (1-Wire Rear Case Connector) (1/4" Pipe Thread) L1987-Up	1	
760	12180JC	Case, [A904] (318 / 360) (Lock-Up) (6-Bolt Support) (1-Wire Rear Case Connector) (1/4" Pipe Thread) (Without Timing Hole) L1987-Up	1	
760	12180JD	Case, [A904] (318 / 360) (Lock-Up) (6-Bolt Support) (1-Wire Rear Case Connector) (1/4" Pipe Thread) (With Timing Hole) L1987-Up	1	
760	12180JE	Case, [A904] (318 / 360) (Lock-Up) (6-Bolt Support) (2-Wire Rear Case Connector) (3/8" Pipe Thread) (With Timing Hole) L1987-Up	1	
760	12182C	Case, [A904] (Slant 6) 1964-Up	1	
760	12182CA	Case, [A904] (225) (6 Cylinder) (Non Lock-Up) (4-Bolt Support) 1972-86	1	
760	12182CB	Case, [A904] (225) (6 Cylinder) (Lock-Up) (4-Bolt Support) 1978-86	1	
760	12182CC	Case, [A904] (225) (6 Cylinder) (Lock-Up) (6-Bolt Support) (1-Wire Rear Case Connector) (1/4" Pipe Thread) L1987-Up	1	
760	12181M	Case, [A904] (AMC) (Non Lock-Up) 1974-86	1	
760	12181MA	Case, [A904] (AMC) (Lock-Up) (4-Bolt Rear Support) 1978-86	1	
760	12181MB	Case, [A904] (AMC) (Lock-Up) (6-Bolt Rear Support) 1987-Up (No Rear Electric Connector)	1	
760	12181MC	Case, [A904] (AMC) (Lock-Up) (6-Bolt Rear Support) (1-Wire Rear Case Connector) (1/4" Pipe Thread) 1987-Up	1	
760	12181V	Case, [A904] (3.9L) (Lock-Up) (*Dakota With Extra Boss on Bell) 1988-Up	1	
760	12180G	Case, [A904] (Non Lock-Up) (*With V-8 Chevrolet Bell) 1972-79	1	
760	12181N	Case, [A904] (2.8L) (V6) (Lock-Up) (No Rear Electric Connector) (With Square Timing Hole)	1	
760	12181NA	Case, [A904] (2.8L) (V6) (Lock-Up) (4-Bolt Support) (1-Wire Case Connector) (1/4" Pipe Thread) (Square Timing Hole)	1	

760	12181NB	Case, [A904] (2.8L) (V6) (Lock-Up) (6-Bolt Support) (1-Wire Case Connector) (1/4" Pipe Thread) (Square Timing Hole)	1	
760	12181NC	Case, [A904] (2.8L) (V6) (Lock-Up) (6-Bolt Support) (2-Wire Case Connector) (3/8" Pipe Thread) (Square Timing Hole)	1	
760	12181ND	Case, [A904] (2.8L) (V6) (Lock-Up) (No Rear Electric Connector) (Without Square Timing Hole)	1	
760	12181P	Case, [A500] (318 / 360) (3.9L) (.900"OD Case Connector) (7-3/4" Top Bolts) (16-Bolt Holes Bell to Engine) (Round & Square) (Driver Side Starter Without Timing Hole) (14-Openings) 1988-94	1	
760	12181Q	Case, [A500] (*Some 3.9L) (.900"OD Case Connector) (7-3/4" Top Bolts) (17-Bolt Holes Bell to Engine) (Round & Square) (Driver Side Starter With Timing Hole) (14-Openings) 1988-94	1	
760	12181QA	Case, [A500] (318 / 360) (3.9L) (.900"OD Case Connector) (7-3/4" Top Bolts) (16-Bolt Holes Bell to Engine) (Round & Square) (Driver Side Starter With Timing Hole) (14-Openings) 88-94	1	
760	12181QB	Case, [A500 / 42RE / 44RE] (318 / 360) (3.9L) (1.080"OD Case Connector) (7-3/4" Top Bolts) (16-Bolt Holes Bell to Engine) (Round & Square) (Driver Side Stater) (13-Openings) 1995-00	1	
760	12181QC	Case, [A500 / 42RE / 44RE] (318 / 360) (3.9L) (1.080"OD Case Connector) (7-3/4" Top Bolts) (17-Bolt Hole Bell to Engine) (Driver Side Starter) (13-Openings) (3-Prong Screw-In Neutral Safety Switch) 1988-94	1	
760	12181QD	Case, [A500 / 42RE / 44RE] (318 / 360) (3.9L) (1.080"OD Case Connector) (7-3/4" Top Bolts) (17-Bolt Hole Bell to Engine) (Driver Side Starter) (14-Openings) (3-Prong Screw-In Neutral Safety Switch) 1995-00	1	
760	12181QE	Case, [A500 / 42RE / 44RE] (318 / 360) (3.9L) (1.080"OD Case Connector) (7-3/4" Top Bolts) (17-Bolt Hole Bell to Engine) (Driver Side Starter) (13-Openings) (.790"OD Push-In Neutral Safety Switch) 2001-Up	1	
760	12181QF	Case, [A500 / 42RE / 44RE] (318 / 360) (3.9L) (1.080"OD Case Connector) (7-3/4" Top Bolts) (16-Bolt Hole Bell to Engine) (Round & Square) (Passenger Side Starter) (14-Openings) Up to 1994	1	
760	12181QG	Case, [A500 / 42RE / 44RE] (318 / 360) (3.9L) (1.080"OD Case Connector) (7-3/4" Top Bolts) (16-Bolt Hole Bell to Engine) (Round & Square) (Passenger Side Starter) (13-Openings) 1995-Up	1	
760	12181QH	Case, [A500 / 42RE / 44RE] (1.080"OD Case Connector) (5-7/8" Top Bolts) (Passenger Side Starter) (14-Openings) (Round & Square) (For Pump Gasket) 1989-94 (*Fits 4.0L Jeep)	1	
760	12181QJ	Case, [A500 / 42RE / 44RE] (1.080"OD Case Connector) (5-7/8" Top Bolts) (Passenger Side Starter) (13-Openings) (Round & Square) (*For Pump Gasket) 1995-Up (*Fits 4.0L Jeep)	1	
760	12181QK	Case, [A500] (.900"OD Case Connector) (5-1/8" Top Bolts)	1	
760	12173	Case, [A904] (225) (6 Cylinder) (Push Button) 1960-65	1	
760	12174	Case, [A904] (273 / 318) (Push Button) 1960-65	1	
		CASE COMPONENTS		
	22179-06K	Sleeve Adapter Kit, [A500 / 42RE / 44RE] (Neutral Safety Switch)(Sleeve With O-Ring & Washer) **(*Makes 01-Up Cases Fit Early Type Cases With 3-Prong Neutral Safety Switch)**	1	Sonnax
	22179-02	Sleeve, [A904 / A500 / 42RE / 44RE] (Shift Linkage Shaft) **(*Use With 56361-TL)**	1	Sonnax
	56361-TL	Tool Kit, (*For 22179-02)	1	Sonnax
		HARD PARTS (Continued)		
765	12182	Pan, [A904] 1960-Up	1	
765	12182B	Pan, [A904] (Small Pan) (Colt, Arrow Type)	1	
765	12182D	Pan, [A500] (2.420" Deep) (With No Step In Bottom)	1	4505089
765	12182E	Pan, [A500 / 42RE / 44RE] (2.920" Deep) (With Step In Bottom)	1	
765	12182F	Pan, [A500 / 42RE / 44RE] (3.155" Deep) (With No Step In Bottom) 1998-Up (*Uses the Metal / Plastic Filter)	1	
770	12205	Extension Housing, [A904] (14-3/4") 1966-Up	1	
770	12205A	Extension Housing, [A904] (4x4) (Eagle) 1979-Up (Snap Ring Cover on Bottom)	1	
770	12205B	Extension Housing, [A904] (2WD) (14-3/4") (Long Snap Ring Cover on Passenger Side)	1	
770	12205C	Extension Housing, [A500] (2WD) (Speed-O Gear Type) (21-1/2")	1	
770	K12999C	Overdrive Assembly, [A500] (2WD) (Governor Type) (With Speed-O) (No Sensor) (4 Gear Planet)	1	

TF-6/A904/ A500(40RH/42RH/42RE/44RE)

770	12205FK	Extension Housing, [A500] (4x4) (15-7/8" Long) (No Speed-O) (No Sensor) (*Uses a Rear Seal) (*Uses a 2-Bolt Mount) (*Can Use 22205M or 22205N)	1	
770	K12999K	Overdrive Assembly, [A500] (4x4) (15-7/8" Long) (Governor Type) (No Speed-O) (No Sensor) (*Uses a Rear Seal) (*Uses a 2-Bolt Mount) (*Can Use K12999M or K12999N)	1	
770	22205L	Extension Housing, [A500] (4x4) (15-7/8" Long) (No Speed-O) (No Sensor) (No Rear Seal)	1	
770	22205M	Extension Housing, [A500] (4x4) (15-7/8" Long) (No Speed-O) (No Sensor) (*Uses a Rear Seal) (*Uses a 3-Bolt Mount) (*Can Use a 22205N)	1	
770	K12999M	Overdrive Assembly, [A500] (4x4) (15-7/8" Long) (Governor Type) (No Speed-O) (No Sensor) (Uses a Rear Seal) (*Uses a 3-Bolt Mount) (*Can Use K12999N)	1	
770	22205N	Extension Housing, [A500] (4x4) (15-7/8") (No Speed-O) (No Sensor) (*Uses a Rear Seal) (*Uses 5-Bolt Mount)	1	
770	K12999N	Ovedrive Assembly, [A500] (4x4) (15-7/8") (Governor Type) (No Speed-O) (No Sensor) (Rear Seal) (5-Bolt Mount)	1	
770	12205E	Extension Housing, [A500 / 42RE / 44RE] (2WD) (No Governor) (With Speed-O) (With Sensor) (21-1/2")	1	
770	K12999E	Overdrive Assembly, [A500 / 42RE / 44RE] (2WD) (No Governor) (With Speed-O) (With Sensor) (4 Gear Planet)	1	
770	12205F	Extension Housing, [A500 / 42RE / 44RE] (2WD) (No Governor) (No Speed-O) (With Sensor) (21-1/2")	1	
770	K12999F	Overdrive Assembly, [A500 / 42RE / 44RE] (2WD) (No Governor) (No Speed-O) (With Sensor) (4 Gear Planet)	1	
770	22205JA	Extension Housing, [A500 / 42RE / 44RE] (4x4) (10-7/8" Long) (No Speed-O) (With Sensor) (*Can Use 22205J)	1	
770	K12999JA	Overdrive Assembly, [A500 / 42RE / 44RE] (4x4) (10-7/8" Long) (No Governor) (No Speed-O) (With Sensor) (Output Shaft Splined to End) (No Side Mount) (*Can Use K12999J)	1	
770	K12999JB	Overdrive Assembly, [A500 / 42RE / 44RE] (4x4) (10-7/8" Long) (No Governor) (No Speed-O) (With Sensor) (With 1/2" Pilot on the End of Shaft) (With Side Mount)	1	
770	22205J	Extension Housing, [A500 / 42RE / 44RE] (4x4) (10-7/8" Long) (No Governor) (Holds 4 or 6 Overdrive Clutch) (With Speed Sensor) (2-Mounting Bosses on Driver Side) (Casting # 17903)	1	
770	K12999J	Overdrive Assembly, [A500 / 42RE / 44RE] (4x4) (10-7/8" Long) (No Governor) (Holds 4 or 6 Overdrive Clutch) (With Speed Sensor) (2-Mounting Bosses on Driver Side) (Casting # 17903)	1	
770	22205JC	Extension Housing, [A500 / 42RE / 44RE] (4x4) (10-7/8" Long) (No Governor) (Holds 4 or 6 Overdrive Clutch) (With Speed Sensor) (No Mounting Bosses on Driver Side)	1	
770	K12999JC	Overdrive Assembly, [A500 / 42RE / 44RE] (4x4) (10-7/8" Long) (No Governor) (Holds 4 or 6 Overdrive Clutch) (With Speed Sensor) (No Mounting Bosses on Driver Side)	1	
770	12205P	Extension Housing, [A904] (2WD) (Push Button) 1960-65	1	
771	12802	Cover, [A904] (Output Shaft Snap Ring) (With Bolts)	1	
774	12922	Speed-O Housing, [A904] (Aluminum) (Cable Type)	1	
774	12922A	Speed-O Housing, [A904 / A500] (Plastic) (With 3-Round Prong Connectors) (VSS)	1	
774	12922B	Speed-O Housing, [A904 / A500] (Plastic) (With 3-Flat Blade Connectors) (VSS)	1	
775	B-61	Bolt, [A904 / A500] (Flex Plate to Converter)	AR	
839	34996	Pan Magnet, (Rectangle)	1	
842	12894	Bracket, [A904 / A500] (Speed-O Hold Down)	1	
844	12682	Key, [A500] (Holds Governor Support to Shaft) (Half Moon)	1	
844	12682A	Key, [A500] (Holds Governor Support to Shaft) (Rectangle)	1	
848	12413	Gear, [A904 / A500] (Driven Speed-O) (24 Teeth) (With 3" Long Steel Shaft)	1	
848	12416	Gear, [A904 / A500] (Driven Speed-O) (29 Teeth) (With 1-1/2" Long Steel Shaft)	1	
848	12417	Gear, [A904 / A500] (Driven Speed-O) (32 Teeth) (With 1-1/2" Long Steel Shaft)	1	
848	12418	Gear, [A904 / A500] (Driven Speed-O) (33 Teeth) (With 3" Long Steel Shaft)	1	
848	12420	Gear, [A904 / A500] (Driven Speed-O) (34 Teeth) (With 1-1/2" Long Steel Shaft)	1	

848	12422	Gear, [A904 / A500] (Driven Speed-O) (36 Teeth) (With 1-1/2" Long Steel Shaft)	1	
	K12928	Snap Ring Kit, [A904] 1960-Up	1	
	K12928A	Snap Ring Kit, [A500 / 42RE / 44RE] 1988-Up	1	
860	22602	Snap Ring, [A500 / 42RE / 44RE] (Overdrive Clutch) (Waved)	1	4461066
861	22609	Snap Ring, [A500 / 42RE / 44RE] (Overdrive Clutch) (Front)	1	4461082
862	22603	Snap Ring, [A500 / 42RE / 44RE] (Overdrive Clutch) (Flat)	1	4461065
863	22608	Snap Ring, [A500 / 42RE / 44RE] (Overdrive Direct Drum to Ring Gear)	2	4461060
864	22604	Snap Ring, [A500 / 42RE / 44RE] (Overdrive Direct Clutch) (Front) (Waved)	1	4461032
866	22605	Snap Ring, [A500 / 42RE / 44RE] (Overdrive Sun Gear) (Round)	1	4461064
867	22606	Snap Ring, [A500 / 42RE / 44RE] (Overdrive Sun Gear) (Flat)	1	4461063
868	22607	Snap Ring, [A500 / 42RE / 44RE] (Overdrive Ring Gear to Output Shaft)	1	4461059
877	12602	Snap Ring, [A904 / A500 / 42RE / 44RE] (Forward Clutch) (.043") (Bottom) (Wavy)	1	2466283
878	12601	Snap Ring, [A904 / A500 / 42RE / 44RE] (Forward & Direct Clutch) (.060") (Top) (Flat)	2	4130761
878	12601A	Snap Ring, [A904 / A500 / 42RE / 44RE] (Forward & Direct Clutch) (.062") (Top) (Wavy)	1	3410571
878	12602B	Snap Ring, [A904 / A500 / 42RE / 44RE] (Rear Clutch) (.076") (Top) (Flat)	1	
878	12602C	Snap Ring, [A904 / A500 / 42RE / 44RE] (Rear Clutch) (.098")	1	
905	K12895	Servo Assembly, [A904 / A500 / 42RE / 44RE] (Front) (1.240"OD) (6 Cylinder)	1	
905	K12895A	Servo Assembly, [A904 / A500 / 42RE / 44RE] (Front) (.990"OD) (V-8)	1	
906	12891	Spring, [A904 / A500 / 42RE / 44RE] (Front Servo)	1	
907	12628	Piston, [A904 / A500 / 42RE / 44RE] (Front Servo)	1	4058777
909	12891R	Retainer, [A904 / A500 / 42RE / 44RE] (Front Servo Spring)	1	
910	K12895B	Servo Assembly, [A904 / A500 / 42RE / 44RE] (Rear)	1	
911	12892	Spring, [A904 / A500 / 42RE / 44RE] (Rear Servo)	1	
912	22912A	Piston, [A904 / A500 / 42RE / 44RE] (Rear Servo)	1	Sonnax
913	22912-01K	Plug Kit, [A904 / A500 / 42RE / 44RE] (Reverse Servo) (Contains: Pin / Plug, O-Ring & Retaining Ring)	1	Sonnax
914	12892R	Retainer, [A904 /A500 / 42RE / 44RE] (Rear Servo Spring)	1	
	K056	Spacer Kit, [A904 / A500 / 42RE / 44RE] (Intermediate Servo) (Pack of 4ea)	1	Superior
916	12689	Strut, [A904 / A500 / 42RE / 44RE] (Front Band)	1	3515084
917	K12689A	Strut Assembly, [A904] (Rear Band) (For Rigid Band) (With Anchor & Strut)	1	
917	12689AL	Lever, [A904 / A500] (Rear Band) (*For Rigid Band)	1	
917	K12689B	Strut Assembly, [A904 / A500 / 42RE / 44RE] (Rear Band) (*For Double Wrap Band)	1	
917	12689BL	Lever, [A904 / A500 / 42RE / 44RE] (Rear Band) (*For Double Wrap Band)	1	4202764
919	12691	Adjusting Screw, [A904 / A500 / 42RE / 44RE] (Front Band)	1	1942477
925	K22841	Accumulator Assembly, [A904 / A500 / 42RE / 44RE] (Aluminum)	1	
926	12893	Spring, [A904 / A500 / 42RE / 44RE] (Accumulator Return)	1	4531259
927	22841A	Piston, [A904 / A500 / 42RE / 44RE] (Accumulator) (Aluminum)	1	3743650
927	22841	Piston, [A904 / A500 / 42RE / 44RE] (Accumulator) (Plastic)	1	
927	22841B	Piston, [A904 / A500 / 42RE / 44RE] (Accumulator) (Aluminum) (With 4-Rings)	1	
936	12861-01	Spring, [A500 / 42RE / 44RE] (3-4 Accumulator)	1	Sonnax
960	12783	Piston, [A500 / 42RE / 44RE] (Overdrive Direct Clutch)	1	52118599
964	12554	Piston, [A904 / A500 / 42RE / 44RE] (Forward Clutch)	1	3515716
965	12561B	Piston, [A904 / A500 / 42RE / 44RE] (Direct) (*Uses the Outer O-Ring Only)	1	4617154
965	12561C	Piston, [A904 / A500 / 42RE / 44RE] (Direct) (Has No O-Rings on Piston) 1998-Up	1	
970	12673	Spring, [A500 / 42RE / 44RE] (Overdrive Clutch Return)	1	4461027
974	12745	Spring, [A904 / A500] (Forward Return Spring) (5.030:OD) 1960-89	1	1942414

TF-6/A904/ A500(40RH/42RH/42RE/44RE)

974	12745	Spring, [A904 / A500 / 42RE / 44RE] (Forward Clutch Return) (4.970"OD) 1990-Up (*Retro Fits to 1960)	1	1942414
975	12562	Spring, [A904 / A500 / 42RE / 44RE] (Direct Clutch Return)	1	
985	12562R	Retainer, [A904 / A500 / 42RE / 44RE] (Direct Clutch Spring)	1	4617516
989	12752	Retainer, [A904] (Sprag) (*For Bolt Rear Support) 1960-88	1	2801426
994	12677	Park Rod, [A904]	1	
994	12677A	Park Rod, [A500 / 42RE / 44RE]	1	4431748
995	K12678	Park Pawl Assembly, [A500]	1	
996	30155	Fitting, [A904] (Cooler Line) (5/16" Line x 1/8" Pipe) (Screw In Flared)	1	
996	26930	Fitting, [A904] (Cooler Line) (90 Degree Elbow) (5/16" Line x 1/8" Pipe) (Screw In Flared)	1	
996	31117	Fitting, [A904 / A500] (Cooler Line) (3/8" Line x 1/4" Pipe) (1/4" Screw In Flared Male on Case) (*For Push in Line) (Gas)	1	
996	22000-01K	Repair Kit, [A904 /A500 /42RE / 44RE] (Cooler Line Fitting) (1/4" Pipe Fittings) (*Fix For Cracked Cases Cooler Fittings) (Gas Only*) (5-Adapters & 1-Tap Tool) **(*Replace Adapter # 2000-01)**	1	Sonnax
996	22000-01	Adapter, [A904 / A500 / 42RE / 44RE] (*For 22000-01K Kit)	1	Sonnax
996	12289	Fitting, [A500] (Cooler Line) (3/8" Line x 1/4" Pipe) (Push In With Wire Type Clip)	1	
996	K057	Clip Kit, [A904 / A500 / 42RE / 44RE] (Push In Cooler LIne) (6-Clips & O-Rings) (For 1/2" Cooler Lines) (*Prevents Blow Out at Connection)	1	Superior
999	K12679	Tube Set, [A500] (Governor)	2	

NOTES

TF-8 / A727

RWD 3 Speed

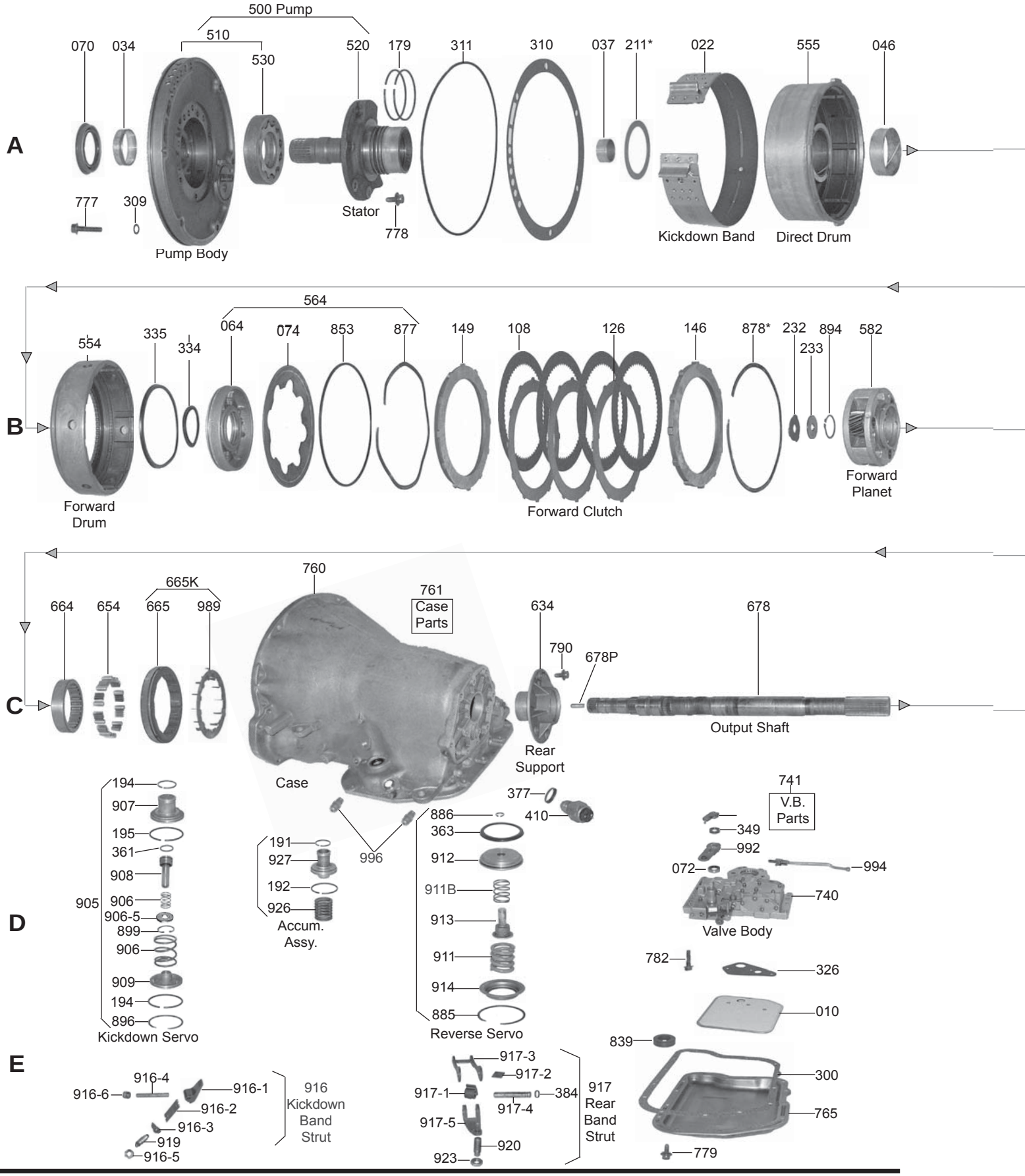

RWD 3 Speed

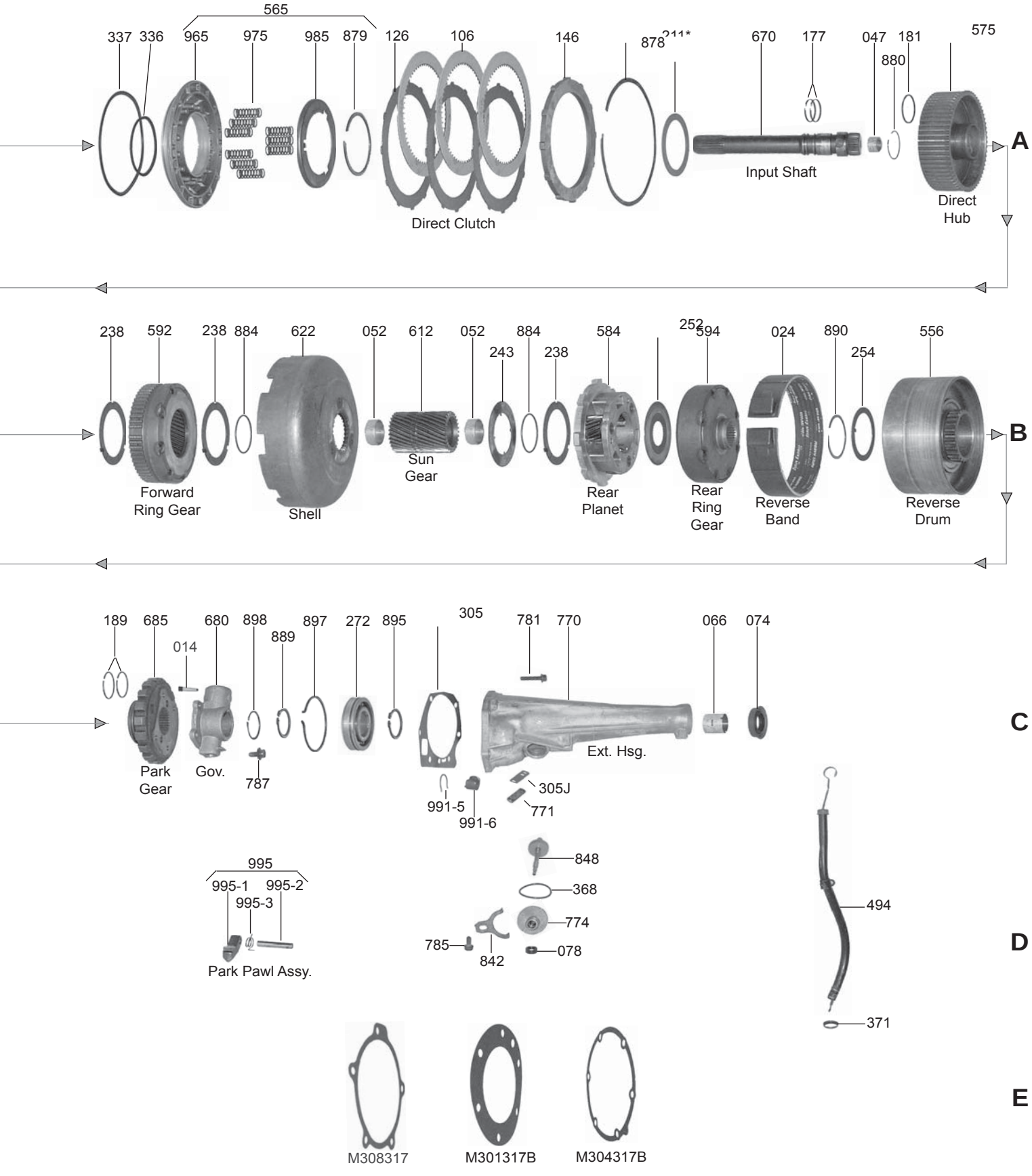
565
337
336
965
975
985
879
126
106
146
878
211*
670
177
047
181
880
575
Input Shaft
Direct Clutch
Direct Hub
A
238
592
238
884
622
052
612
052
243
884
238
584
252
594
024
890
254
556
Forward Ring Gear
Shell
Sun Gear
Rear Planet
Rear Ring Gear
Reverse Band
Reverse Drum
B
189
685
014
680
898
889
897
272
895
305
781
770
066
074
Park Gear
Gov.
787
Ext. Hsg.
305J
771
991-5
991-6
C
995
995-1
995-2
995-3
Park Pawl Assy.
848
368
774
785
842
078
494
371
D
M308317
M301317B
M304317B
E

A518(46RH/46RE) A618(47RH/47RE/48RE)

RWD 4 Speed

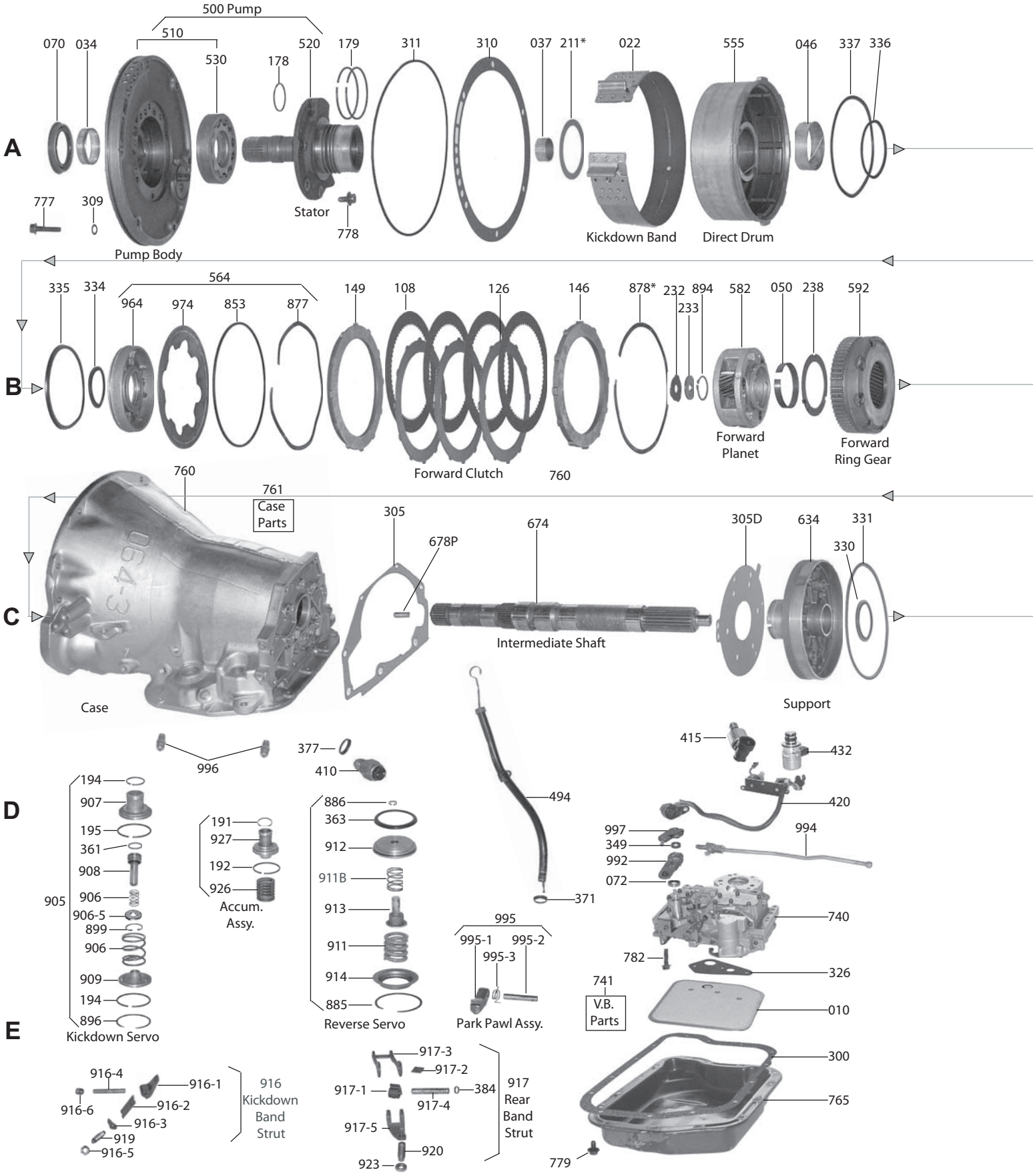

A518(46RH/46RE) A618(47RH/47RE/48RE)

RWD 4 Speed

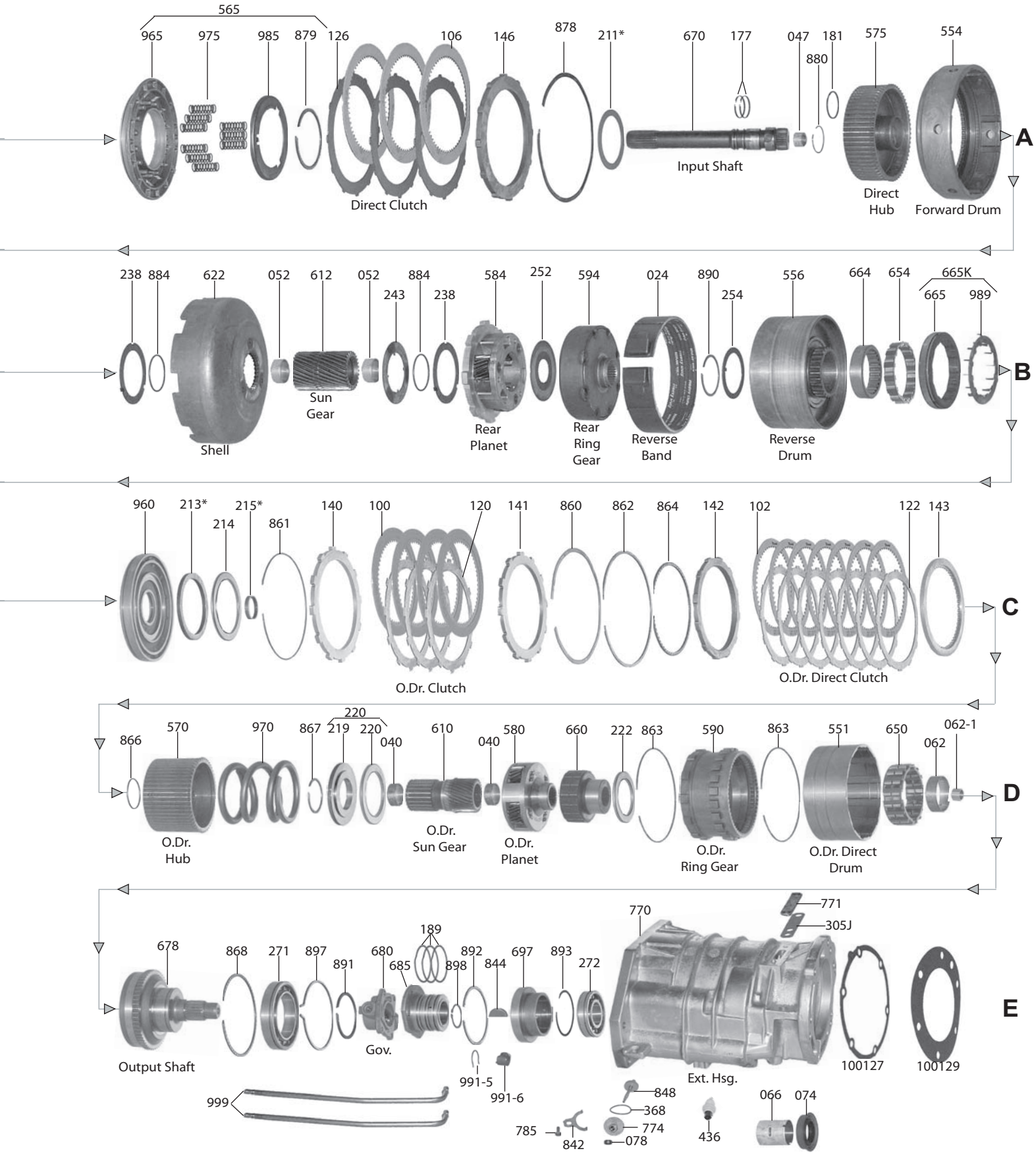

A727/A518(46RH/46RE) A618(47RH/47RE/48RE)

ILL#	PART#	DESCRIPTION	QTY	REF #
	K12512	Valve Body Gasket Kit, [A518 / 46RE / 47RE] 1990-Up	1	
		PAPER & RUBBER KIT		
	K22950B-1	Paper & Rubber Kit, [A727] 1962-70	1	
	K22950C-1	Paper & Rubber Kit, [A727] 1971-Up	1	
	K22950N-1	Paper & Rubber Kit, [A518 / A618 / 46RE / 47RE] 1990-Up	1	
		OVERHAUL KITS		
	K22950B	Overhaul Kit, [A727] 1962-70	1	
	K22950C	Overhaul Kit, [A727] 1971-Up	1	
	K22950N	Overhaul Kit, [A518 / A618 / 46RE / 47RE] 1990-03	1	
	K22950V	Overhaul Kit, [48RE] 2003-Up	1	
		MASTER L/STEEL KIT		
	DK2200-S	Master L/Steels Kit, [A727] 1962-70	1	
	DK2200A-S	Master L/Steels Kit, [A727] 1971-Up	1	
	DK2200N-S	Master L/Steels Kit, [A518 / A618 / 46RE / 47RE] 1990-97	1	
	DK2200P-S	Master L/Steels Kit, [A518 / A618 / 46RE / 47RE] (With Hi-Energy Direct Friction) 1998-02	1	
	DK2200V-S	Master L/Steels Kit, [48RE] (With 1-Sided Overdrive Direct Friction) 2003-Up	1	
	DK2200W-S	Master L/Steels Kit, [48RE] (With 2-Sided Overdrive Direct Frictions) 2003-Up	1	
		MASTER W/STEEL KIT		
	DK2200	Master L/Steels Kit, [A727] 1962-70	1	
	DK2200A	Master L/Steels Kit, [A727] 1971-Up	1	
	DK2200N	Master W/Steels Kit, [A518 / A618 / 46RE / 47RE] (With Viton) 1990-97	1	
	DK2200P	Master W/Steels Kit, [A518 / A618 / 46RE / 47RE] 1998-02 (With Hi-Energy Direct Friction) (With (10) Overdrive Direct Frictions & (9) .054" Overdrive Direct Steels) (*For [A618] With .085" Direct Steels) (*Use (4ea)-22954B) (*Not in DK2200P)	1	
	DK2200V	Master W/Steels Kit, [48RE] (With 1-Sided Overdrive Direct Friction) 2003-Up	1	
	DK2200W	Master W/Steels Kit, [48RE] (With 2-Sided Overdrive Direct Frictions) 2003-Up	1	
		FILTER		
010	12776A	Filter, [A727] (Small Dacron) (2-Hole) 1962-65	1	3621456
010	12776B	Filter, [A727] (Small Brass) 1962-65	1	3410253
010	12776C	Filter, [A727 / A518 / A618 / 46RE / 47RE] (Large Dacron) 1966-Up	1	3515996
010	12776D	Filter, [A727 / A518 / A618 / 46RE / 47RE] (Large Brass) 1962-65	1	
010	12776F	Filter, [A518 / A618 / 46RE / 47RE] (Metal & Plastic) 1998-Up	1	
		FILTER KIT		
	FK12776C8	Filter Kit, [A727 / A518 / A618 / 46RE / 47RE] (Large Dacron) 1966-97	1	
	FK12776C68	Filter Kit, [A904 / A500 / A727 / A518 / 46RE / 47RE] (Combo Large Dacron Filter) 66-Up	1	
	FK12776F	Filter Kit, [A518 / A618 / 46RE / 47RE] (Metal & Plastic) 1998-Up	1	
	FK12776F68	Filter Kit, [A500 / A518 / 46RE / 47RE] (Combo) (Metal & Plastic) 1998-Up	1	
		MISC. FILTERS		
014	12785	Screen, [A727 / A518] (Governor)	1	3743519
	32777	Screen, [A727 / A518] (Valve Body Regulator Feed Line) (Thimble Type)	1	
	12784	Orifice Screen, [A518 / A618] (Overdrive Piston Retainer)	1	4412583
		BANDS		
022	22825F	Band, [A727 / A518 / A618 / 46RE / 47RE] (Kickdown) (Flex) 1962-Up	1	3621491

022	RPS22825HP	Band, [A727 / A518 / A618 / 46RE / 47RE] (Kickdown) (*Pro Series Raybestos) 1962-Up	1	
022	22825M	Band, [A727 / A518 / A618 / 46RE / 47RE] (Kickdown) (Multi-Flex) 1962-Up	1	
022	22825K	Band, [A727 / A518 / A618 / 46RE / 47RE] (Kickdown) (Flex) (With Kevlar)	1	
022	22825S	Band, [A727 / A518 / A618 / 46RE / 47RE] (Kickdown) (Flex) (Slip In)	1	
022	22825	Band, [A727] (Kickdown) (Rigid)	1	2124342
022	22825B	Band, [A727] (Kickdown) (Rigid) (Wide, Hemi)	1	
024	22900	Band, [A727 / A518] (Reverse) (*Fits 6" Overdrive Drum) 1962-Up	1	1942133
024	22900A	Band, [A727 / A518] (Reverse) (With Heavy Duty Ends) (*Fits 6" Overdrive Drum) 1962-Up	1	4505091
024	22900B	Band, [A727 / A518 / A618 / 46RE / 47RE] (Reverse) (*Fits 6-1/4" Overdrive Drum) L1991-Up	1	4471476
024	22900C	Band, [A618 / 47RE] (Reverse) (Double Wrap) (*Fits 6-1/4" Overdrive Drum) 1996-Up	1	4531231
		BUSHINGS		
	K22902	Bushing Kit, [A727] 1962-70	1	
	K22902A	Bushing Kit, [A727] 1971-6/1993	1	
	K22902N	Bushing Kit, [A518 / A618] 1990-6/1993	1	
	K22902P	Bushing Kit, [A518 / A618 / 46RE / 47RE] 7/1993-Up	1	
	K22902V	Bushing Kit, [48RE] 2003-Up	1	
034	22003	Bushing, [A727 / A518 / 46RE / 47RE] (Pump Body) (Babbit) 1962-Up	1	2205031
034	22003A	Bushing, [A727 / A518 / 46RE / 47RE] (Pump Body) (Bronze) 1962-Up	1	2466324
034	22003B	Bushing, [A727 / A518 / A618 / 46RE / 47RE] (Pump Body) (With Indented Oil Pockets) 1993-Up	1	4531163
037	22005	Bushing, [A727] (Stator) (Rear) 1962-66	1	2205240
037	22005A	Bushing, [A727 / A518] (Stator) (Rear) (1-1/8"ID) 1967-6/1993	1	2801348
037	22005B	Bushing, [A727 / A518 / A618 / 46RE / 47RE] (Stator) (Rear) (1-1/4"ID) 7/1993-Up	1	
040	12511	Bushing, [A518 / A618 / 46RE / 47RE] (Overdrive Sun Gear) (Rear) (No Flange) (1.42"OD) 1989-99 (Front / 1990-93)	1	
040	12511A	Bushing, [A518 / A618 / 46RE / 47RE] (Overdrive Sun Gear) (Front) (With Flange) (1.42"OD) 1994-99	1	
040	12511B	Bushing, [A518 / A618 / 46RE / 47RE] (Overdrive Sun Gear) (Front) (No Flange) (1.50"OD) 1999-Up	1	
046	22006	Bushing, [A727] (Direct Drum) (Narrow) 1962-70	1	2205241
046	22006A	Bushing, [A727 / A518 / A618 / 46RE / 47RE] (Direct Drum) (With Oil Groove) 1971-Up	1	4058647
047	22001	Bushing, [A727 / A518 / 46RE / 47RE] (Input Shaft) (.635"ID) 1962-Up	1	3681709
050	22011	Sleeve, [A518 / A618 / 46RE / 47RE] (Front Planet) (Teflon) (*For 5 & 6 Gear Steel Planet) (.370" Wide) 1996-Up	1	4617951
050	22011A	Sleeve, [48RE] (Front Planet) (Teflon) (*For 5 & 6 Gear Steel Planet) (.300" Wide) 03-Up	1	52854038AA
052	22002	Bushing, [A727 / A518 / A618 / 46RE / 47RE] (Sun Gear) 1962-Up	2	1736520
052	22002A	Bushing, [A518 / 46RE / 47RE] (Rear Sun Gear) (.750" Wide)	1	2464381
062	12509	Bushing, [A518 / A618 / 46RE / 47RE] (Output Shaft to Overdrive Sprag Race) (2.144"ID) 1990-Up	1	4461006
062-1	12510	Bushing, [A518 / A618 / 46RE / 47RE] (Output Shaft to Intermediate Shaft) (.605"ID) 90-Up	1	4461007
066	6023	Bushing, [A727 / A518 / A618 / 46RE / 47RE] (Extension Housing) (1.690"ID) (Bronze) **(*Does Not Fit 48RE)**	1	2801724
066	22023	Bushing, [48RE] (Extension Housing) 2003-Up	1	
066	6023T	Bushing, [A727 / A518 / A618 / 46RE / 47RE] (Extension Housing) (1.690"ID) (Teflon Coated)	1	
		METAL CLAD SEALS		
070	22573	Seal, [A727 / A518 / A618 / 46RE / 48RE] (Front) 1962-Up	1	3515137
072	22574	Seal, [A727 / A518 / A618 / 46RE / 48RE] (Manual Shaft) (1/4" Thick) 1966-Up	1	3878447

072	22575	Seal, [A727 / A518 / A618 / 46RE / 48RE] (Manual Shaft) (3/8" Thick) 1966-Up	1	2466842
074	34743C	Seal, [A727 / A518 / A618 / 46RE / 47RE] (Rear Without Boot)	1	3515383
074	22978	Seal, [A727] (Rear With Bolt-on Yoke) (2-3/8"OD) 1962-92	1	2205080
074	22978A	Seal, [A727] (Rear With Bolt-on Yoke) (2-3/4"OD) 1993-Up	1	4412507
074	16695C	Seal, [A727 / A518 / A618 / 46-47RE] (Rear With Boot)	1	
074	22978B	Seal, [48RE] (Rear) (2WD) (2.985"OD) 2003-Up	1	52854126AA
074	12925T	Seal, [A727 / A518 / A618 / 46RE / 48RE] (Extension Housing) (4x4) (2.568"OD)	1	
078	3991A	Seal, [A727 / A518 / A618] (Speed-O Shaft With Spring)	1	25519078
		FRICTION CLUTCH		
100	12845	Friction, [A518 / A618 / 46RE / 48RE] (Overdrive Brake Clutch) (.087") (Flat) 1990-Up	2-4	4461045
100	12845A	Friction, [A518 / A618 / 46RE / 48RE] (Overdrive Brake Clutch) (.087") (Waved) 1990-Up (Hi-Energy) (*Retros Early)	4-6	4461181
102	12842	Friction, [A518 / A618 / 46RE / 48RE] (Overdrive Direct Clutch) (.063") 1988-Up	6-8	4461042
102	12842A	Friction, [48RE] (Overdrive Direct Clutch) (.048") (54 Teeth) (Hi-Energy) (1-Sided Friction) (Internal Teeth) 2003-Up	12	
122	12842B	Friction, [48RE] (Overdrive Direct Clutch) (.048") (12 Teeth) (Hi-Energy) (1-Sided Friction) (External Teeth) 2003-Up	11	
106	22595B	Friction, [A727 / A518 / A618 / 46RE / 47RE] (Direct Clutch) (.095") (Waffle) 1962-97	3-4	4329846
106	22595D	Friction, [A518 / A618 / 46RE / 48RE] (Direct Clutch) (.085") (Hi-Energy) 1998-Up	3-5	
106	22595BHP	Friction, [A727 / A518 / A618] (Direct Clutch) (.095") (Hi-Performance Red) 1962-97	3-4	
106	K22595BHP	Friction Kit, [A727 / A518 / A618] (Direct Clutch) (.095") (Hi-Performance Red) 1962-97 (4 Per Kit)	1	
108	22642A	Friction, [A727 / A518 / A618 / 46RE / 47RE] (Forward Clutch) (.061") (62 Teeth) (Smooth) 1962-Up	4	4531067
108	22642B	Friction, [A727 / A518 / A618 / 46RE / 47RE] (Forward Clutch) (.065") (62 Teeth) (Hi-Energy) 1962-Up (Kevlar)	4	
108	22642C	Friction, [48RE] (Forward Clutch) (.061") (93 Teeth) (Hi-Energy) 2003-Up	4	
108	22642AHP	Friction, [A727 / A518 / A618 / 46RE / 47RE] (Forward Clutch) (.061") (62 Teeth) (Hi-Performance Red) 1962-Up	4	
108	K22642HP	Friction Kit, [A727 / A518 / A618 / 46RE / 47RE] (Forward Clutch) (.061") (62 Teeth) (Hi-Performance Red) (4-Per Kit) 1962-Up	1	
	K22100A	Friction Module, [A727] 1962-Up	1	
	K22100N	Friction Module, [A518 / A618 / 46RE / 47RE] 1990-97	1	
	K22100P	Friction Module, [A518 / A618 / 46RE / 47RE] 1998-Up (With Hi-Energy Direct Frictions)	1	
	K22100V	Friction Module, [48RE] 2003-Up (With 1-Sided Overdrive Direct Frictions)	1	
	K22100W	Friction Module, [48RE] 2003-Up (With 2-Sided Overdrive Direct Frictions)	1	
	K22100AHP	Friction Module, [A727] (Hi-Performance Red) 1962-97	1	
		STEEL CLUTCH		
120	12847	Steel, [A518 / A618 / 46RE / 48RE] (Overdrive Brake Clutch) (.068") 1990-Up	2-6	4461047
122	12854	Steel, [A518 / A618 / 46RE / 48RE] (Overdrive Direct Clutch) (.069") 1988-Up	5-7	4461054
122	22854A	Steel, [A518 / A618 / 46RE / 48RE] (Overdrive Direct Clutch) (.054") 1996-Up	7-9	
126	22594	Steel, [A727 / A518 / A618 / 46RE / 48RE] (Forward & Direct Clutch) (.070")	6-8	2124826
126	22594B	Steel, [A618 / 46RE / 48RE] (Direct Clutch) (.085") 1998-Up	4-5	2124826AB
126	22594K	Steel, [A727 / A518 / A618 / 46RE / 48RE] (Forward & Direct Clutch) (.070") (Kolene)	6-8	
126	22594X	Steel, [A727 / A518 / A618 / 46RE / 48RE] (Forward & Direct Clutch) (.090") (Oversize)	AR	
	K22110A	Steel Module, [A727] 1962-97	1	
	K22110AK	Steel Module, [A727] (Hi-Performance Red) (Kolene) 1962-97	1	
	K22110N	Steel Module, [A518 / A618 / 46RE / 47RE] 1990-97	1	

	K22110P	Steel Module, [A518 / A618 / 46RE / 48RE] 1998-Up (*Except 48RE)	1	
		CLUTCH PRESSURE PLATES		
140	12566	Pressure Plate, [A518 / A618] (Overdrive Clutch) (.371") (Front) 1990-92 (*Use 12567 for 1993-Up)	1	4461048
141	12567	Pressure Plate, [A518 / A618] (Overdrive Clutch) (.216") (Rear) 1990-99 (*Also Overdrive Clutch Front #140) 1993-99	1	4461033
140	12566A	Pressure Plate, [48RE] (Overdrive Clutch) (.237") (Front) 2003-Up	1	
141	12567A	Pressure Plate, [48RE] (Overdrive Clutch) (.122" at Lugs) (Rear) (Stepped) (.235" at Step) (6 Clutch Overdrive) 2003-Up	1	
142	12569	Pressure Plate, [A518 / A618] (Overdrive Direct Clutch) (Front) (.214")	1	4461031
142	12569A	Pressure Plate, [A518 / A618] (Overdrive Direct Clutch) (Front) (.085")	1	
143	12568	Pressure Plate, [A518 / A618] (Overdrive Direct Clutch) (Rear) (.215") (*No External Tabs)	1	4461030
146	22940	Pressure Plate, [A727 / A518 / A618] (Forward & Direct Clutch) (Top) (.285") (12 Teeth)	2	2801961
149	22760	Pressure Plate, [A727 / A518 / A618] (Forward & Direct Clutch) (Bottom) (Beveled)	1	2466803
		VALVE BODY KITS		
	K22908BS	Valve Body Kit, [A727]	1	Superior
	K22908B	Valve Body Kit, [A727] (*No Yo-Yo)	1	Transgo
	K22908D	Valve Body Kit, [A518 / A618 / 47RE] (Diesel) 1990-02	1	Transgo
	K22908RE	Valve Body Kit, [A618 / 48RE] (V-10 & Diesel) 2003-Up	1	Transgo
	K22908RES	Valve Body Kit, [A618 / 48RE] (Diesel With Throttle Valve Actuator) 2005-Up	1	Superior
	K22908NS	Valve Body Kit, [A518 / A618 / 46RE / 47RE] (Gas / Diesel) 1989-98 (*Can Use K22908PS)	1	Superior
	K22908N	Valve Body Kit, [A518 / A618 / 46RE / 47RE] (Gas Only*) 1990-Up	1	Transgo
	K22908PS	Valve Body Kit, [A518 / A618 / 46RE / 47RE] (Gas / Diesel) 1999-03	1	Superior
	TF-1	Reprogramming Kit, [A727] (Heavy Duty & Hi-Performance) 1962-Up	1	Transgo
	TFOD-HD2	Reprogramming Kit, [A518 / A618 / 46RE / 47RE] (Heavy Duty & Hi-Performance) (***Not For [48RE] Use K22908RE)**	1	Transgo
	TF-2	Reprogramming Kit, [A727] (Full Race) 1962-Up	1	Transgo
	TF-3	Reprogramming Kit, [A727] (Manual Shift) 1962-Up	1	Transgo
	TFOD-3	Reprogramming Kit, [A518 / A618 / 46RE / 47RE] (Manual Shift) 1962-Up	1	Transgo
		OIL SEALING RINGS		
	K22952A	Ring Kit, [A727] (Long Ring) 1962-70	1	
	K22952C	Ring Kit, [A727] (Short Ring) 1962-70	1	
	K22952D	Ring Kit, [A727] (Short Ring) 1971-Up	1	
	K22952B	Ring Kit, [A727] (Long Ring) 1971-Up	1	
	K22952U	Ring Kit, [A727] 1962-Up	1	
	K22952N	Ring Kit, [A518 / A618] (With Seal Plated Stator Ring) 1990-Up	1	
	K22952V	Ring Kit, [48RE] 2003-06	1	
177	22626	Ring, [A727] (Input Shaft) (1.125"OD) (Metal) 1962-66	2	1942041
177	22626A	Ring, [A727 / A518] (Input Shaft) (1.175"OD) (Metal) 1967-93	2	2801054
177	22626B	Ring, [A727 / A518 / A618 / 46RE / 48RE] (Input Shaft) (1.246:OD) (Metal) 1994-Up	2	
177	22626C	Ring, [A727 / A518 / A618 / 46RE / 48RE] (Input Shaft) (1.246"OD) (Teflon) 1994-Up	2	4741836
178	22551	Ring, [48RE] (Stator Shaft) (Front) (Teflon) (Lap Joint) 2003-Up	2	
179	22550	Ring, [A727] (Stator Shaft) (2.625"OD) (Metal) 1962-70	2	2124813
179	22550A	Ring, [A727] (Stator Shaft) (2.625"OD) (Aluminum) 1971-Up	2	3515321
179	22550B	Ring, [A727 / A518 / A618 / 46RE / 48RE] (Stator Shaft) (2.625"OD) (Metal) 1978-Up (Seal Plated)	2	3743689
181	22627	Ring, [A727 / A518 / A618 / 46RE / 48RE] (Forward Clutch Drum) (1.875"OD) (Metal) 1978-Up	1	4058443

189	12850	Ring, [A727] (Governor) (2.250”OD) (Butt Joint) (Metal) 1962-Up	2-3	1942109
189	12850A	Ring, [A727] (Governor) (2.250”OD) (Lock Joint) (Metal) 1962-Up	2-3	2892358
189	12811	Ring, [A518 / A618] (Governor) (Metal) 1990-Up	2-3	
191	12853L	Ring, [A727] (Accumulator Piston) (Small) (1.062”OD)	1	
191	12853T	Ring, [A518 / A618 / 46RE / 48RE] (Accumulator Piston) (Small) (Teflon)	1	
	12860T	Ring, [A518 / A618 / 46RE / 48RE] (3-4 Accumulator Piston) (Small, In Valve Body) (Teflon) (*For D-Rings Use K12903D)	1	
	K12903D	D-Ring Set, [A518 / A618 / 46RE / 48RE] (3-4 Accumulator Piston) (3-Rubber D-Rings)	1	
192	12770	Ring, [A727] (Accumulator Piston) (Large) (2.00”OD) (Metal)	1	1315158
192	12770T	Ring, [A518 / A618 / 46RE / 48RE] (Accumulator Piston) (Large) (2.00”OD) (Teflon)	1	
	12861T	Ring, [A518 / A618 / 46RE / 48RE] (3-4 Accumulator Piston) (Large, In Valve Body) (Teflon) (*For D-Rings Use K12903D)	1	3743013
194	2823K	Ring, [A727 / A518 / A618 / 46RE / 48RE] (Kickdown Servo Piston) (Small) (1.500”OD) (Metal) 1962-Up	1	3165806
195	22827	Ring, [A727 / A518 / A618 / 46RE / 48RE] (Kickdown Servo Piston) (Large & Cover) (2.125”OD) (Metal) 1962-Up	2	1942123
		WASHERS & BEARINGS		
	K22951	Washer Kit, [A727] 1962-70	1	
	K22951A	Washer Kit, [A727] 1971-Up	1	
	K22951N	Washer Kit, [A518 / A618 / 46RE / 47RE] 1990-Up	1	
	K22951V	Washer Kit, [48RE] 2003-Up	1	
	K22906	Bearing Kit, [A518 / A618] 1989-Up (Torrington)	1	
211	22449	Washer, [A727 / A518 / A618 / 46RE / 48RE] (Stator to Direct Drum) (.043”)	1	2204621
211	22449A	Washer, [A727 / A518 / A618 / 46RE / 48RE] (Stator to Direct Drum) (.061”)	1	2204622
211	22449C	Washer, [A727 / A518 / A618 / 46RE / 48RE] (Stator to Direct Drum) (.084”)	1	2204623
211	22449D	Washer, [A727 / A518 / A618 / 46RE / 48RE] (Stator to Direct Drum) (.102”)	1	2400284
211	22449E	Washer, [A727 / A518 / A618 / 46RE / 48RE] (Stator to Direct Drum) (.121”)	1	4617164
211	22449F	Washer, [A727 / A518 / A618 / 46RE / 48RE] (Stator to Direct Drum) (.139”)	1	4617165
211	22449G	Washer, [A727 / A518 / A618 / 46RE / 48RE] (Stator to Direct Drum) (.137”)	1	4617166
213	22414A	Race, [A518 / A618 / 46RE / 48RE] (Overdrive Piston to Hub) (.124”)	1	4431585
213	22414B	Race, [A518 / A618 / 46RE / 48RE] (Overdrive Piston to Hub) (.139”)	1	4431731
213	22414C	Race, [A518 / A618 / 46RE / 48RE] (Overdrive Piston to Hub) (.154”)	1	4431586
213	22414D	Race, [A518 / A618 / 46RE / 48RE] (Overdrive Piston to Hub) (.169”)	1	4431732
213	22414E	Race, [A518 / A618 / 46RE / 48RE] (Overdrive Piston to Hub) (.184”)	1	4431587
213	22414F	Race, [A518 / A618 / 46RE / 48RE] (Overdrive Piston to Hub) (.199”)	1	4431733
213	22414G	Race, [A518 / A618 / 46RE / 48RE] (Overdrive Piston to Hub) (.214”)	1	4431588
213	22414H	Race, [A518 / A618 / 46RE / 48RE] (Overdrive Piston to Hub) (.229”)	1	4431734
213	22414J	Race, [A518 / A618 / 46RE / 48RE] (Overdrive Piston to Hub) (.244”)	1	4431590
213	12783-01K	Race Kit, [A518 / A618 / 46RE / 48RE] (Overdrive Piston to Hub) (Contains: 1-Race & 3-Shims)	1	Sonnax
214	12739	Bearing, [A518 / A618 / 46RE / 48RE] (Overdrive Piston to Hub) 1990-Up	1	4446724
215	12737	Spacer, [A518 / A618 / 46RE / 48RE] (Intermediate Shaft to Overdrive Planet) (.158”)	1	4431916
215	12737A	Spacer, [A518 / A618 / 46RE / 48RE] (Intermediate Shaft to Overdrive Planet) (.175”)	1	4431917
215	12737B	Spacer, [A518 / A618 / 46RE / 48RE] (Intermediate Shaft to Overdrive Planet) (.193”)	1	4431918
215	12737C	Spacer, [A518 / A618 / 46RE / 48RE] (Intermediate Shaft to Overdrive Planet) (.211”)	1	4431919
220	12860-01	Bearing & Race, [A518 / A618 / 46RE / 48RE] (Overdrive Planet to Hub) (*Updated)	1	Sonnax
222	12740	Bearing, [A518 / A618 / 46RE / 48RE] (Overdrive Inner Sprag Race to Output Shaft) (3.210”OD)	1	4461014
232	22665A	Washer, [A727] (Output Shaft to Forward Drum) (Metal) 1962-76	1	2400843

232	22665B	Washer, [A727] (Output Shaft to Forward Drum) (3-Tab) 1977-89	1	3681688
232	12705J	Washer, [A727 / A518 / A618 / 46RE / 48RE] (Output Shaft) (3-Outer Tabs) (.052") (Gray) 1990-Up	1	
232	12705K	Washer, [A727 / A518 / A618 / 46RE / 48RE] (Output Shaft) (3-Outer Tabs) (.068") (Red) 1990-Up	1	4505186
232	12705L	Washer, [A727 / A518 / A618 / 46RE / 48RE] (Output Shaft) (3-Outer Tabs) (.083") (Green) 1990-Up	1	4505187
232	K055	Shim Kit, [A727 / A518 / A618 / 46RE / 48RE] (Goes Under # 232 Washer) (3 Each) (.015" & .025" Shims)	1	Superior
233	22665R	Race, [A727] (Output Shaft to Washer) (*For 22665B) 1977-89	1	4329806
233	12706A	Race, [A727 / A518 / A618 / 46RE / 48RE] (Output Shaft) 1990-Up (***Used With 12705 J, K, or L)**	1	4505188
238	22700	Washer, [A727] (Forward Planet) (3 Gear to Ring Gear) (Ring Gear to Shell & Shell to Rear Planet) (3-Tab)	2-4	1942081
238	22700A	Washer, [A727 / A518 / 46RE / 47RE] (Forward Planet) (4 Gear to Ring Gear) (Ring Gear to Shell & Shell to Rear Planet) (4-Tab) (2.500"ID)	2-4	2801060
238	22700C	Washer, [A618 / 46RE / 47RE] (Forward Planet to Ring Gear & Shell to Rear Planet) (4-Tab) (2.245"ID)	2-4	
238	22700B	Washer, [A727 / A518 / A618 / 46RE / 47RE] (Forward Planet to Ring Gear) (5-Tab) (*For a 5 Gear Planet)	2-4	4539129
238	22700E	Washer, [48RE] (Rear Planet to Shell & Ring Gear to Rear Planet) (6-Tab) (2.525"ID) (3.405"OD) 2003-Up	1-2	
238	22700D	Washer, [48RE] (Forward Planet to Ring Gear) (6-Tab) (2.525"ID) (3.700"OD) 2003-Up	1	52854039AA
238	22703	Washer, [46RE / 48RE] (Forward Ring Gear to Shell) (6-Tab) 1996-Up	1	4618000
238	22700-Z	Shim Kit, [A727 / A518] (Goes Under #238) (10 Per Kit)	1	Sonnax
243	22700R	Race, [A727 / A518 / A618 / 46RE / 47RE] (Driving Shell) (Rear) (3.460"OD) 1962-02	1	1942080
243	22700RA	Race, [48RE] (Driving Shell) (Rear) (3.730"OD) 2003-Up	1	52854101AA
252	22702	Washer, [A727 / A518 / A618 / 46RE / 47RE] (Rear Planet to Rear Ring Gear) 1962-95	1	2400580
252	22702A	Washer, [46RE / 47RE] (Rear Planet to Rear Ring Gear) 1996-Up	1	3681935
254	22701A	Washer, [A727 / A518] (Under Snap Ring to Rear Band Drum) (1-Tab) 1989-90	1	52118059
254	22701	Washer, [A518 / A618] (Under Snap Ring to Rear Band Drum) (2-Inner Tangs) 1991-Up	1	52854076AA
	22556BRG	Bearing, [A727 / A518 / A618] (Case Repair)	1	Sonnax
271	22976A	Ball Bearing, [A518 / A618 / 46RE / 48RE] (Output Shaft) (Front) (2.750"ID) (With Snap Ring Groove)	1	4461008
272	22976B	Ball Bearing, [A727 / A518 / A618 / 46RE / 48RE] (Output Shaft) (Rear) (1.375"ID)	1	
272	22976C	Ball Bearing, [A727] (Output Shaft) (Rear) (1.230"ID) (With Snap Ring Groove)	1	4130537
272	22976D	Bearing, [A727] (Output Shaft) (With Bolt-on Yoke)	1	1672194
		GASKETS & RUBBER COMPONENTS		
300	3859	Gasket, [A727 / A518 / A618/ 46RE / 48RE] (Pan) 1962-Up	1	2464324
300	3859 **D** or **F**	Gasket, [A727 / A518 / A618 / 46RE / 48RE] (Fiber) **(*Duraprene** or **Farpak)**	1	
300	22500	Gasket, [48RE] (Plastic With Rubber Bead) 2003-Up (*Will Retro to 1962)	1	
305	13253	Gasket, [A727] (Extension Housing) 1966-Up	1	2466954
305	3855	Gasket, [A727] (Extension Housing) 1962-65 (With Rear Pump)	1	2400064
305	12145	Gasket, [A518 / A618 / 46RE / 48RE] (Extension Housing) 1990-Up	1	4531192
305D	12146	Gasket, [A518 / A618 / 46RE / 48RE] (Overdrive Piston Retainer) 1990-Up	1	4471565
305J	13254	Gasket, [A727 / A518 / 46RE / 48RE] (Output Shaft Bearing Cover) 1962-Up	1	266049
309	13268A	Gasket, [A727] (Pump Bolt Washer) 1962-Up	6	3884683
310	3856	Gasket, [A727 / A518 / A618 / 46RE / 48RE] (Pump)	1	4028377
311	3857	O-Ring, [A727 / A518 / A618 / 46RE / 48RE] (Pump)	1	1942021
325	12111	Gasket, [A518 / A618 / 46RE / 48RE] (Governor Pressure Solenoid) 1988-Up	1	
326	3969	Gasket, [A727 / A518 / A618] (Filter) (*For Brass Filter)	1	

330	12198	Lip Seal, [A518 / A618 / 46RE / 48RE] (Overdrive Clutch Piston) (Inner)	1	
331	12199	Lip Seal, [A518 / A618 / 46RE / 48RE] (Overdrive Clutch Piston) (Outer)	1	
334	3647	Lip Seal, [A727 / A518 / A618 / 46RE / 48RE] (Forward Clutch) (Inner) 1962-Up	1	1942054
335	3391	Lip Seal, [A727 / A518 / A618 / 46RE / 48RE] (Forward Clutch) (Outer) 1962-Up	1	2124835
336	3863	Lip Seal, [A727] (Direct Clutch) (Inner) 1962-71	1	2124820
336	K3863	Lip Seal Kit, [A727] (Direct Clutch) 1962-71	1	
336	13310	Lip Seal, [A727 / A518 / A618 / 46RE / 48RE] (Direct Clutch) (Inner) 1972-Up	1	3410226
336	13310A	Lip Seal, [A727 / A518 / A618 / 46RE / 48RE] (Direct Clutch) (Inner) (Vamac) (*Updated Wider) (*Will Retro 1972-Up)	1	
337	3272	Lip Seal, [A727] (Direct Clutch) (Outer) 1962-71	1	2124821
337	13309	Lip Seal, [A727 / A518 / A618 / 46RE / 48RE] (Direct Clutch) (Outer) 1972-Up	1	4058484
347	12448	O-Ring, [A518 / A618] (Electric Connector) (15/16" Connector)	2	6033448
347	12448A	O-Ring, [46RE / 48RE] (Electric Connector) (1-1/16" Connector)	2	6034748
349	13207	Seal, [A727 / A518 / A618 / 46RE / 48RE] (Throttle Lever Shaft)	1	2466548
363	3872	Lip Seal, [A727] (Reverse Servo) (2.812"OD) 1962-63	1	2464481
363	3876V	Lip Seal, [A727 / A518 / 46RE] (Reverse Servo) (2.812"OD) (Viton) 1964-Up	1	4058741
363	22176	Lip Seal, [A618 / 47RE] (Reverse Servo) (2.479"OD) (V10 & Diesel) (Viton) 1994-Up	1	4531233
368	3301	O-Ring, [A727 / A518 / A618] (Speed-O Housing) (Red) 1966-Up	1	6031370
371	3292A	Boot, [A518 / A618 / 46RE / 48RE] (Filler Tube) 1997-Up	1	52118629
371	3291	O-Ring, [A727] (Filler Tube) 1962-Up	1	6264902
377	13267	Gasket/Washer, [A727 / A518 / A618 / 46RE / 47RE] (Neutral Safety Switch) 1968-95	1	2408143
384	3665	Seal, [A727] (Reverse Band Lever Shaft) 1962-Up	1	8634188
384	13503	Seal, [A518 / A618 / 46RE / 47RE] (Reverse Band Lever Shaft) 1990-Up	1	6030910
		TECHNICAL MANUALS		
	TMA727	Technical Manual, [A727]	1	ATSG
	TMA500	Technical Manual, [A518 / A618]	1	ATSG
	TM48RE	Technical Manual, [48RE] 2003-Up	1	ATSG
		ELECTRICAL COMPONENTS		
410	K2627B	Neutral Switch, [A727] (3-Prong) (Long) 1969-77	1	2932820
410	K2627C	Neutral Switch, [A727 / A518 / A618 / 46RE / 47RE] (3-Prong) (Short) (Push-on Connector) 1978-95	1	4057750
410	K2627D	Neutral Switch, [A518 / A618 / 46RE / 47RE] (3-Prong) (Extended) (Clip-on Connector) 1996-00	1	
410	K2627E	Neutral Switch, [A518 / A618 / 46RE / 48RE] (Push-In) (5-Prong) 2001-Up (Cast # 56045489AC) (Square) (2-Bolt)	1	
415	**Discontinued**	Sensor, [A518 / A618] (Governor Pressure) (3-Pin) 1989-95 (Transducer)	1	56027562
415	22955	Sensor, [A518 / A618 / 46RE / 47RE] (Governor Pressure) (4-Pin Round Connector) (Transducer) 1996-99	1	56041403AA
415	22955A	Sensor, [A518 / A618 / 46-48RE] (Governor Pressure) (Transduce) (4-Blade Rectangle Connector) (Black Plastic) 2000-Up	1	56028196AD
420	22954	Solenoid, [A518] (Overdrive) (Single) (2-Pin Case Connector) 1990-Up	1	4531253
420	12954	Solenoid, [A518] (Overdrive & Lock-Up) (3-Pin Case Connector) 1990-95	1	4431954
420	22954B	Solenoid, [A518 / 46RE / 47RE] (Overdrive & Lock-Up) (8-Pin Case Connector) (With 4- Pin Governor Sensor) 1996-99	1	52118652
420	K22954B	Solenoid Kit, [A518 / 46RE / 47RE] (Overdrive & Lock-Up) (8-Pin Case Connector) (With 4-Pin Governor Sensor) (*Replaces 3-Pin) 1996-99	1	
420	22954C	Solenoid, [A518 / 46RE / 48RE] (Overdrive & Lock-Up) (8-Pin Case Connector) (With 4- Blade Rectangle Governor Sensor Connector) 2000-Up	1	5211500AB
432	22958	Solenoid, [A518 / A618 / 46RE / 48RE] (Governor Pressure) 1994-Up	1	4617210
432	22958HD	Solenoid, [A518 / A618 / 46-48RE] (Governor Pressure) 1994-Up **(*Borg Warner HD Replacement)**	1	

	22959	TPS Noise Filter, [A618 / 47RE] (Diesel)	1	
432	TF-GOV-SOL	Repair Kit, [A518 / A618 / 46RE / 48RE] (Governor Pressure Solenoid) 1994-Up (*Fixes 6-Solenoids)	1	Transgo
436	92887	Sensor, [A518 / A618 / 46RE / 48RE] (Output Speed Sensor) (.928"OD Threads)	1	4800879
445	K22986	Repair Kit, [A518 / A618 / 46RE / 48RE] (External Harness) (8-Pin Connector) (With 8-Crimp Style Connectors) 1993-Up	1	
	K22987C	Repair Harness, [A518 / A618 / 46RE / 47RE] (NSS) 1978-95 (*Fits K2627C)	1	
	K22987D	Repair Harness, [A518 / A618 / 46RE / 47RE] (NSS) 1996-00 (*Fits K2627D)	1	
	K22987E	Repair Harness, [46RE / 48RE] (NSS) 2001-Up (*Fits K2627E)		
	4638763	Temp Switch, [A518] (Screws Into Cooler Line) 1990-93	1	
	33004281	Temp Switch, [A518 / A618 / 46RE / 47RE] (Screws Into Cooler Line) 1994-01	1	
		MISC. COMPONENTS		
	10000-03K	E-Clip, (Chrysler Shift Linkage) (10 Per Pack)	1	Sonnax
	22800A	Grommet, [A727] (Cross Shaft Link) (AMC / JEEP)	1	
	22800	Grommet, [A727] (Cross Shaft Link) (Chrysler)	1	3467800
	22800	Grommet, [A727] (Manual Shaft)	1	3575333
	30135	Hitch Pins, (Chrysler)	1	
		HARD PARTS		
500	22537	Pump, [A727] 1967-70	1	
500	22537A	Pump, [A727] 1971-77	1	
500	22537B	Pump, [A727 / A518] (Non Lock-Up) (1-1/8"ID Rear Bushing) 1978-Up	1	
500	22537E	Pump, [A518 / A618] (Non Lock-Up) (1-1/4" Rear Bushing) 1994-Up	1	
500	22537C	Pump, [A727 / A518] (Lock-Up) (1-1/8"ID Rear Bushing) 1978-Up	1	
500	22537F	Pump, [A518 / A618 / 46RE / 47RE] (Lock-Up) (1-1/4"ID Rear Bushing) (Gas) 1994-Up	1	4796467AB
500	22537G	Pump, [A727 / A518 / A618 / 46RE / 47RE] (Lock-Up) (1-1/4"ID Rear Bushing) (Diesel) 1994-Up	1	
500	22537H	Pump, [A618 / 48RE] (Lock-Up) (1-1/4" ID Rear Stator Bushing) (O-Ring Groove on Stator) 2003-Up	1	
510	22535	Pump Body W/Gears, [A727] 1962-73	1	
510	22535A	Pump Body W/Gears, [A727 / A518] (15 Teeth on Outer Gear) 1974-Up	1	
510	22535B	Pump Body W/Gears, [A518 / A618 / 46RE / 47RE] (12 Teeth on Outer Gear) L1989-E96	1	
510	22535C	Pump Body W/Gears, [A518 / A618 / 46RE / 47RE] (11 Teeth on Outer Gear) L1996-Up (*Also Fits [48RE] 2003-Up) (With Cast # 52854006AA) (*Can Use 22535B)	1	
520	22763	Stator, [A727] 1967-71	1	2801045
520	22758	Stator, [A727] (With 1-Check Ball) 1972-77	1	3878343
520	22759B	Stator, [A727 / A518] (Non Lock-Up) (1-1/8"ID Rear Bushing) 1978-Up (With 2-Check Balls)	1	4058929
520	22758E	Stator, [A518 / A618] (Non Lock-Up) (1-1/4"ID Rear Bushing) (With 2-Check Balls)	1	
520	22758C	Stator, [A727 / A518] (Lock-Up) (1-1/8"ID Rear Bushing) 1978-Up (With 3-Check Balls)	1	4028273
520	22758D	Stator, [A518 / A618 / 46RE / 47RE] (Lock-Up) (1-1/4"ID Rear Bushing) 1994-Up (With 3- Check Balls)	1	
520	22758H	Stator, [A618 / 48RE] (Lock-Up) (1-1/4"ID Rear Bushing) (With 3-Check Balls) (O-Ring Groove) 2003-Up	1	
		PUMP COMPONENTS		
530	22759	Pump Gears, [A727] (With 15 Teeth Outer Gear) (.747" Thick) 1962-Up	1	
530	22759A	Pump Gears, [A727 / A518 / A618] (With 15 Teeth Outer Gear) (.748" Thick) 1978-Up	1	
530	22759B	Pump Gears, [A727 / A518 / A618] (With 15 Teeth Outer Gear) (.749" Thick) 1978-Up	1	

530	22759C	Pump Gears, [A727 / A518 / A618 / 46RE / 47RE] (With 12 Teeth Outer Gear) (.748" Thick) 1994-Up	1	
530	22759D	Pump Gears, [48RE] (With 11 Teeth Outer Gear)	1	
		HARD PARTS (Continued)		
551	22659	Drum, [A518 / 46RE] (Overdrive) (6 Clutch) (Gas) (.100" Top of Drum to Snap Ring Groove)	1	4461040
551	22659A	Drum, [A618 / 47RE / 48RE] (Overdrive) (Diesel) (8 Clutch) (.090" Top of Drum to Snap Ring Groove)	1	4461089
554	22766	Drum, [A727 / A518 / A618 / 46RE / 48RE] (Forward Clutch) (Rear Clutch Retainer)	1	3743622
554	K22766	Drum, [A518 / A618 / 46RE / 48RE] (Forward Assembly) (*From 670 to 877) 1994-Up	1	
555	22100	Drum, [A727] (Direct Front Clutch) (4 Clutch) 1962-70 (*Narrow Bushing)	1	
555	22761	Drum, [A727 / A518] (Direct Front Clutch) (3 Clutch) 1971-Up (*Wide Bushing)	1	4058437
555	K22767B	Drum Kit, [A727 / A518 / A618 / 46RE / 48RE] (Direct Front Clutch) (5 Clutch) 1971-Up (*4 Clutch Drum Converted to a 5 Clutch Drum) (Contains: 555, 965, (5) 22595D Frictions, (5) 22594 Steels, & (1) 22940S)	1	
555	22767	Drum, [A727 / A518 / A618] (Direct Front Clutch) (4 Clutch) 1971-Up (*Wide Bushing)	1	4058437AB
555	22767A	Drum, [A518 / A618 / 46RE / 47RE] (Direct Front Clutch) (4 Clutch) 1992-Up (*Wide Bushing)	1	
555	22767B	Drum, [A618 / 48RE] (Direct Front Clutch) (5 Clutch) 2003-Up	1	52854151AA
556	22157	Drum, [A727] (Reverse) (*Uses Slide-on Race) (12-Rollers) 1962-87	1	
556	22157E	Drum, [A727 / A518] (Reverse) (*Uses Slide-on Race) (12-Roller) 1988-91 (Has Washer Under Snap Ring)	1	4505095
556	22157F	Drum, [A727 / A518] (Reverse) (*With Press-on Race) (14-Roller) 1990-Up (6"OD at Band Surface)	1	
556	22157A	Drum, [A727 / A518] (Reverse) (*With Press-on Race) (14-Roller) 1990-Up (6-1/4"OD at Band Surf) (No Lip on Drum)	1	4505095
556	22157C	Drum, [A518 / A618 / 46RE / 48RE] (Reverse) (*With Press-on Race) (14-Roller) 1992-Up (Drum Is 6-1/4"OD at the Band Surface) (With Lip on Drum)	1	52118057
570	12672	Clutch Hub, [A518 / A618] (Overdrive Clutch) (3" Tall)	1	4461072
575	22125	Clutch Hub, [A727] (Direct Clutch) 1967-77 (Without Sealing Ring)	1	
575	22125A	Clutch Hub, [A727] (Direct Clutch) 1978-Up (With Sealing Ring)	1	
575	22125B	Clutch Hub, [A518 / A618 / 46RE / 48RE] (Direct Clutch) 1990-Up	1	4617855
580	12656	Planet, [A518] (Overdrive) (4 Gear) (*Uses a Sun Gear With No I.D. Groove) (22 Degree Teeth)	1	4461017
580	K12656	Planet Kit, [A518] (Overdrive) (4 Gear) (22 Degree Teeth) 1989-94 (Sun Gear No ID Groove) (#220 to #580)	1	
580	12656A	Planet, [A518 / 46RE / 47RE] (Overdrive) (4 Gear) (Straight Teeth)	1	
580	12656C	Planet, [A518 / 46RE / 47RE] (Overdrive) (4 Gear) (15 Degree Teeth) 1995-Up (Sun Gear Has 1-ID Groove)	1	4798520
580	K12656C	Planet Kit, [A518 / 46RE / 47RE] (Overdrive) (4 Gear) (5 Degree Teeth) 1995-Up (Sun Gear 1-ID Groove) (#220 to #580)	1	4874392
580	12656D	Planet Kit, [A518] (Overdrive) (5 Gear) (22 Degree Teeth) 1989-94 (Sun Gear No ID Groove)	1	
580	12656A	Planet, [A518 / A618 / 46RE / 47RE] (Overdrive) (5 Gear) (Straight Teeth)	1	4461121
580	12656B	Planet, [A518 / 46RE / 48RE] (Overdrive) (5 Gear) (15 Degree Teeth) 1995-Up (Sun Gear 1-ID Groove)	1	
580	K12656B	Planet Kit, [A518 / 46RE / 48RE] (Overdrive) (5 Gear) (15 Degree Teeth) 1995-Up (Sun Gear 1-ID Groove) (#220 to #580)	1	4874396
580	K12656BR	Planet Kit, [A518 / 46RE / 48RE] (Overdrive) (5 Gear) (15 Degree Teeth) 1990-Up (Includes: Planet, Ring Gear, Sun Gear & Plate) (*Will Retro for All A518's)	1	
580	K12656D	Planet Kit, [A518] (Overdrive) (5 Gear) (22 Degree Teeth) 1995-Up (*Retros When Used With 22 Degree Ring Gear)	1	
582	22133	Planet, [A727] (Forward) (3 Gear) (With 1st Design Splines) 1965-75	1	

582	22133A	Planet, [A727 / A518] (Forward) (3 Gear) (With 2nd Design Splines) 1976-Up	1	4028110
582	22134	Planet, [A727] (Forward) (4 Gear) (With 1st Design Splines) 1965-75	1	
582	22134A	Planet, [A727 / A518 / A618] (Forward) (4 Gear) (With 2nd Design Splines) 1976-Up	1	4028120
582	22134C	Planet, [A518 / A618 / 46RE / 47RE] (Forward) (5 Gear) (Aluminum) (With 3rd Design Splines) (Thick Splines) 1996-Up	1	
582	22134B	Planet, [A518 / A618 / 46RE / 47RE] (Forward) (5 Gear) (Steel) (With 3rd Design Splines) (Thick Splines) 1996-Up	1	4617998
582	22134E	Planet, [A618 / 48RE] (Forward) (6 Gear) (Steel) 2003-Up	1	52854033AA
584	22753	Planet, [A727 / A518 / 46RE / 47RE] (Rear) (3 Gear) 1965-Up	1	2466539
584	22753A	Planet, [A727 / A518 / 46RE / 47RE] (Rear) (4 Gear) 1965-Up	1	2801061
584	22753B	Planet, [A618 / 48RE] (Rear) (6 Gear) 2003-Up	1	52854140AA
590	12658	Ring Gear, [A518] (Overdrive Planet) (Angled Teeth) 1989-94 (No ID Groove Between Park & Drum Lugs)	1	4461012
590	12658A	Ring Gear, [A518 / 46RE / 48RE] (Overdrive Planet) (Straight Teeth)	1	4461130
590	12658C	Ring Gear, [A518 / 46RE / 48RE] (Overdrive) (15 Degree Teeth) (1-ID Groove Between Park & Drum Lugs)	1	4761010
592	22137	Ring Gear, [A727 / A518 / A618 / 46RE / 47RE] (Front Planet) (58 Teeth) 1965-Up	1	2892656
592	22137A	Ring Gear, [A618 / 48RE] (Front Planet) (92 Teeth) 2003-Up	1	52854043AA
594	22152	Ring Gear, [A727 / A518 / A618 / 46RE / 47RE] (Rear Planet) (Annulus) 1965-Up	1	4810002AB
594	22152A	Ring Gear, [A618 / 48RE] (Rear Planet) (Annulus) 2003-Up (*Flat Where #252 Washer Rides)	1	52854074AA
610	12655	Sun Gear, [A518] (Overdrive) (22 Degree Angled Teeth) 1989-94	1	4461022
610	12655A	Sun Gear, [A518 / 46RE / 48RE] (Overdrive) (Straight Teeth)	1	4461127
610	12655C	Sun Gear, [A518 / 46-48RE] (Overdrive) (15 Degree Angled Teeth) (With ID Groove in Middle of Gear) 1995-Up	1	4778742
612	22141	Sun Gear, [A727 / A518 / A618 / 46RE / 47RE] (Forward & Rear Planet) (*Fits the Thin Shell) (No Groove) 1965-Up	1	2801311
612	22141A	Sun Gear, [48RE] (Forward & Rear Planet) (*Fits the Thick Shell) (1-Groove) 2003-Up	1	52854048AA
622	22145	Shell, [A727 / A518 / A618 / 46RE / 47RE] (Driving) (With 3-Holes For Washer) 1962-95	1	4617978
622	22145A	Shell, [A518 / A618 / 46RE / 47RE] (Driving) (6-Holes For Washer) (.175" Thick at the Lugs) 1996-Up	1	
622	22145B	Shell, [A618 / 48RE] (Driving) (6-Holes For Washer) 2003-Up (.240" Thick at the Lugs)	1	52854056AA
634	22754	Support, [A727] (Output Shaft) (4-Bolt) 1962-89	1	2466882
634	22755	Support, [A727] (Output Shaft) (6-Bolt) 1990-Up	1	52118245
634	A22754N	Support, [A518] (Piston Retainer) (Universal) (Governor Feed Holes With 2-Plugs) 89-Up	1	52118180
634	22754N-01K	Support, [A518] (Piston Retainer) (Standard Diameter) 1988-Up **(*No Machining Required)**	1	Sonnax
634	22754N-02K	Support, [A518] (Piston Retainer) (Oversize) 1988-Up **(*Reverse Drum Must Be Machined)**	1	Sonnax
634	22754N	Support, [A518] (Piston Retainer) (With Governor Feed Holes) 1989-Up (*Can Use A22754N)	1	52118180
634	22754P	Support, [A518] (Piston Retainer) (Without Governor Feed Holes) 1996-Up (*Can Use A22754N)	1	52117975
		SPRAGS & ONE WAY CLUTCHES		
650	12865	Sprag, [A518 / A618] (Overrun Clutch) (Overdrive) 1990-Up	1	4461015
654	K22960	Sprag, [A727 / A518] (Rear Spring & Roller Kit) (12-Rollers) 1962-90	1	
654	12960N	Sprag, [A727 / A518 / A618 / 46RE / 48RE] (Rear) (14-Rollers With Plastic Cage) 1991-Up	1	4617199
660	12657	Inner Race, [A518 / A618] (Overdrive Sprag) 1990-Up	1	4461124
664	22750	Inner Race, [A727 / A518] (Rear Sprag) (12-Roller Type) 1962-90	1	3420100
664	22750L	Inner Race, [A727 / A518 / A618] (Rear Sprag) (14-Roller Type) 1991-Up	1	Sonnax
665	22751	Outer Race, [A727 / A518] (Rear Sprag) (12-Rollers Type) 1962-90	1	
665	K22961M	Outer Race Kit, [A727 / A518] (Rear Sprag) (12-Roller) (Bolt In) 1962-90	1	

665	22751N	Outer Race, [A727 / A518 / A618] (Rear Sprag) (14-Roller Type) 1991-Up	1	4471473
		HARD PARTS (Continued)		
670	22119	Input Shaft, [A727] (Non Lock-Up) (24-Spline) 1967-77	1	
670	22120	Input Shaft, [A727 / A518] (Non Lock-Up) (24-Spline) 1978-Up (1-1/8"OD Stator Bushing Land)	1	
670	22121	Input Shaft, [A727] (Lock-Up) (23-Spline) (With Bushing) 1978-89	1	
670	22121A	Input Shaft, [A727 / A518] (Lock-Up) (No Bushing) 1990-Up (1-1/8"OD Stator Bushing Land)	1	
670	22121C	Input Shaft, [A518 / A618 / 46RE / 48RE] (Lock-Up) (No Bushing) 1994-Up (1-1/4"OD Stator Bushing Land)	1	4617396
674	22171A	Shaft, [A518 / A618] (Intermediate) 1990-93 (2nd Design Splines) (1-Small Hole Between the 2-Overdrive Sun Gear Bushings) (*Can Use 22171B)	1	4471504
674	22171B	Shaft, [A518 / A618] (Intermediate) 1994-95 (2nd Design Splines) (2-Small Holes Between the 2-Overdrive Sun Gear Bushings)	1	
674	22171C	Shaft, [A518 / A618 / 46RE / 48RE] (Intermediate) 1996-Up (3rd Design Splines) (Thick Splines)	1	4617611
678	22163	Output Shaft, [A727] (2WD) (27" Long) 1966-75	1	
678	22167	Output Shaft, [A727] (2WD) (27" Long) (.618" Pilot) 1976-89	1	
678	22167A	Output Shaft, [A727] (2WD) (27" Long) (.345" Pilot) 1990-Up	1	
678	22167B	Output Shaft, [A727] (2WD) (27" Long) (.618" Pilot) 1976-89 (Bolt-on Yoke)	1	
678	22170A	Output Shaft, [A727] (2WD) (21" Long) 1966-75	1	
678	22170	Output Shaft, [A727] (2WD) (21" Long) (.618" Pilot) 1976-89	1	
678	22169	Output Shaft, [A727] (4x4) (17" Long) (International)	1	
678	22754F	Output Shaft, [A727] (2WD) (16-3/4" Long) (.618" Pilot) (Bolt-on Yoke) 1976-89	1	
678	22754FA	Output Shaft, [A727] (2WD) (16-3/4" Long) (.345" Pilot) (Bolt-on Yoke) 1990-Up	1	
678	22169A	Output Shaft, [A727] (2WD) (17" Long) (.345" Pilot) (Bolt-on Yoke) 1990-Up	1	
678	22168A	Output Shaft, [A727] (4x4) (13-1/2") (*Jeep) (2-3/4" to Snap Ring Groove From End of Shaft)	1	
678	12160N	Output Shaft, [A518 / A618] (2WD) (1-1/16" Long Key Way Slot) (16-1/4" Long) 1990-Up	1	
678	22173A	Output Shaft, [A518 / A618] (2WD) (1-7/16" Long Key Way Slot) (16-1/4" Long) 1990-Up	1	
678	22173B	Output Shaft, [A518 / A618 / 46RE / 48RE] (2WD) (13 Teeth Speed-O Gear) (No Key Way) (16-1/4" Long) 1990-Up	1	
678	22173BA	Output Shaft, [A518 / A618 / 46RE / 48RE] (2WD) (No Speed-O Gear) (No Key Way) (16-1/4" Long) 1990-Up	1	
678	22754A	Output Shaft, [A727] (4x4) (13-1/4") (*Jeep) (3" to Snap Ring Groove From End of Shaft)	1	
678	22173	Output Shaft, [A518 / A618] (4x4) (9-1/4" Long) (1-1/16" Long Key Way Slot) 1990-Up	1	
678	22173C	Output Shaft, [A518 / A618 / 46RE / 48RE] (4x4) (9-1/4" Long) (1-7/16" Long Key Way Slot) 1990-Up	1	
678	22172	Output Shaft, [A727] (4x4) (16-1/4") (3-5/8" to Snap Ring Groove From End of Shaft)	1	
678	22173D	Output Shaft, [A518 / A618] (4x4) (5-1/4") (1-1/8" Long Splines) (W/Pilot on Rear of Shaft) 1990-Up	1	
678	22173DA	Output Shaft, [A518 / A618] (4x4) (5-1/4" Long) (1-7/8" Long Splines) 1990-Up	1	
678	22172A	Output Shaft, [A727] (4x4) (16-1/4" Long) (3-1/4" to Snap Ring Groove From End of Shaft)	1	
678	22754C	Output Shaft, [A727] (4x4) (17-1/2" Long) (4-3/4" to Snap Ring Groove From End of Shaft)	1	
678	22171A-02K	Pin/Plug Kit, [A727 / A518/A618 (Pilot Pin) (*Goes Into the Output Shaft on [A727] or Intermediate Shaft on [A518 / A618) (With Orifice Cup Plug for Rear of Shaft) 1990-Up	1	Sonnax
680	22204	Governor, [A727] (Large Valve Is 1.002"OD) 1962-Up	1	
680	22204A	Governor, [A727] (Large Valve Is 1.070"OD) 1962-Up	1	
680	12802A	Governor, [A518] (Large Valve Is Steel) (Gas) 1989-93	1	

680	12802D	Governor, [A518] (Large Valve Is Brass) (Diesel) 1989-93	1	
680	22803	Valve, [A518] (Governor) (Large, Steel)	1	Superior
680	12802-01	Valve, [A518] (Governor) (Large, Aluminum)	1	Sonnax
685	12800	Support, [A518] (Governor) (3-Ring)	1	4461009
685	22765	Support, [A727] (Governor) 1966-Up	1	
697	12801	Retainer, [A518 / A618] (Governor Support) 1990-Up	1	4461002
		VALVE BODIES (REBUILT)		
740	CR-2720	Valve Body, [A727] (Non Lock-Up) 1978-Up	1	
740	CR-2721	Valve Body, [A727] (Non Lock-Up) (No Solenoid) 1978-Up	1	
740	CR-2722	Valve Body, [A727] (Lock-Up) (1-Wire Solenoid) 1987-Up	1	
740	CR-2723	Valve Body, [A727] (Lock-Up) (2-Wire Solenoid) 1994-Up	1	
		A518 HYDRAULIC		
740	CR-2724	Valve Body, [A518] (With 1-Solenoid) (Without Boost Tube)	1	
740	CR-2725	Valve Body, [A518] (With 1-Solenoid) (With Boost Tube)	1	
740	CR-2726	Valve Body, [A518] (With 2-Solenoids) (Without Boost Tube) (Without Boost Valve)	1	
740	CR-2726B	Valve Body, [A518] (With 2-Solenoids) (Without Boost Tube) (With Boost Valve)	1	
740	CR-2727	Valve Body, [A518] (With 2-Solenoids) (With Boost Tube)	1	
		A518 ELECTRONIC (46RE / 47RE / 48RE)		
740	CR-2728	Valve Body, [46RE / 47RE] (Round Early Governor Pressure Sensor) (*Early Style Manual Lever) 1995-99	1	
740	CR-2730	Valve Body, [46RE / 47RE] (Square Late Governor Pressure.Sensor) (*Early Style Manual Lever) 2000-Up	1	
740	CR-2732	Valve Body, [46RE / 47RE] (Square Late Governor Pressure Sensor) (*Late Style Manual Lever) 2000-Up	1	
740	CR-2733	Valve Body, [48RE] (Square Late Governor Pressure Sensor) (*Late Style Manual Lever) 2003-Up	1	
		VALVE BODIES		
740	22770	Valve Body, [A727] (Non Lock-Up) 1972-Up	1	
740	22770A	Valve Body, [A727] (Non Lock-Up) 1967-71	1	
740	22771L	Valve Body, [A727] (Lock-Up) 1978-Up	1	
740	22771N	Valve Body, [A727] (Non Lock-Up) 1978-Up	1	
740	22771LD	Valve Body, [A727] (Lock-Up) (Diesel) 1978-Up	1	
740	22771A	Valve Body, [A518 / A618] (Non Lock-Up) (With 1-Solenoid) 1990-94	1	
740	22771D	Valve Body, [A518 / A618] (Non Lock-Up) (With Solenoid & Boost Valve Tube) 1990-94	1	
740	22771B	Valve Body, [A518 / A618] (Lock-Up) (With 2-Solenoids & Boost Valve Tube) 1990-94	1	
740	22771C	Valve Body, [A518 / A618] (Lock-Up) (With 2-Solenoids & No Boost Valve Tube) 1990-94	1	
740	22771E	Valve Body, [A518 / A618 / 46RE / 47RE] (3-Solenoids & 1-Round Sensor) (4-Prong Governor Solenoid) 1996-99	1	
740	22771EC	Valve Body, [A518 / A618 / 46-47RE] (3-Solenoids & 1-Square Sensor) (4-Prong Governor Solenoid) 2000-Up (*Uses 3-Prong Screw-In Neutral Safety Switch)	1	
740	22771V	Valve Body, [48RE] (With 3-Solenoid & 1-Square Sensor) (4-Prong Governor Solenoid) 2003-Up (*Uses a Push-In Neutral Safety Switch)	1	
		VALVE BODY COMPONENTS		
741	22229-03	Neutral Safety Back-Up Insulator, [A727 / A518 / 46RE / 47RE] (*Replaces Plastic Piece on Manual Lever) 1969-00	1	Sonnax
741	22229-07K	Neutral Safety Back-Up Insulator, [46RE / 47RE / 48RE] (*Replaces Plastic Piece on Manual Lever) 2001-Up	1	Sonnax

741	K22229A	Rooster Comb, [A727] (Has No Plastic Insulator for Neutral Safety Switch) 1965-E70	1	
741	K22229B	Rooster Comb, [A727] (Has Long Plastic Insulator for Neutral Safety Switch) L1970-77	1	
741	K22229C	Rooster Comb, [A727] (Has Long Plastic Insulator for Neutral Safety Switch) 1978-88	1	
741	K22229D	Rooster Comb, [A727 / A518 / A618 / 46RE / 47RE] (Long Plastic Insulator for Screw-In Neutral Safety Switch) 1989-01	1	
741	K22229F	Rooster Comb, [48RE] (Short Plastic Insulator for Push-in Neutral Safety Switch) 2001-Up	1	
741	22771A-01	Switch Valve, [A518 / A618 / 46RE / 47RE] (*Prevents Lock-Up Shudder)	1	Sonnax
741	10000-09	Check Ball, [A727 / A518 / A618] (11/32")	1	Torlon
741	22771A-13	Switch Valve, [A518 / 46RE / 47RE] (Oversize) **(*Must Use Reamer 22771A-TL13)**	1	Sonnax
	22771A-TL13	Reamer Set, (*For 22771A-13)	1	Sonnax
741	22999-01	Retainers, [A518 / A618 / 46RE / 48RE] (TCC Boost Valve Spring) (5-Pieces)	1	Sonnax
741	K065	Plate, [A518 / A618 / 46RE / 48RE] (TCC Boost Valve) (With Retainer to Hold Spring In)	1	Superior
741	K12790	Spring Kit, [A727] (Lock-Up Delay) (Spring & Plate)	1	
741	22771-14K	Plug Kit, [A727 / A518 / A618] (Valve Body Governor Bore) (1-2 Governor Plug, 2-3 Governor Plug & 3-Teflon Seals)	1	Sonnax
741	22771-09	Manual Valve, [A727 / A518 / 46RE / 48RE] (*Allows Converter Charge In Park)	1	Sonnax
741	22771-HDK	Throttle Valve Kit, [A727 / A518 / A618 / 46RE / 47RE] (HI-Performance)	1	Sonnax
741	22771-01K	Throttle Valve Kit, [A727 / A518 / A618 / 46RE / 47RE] (Oversize) (Valve, Plunger, Springs & Sleeve)	1	Sonnax
741	22771-02K	Throttle Valve Kit, [A727 / A518 / A618 / 46RE / 47RE] (Oversize) (Valve, Plunger, Springs & Sleeve) **(*Requires: F-22771-TL Reamer & VB-FIX)**	1	Sonnax
741	22229-01K	Sleeve & Plug, [A727 / A518 / A618 / 46RE / 47RE] (Line Pressure) (.200"OD Plug)	1	Sonnax
741	22229-04K	Sleeve & Plug Kit, [A727 / A518 / A618 / 46RE / 47RE] (Line Pressure) (.264"OD Plug)	1	Sonnax
741	SC46/47RHE	Sure Cure Kit, [A518 / A618 / 46RE / 47RE]	1	Sonnax
741	22771A-10K	Valve, [A727] (Lube Pressure Regulated Valve) (*Reduces Converter Drain Back)	1	Sonnax
747	TF-PLT-94S	Plate, [A518 / A618] (Valve Body) (Without Boost Tube) 1988-97	1	Transgo
747	TF-PLT-95B	Plate, [A518 / A618] (Valve Body) (With Lock-Up Boost Tube Type) 1993-03	1	Transgo
747	TF-PLT-48RE	Plate, [48RE] (Valve Body) (Diesel & V-10) 2003-06	1	Transgo
741	12861-01	Spring, [A518 / A618 / 46RE / 48RE] (3-4 Accumulator) (.122"OD Wire) (2.350" Long)	1	Sonnax
		HARD PARTS (Continued)		
760	22178P	Case, [A727] (225) (6 Cylinder) (Push Button) 1962-65	1	
760	22173	Case, [A727] (273 / 318) (Push Button) 1962-65	1	
760	22174	Case, [A727] (383 / 413 / 426 / 440) (Push Button) 1962-65	1	
760	22179A	Case, [A727] (225) (6 Cylinder) 1966-71	1	
760	22179B	Case, [A727] (225) (6 Cylinder) (Non Lock-Up) 1972-77	1	
760	22179Y	Case, [A727] (225) (6 Cylinder) (Lock-Up) (4-Bolt Support) 1978-Up	1	
760	22180B	Case, [A727] (Slant 6) (Van) (With Timming Hole In Bell)	1	
760	22179	Case, [A727] (318 / 360) 1966-77	1	
760	22179D	Case, [A727] (318 / 360) (Non Lock-Up) 1978-89	1	
760	22179DA	Case, [A727] (318 / 360) (Lock-Up) 1978-89	1	
760	22179DB	Case, [A727] (318 / 360) (Lock-Up) (6-Bolt Support) 1990-Up	1	
760	22179DC	Case, [A727] (318 / 360) (Lock-Up) (6-Bolt Support) (With Cut Out Bell) 1990-Up	1	
760	22177	Case, [A727] (318 / 360) (Van) (With Timming Hole In Bell)	1	
760	22178	Case, [A727] (400 / 440) (Non Lock-Up) 1966-77	1	
760	22179G	Case, [A727] (400 / 440) (Non Lock-Up) 1978-88	1	
760	22178A	Case, [A727] (400 / 440) (Van) (With Timming Hole In Bell)	1	

760	22179GA	Case, [A727] (400 / 440) (Lock-Up) 1978-88	1	
760	22179Z	Case, [A727] (International Truck)	1	
760	22180	Case, [A727] (AMC) (Non Lock-Up)	1	
760	22180A	Case, [A727] (AMC) (Lock-Up)	1	
760	22178C	Case, [A727] (Diesel) (Cummins) (6-Bolt Support) 1989-Up	1	
760	22178M	Case, [A727] (Diesel) (4 Cylinder) (Mitsubishi)	1	
760	22179M	Case, [A518] (318 / 360) (12-Roller Type Sprag) 1990	1	
760	22179L	Case, [A518] (318 / 360) (14-Roller Sprag) (2.812"OD Rear Servo) (.900"OD Case Connector) (Driver Side Starter) (16-Round Holes in Bell) 1991-95	1	
760	22179LA	Case, [A518 / 46RE / 47RE] (318 / 360) (14-Roller Sprag) (Screw In Neutral Safety Switch) (1.080"OD Case Connector) (Driver Side Starter) (16-Round Holes in Bell) 1995-00	1	
760	22179LB	Case, [A518 / 46RE / 47RE] (318 / 360) (14-Roller Sprag) (Push In Neutral Safety Switch) (1.080"OD Case Connector) (Driver Side Starter) (16-Round Holes in Bell) 2001-Up	1	
760	22179LC	Case, [A518] (318 / 360) (14-Roller Sprag) (2.812"OD Rear Servo) (.900"OD Case Connector) (Driver Side Starter) (17-Round Holes in Bell) (With Cut Out for Dust Cover) (Dakota / Durango) 1991-95	1	
760	22179LD	Case, [A518 / 46RE / 47RE] (318 / 360) (14-Roller Sprag) (Screw-In Neutral Safety Switch) (1.080"OD Case Connector) (Driver Side Starter) (17-Round Holes in Bell) (With Cut Out for Dust Cover) (Dakota / Durango) 1995-00	1	
760	22179LE	Case, [A518 / 46RE / 47RE] (318 / 360) (14-Roller Sprag) (Push-In Neutrul Safety Switch) (1.080"OD Case Connector) (Driver Side Starter) (17-Round Holes in Bell) (With Cut Out for Dust Cover) (Dakota / Durango) 2001-Up	1	
760	22179N	Case, [A518] (Diesel) (14-Roller Sprag) (2.812"OD Rear Servo) (.900"OD Case Connector) 1991-94	1	
760	22179R	Case, [A618] (Diesel) (14-Roller Sprag) (2.479"OD Rear Servo) (.900"OD Case Connector) 1991-94	1	
760	22179P	Case, [A518 / 47RE] (Diesel) (14-Roller Sprag) (2.812"OD Rear Servo) (1.080"OD Case Connector) 1995-00	1	
760	22179RA	Case, [A618 / 47RE] (Diesel) (14-Roller Sprag) (2.479"OD Rear Servo) (1.080"OD Case Connector) (No Threaded Boss on Bell for Shift Cable Bracket) 1995-00	1	
760	22179RB	Case, [A618 / 47RE] (V-10 & Diesel) (1-Roller Sprag) (2.479"OD Rear Servo) (1.080"OD Case Connector) (1-Threaded Boss on Bell for Shift Cable Bracket) 1995-00	1	
760	22179V	Case, [47RE / 48RE] (Diesel) (14-Roller Sprag) (2.479"OD Rear Servo) (1.080"OD Case Connector) (With 1-Threaded Boss on Bell for Shift Cable Bracket) (Push-in Neutral Safety Switch) 2001-04 (*Also V-10 2001-Up)	1	52118758AB
760	22179VA	Case, [47RE / 48RE] (Diesel) (14-Roller Sprag) (2.479"OD Rear Servo) (1.080"OD Case Connector) (No Threaded Boss on Bell for Shift Cable Bracket) (Push-in Neutral Safety Switch) 2001-04 (*Also V-10 2001-Up)	1	
760	22179W	Case, [48RE] (Diesel) (2-Bosses on Side of Case For Throttle Actuator Motor) 2005-06	1	
760	22179S	Case, [A518] (318 / 360) (14-Roller Sprag) (2.812"OD Rear Servo) (900"OD Case Connector) (Passenger Side Starter) 1991-94	1	
760	22179SA	Case, [A518 / 46RE / 47RE] (318 / 360) (14-Roller Sprag) (2.812"OD Rear Servo) (1.080"OD Case Connector) (Passenger Side Starter) 1995-00	1	
		CASE COMPONENTS		
	22179-02	Sleeve, [A727 / A518 / 46RE / 48RE] (Shift Linkage Shaft) **(*Use With 56361-TL)**	1	Sonnax
	56361-TL	Tool Kit, (*For 22179-02)	1	Sonnax
761	22099	Sleeve, [A518 / A618] (Presses Into Case Connector Hole on Late Model Cases) (With 1.080"OD Hole to Convert the Case Into an Early Model Case With .900"OD Hole)	1	
761	22179-06K	Sleeve Adapter Kit, [A518 / A618 / 46RE / 47RE] (Neutral Safety Switch) (Sleeve With O-Ring & Washer Makes 2001-Up) (*Case Fits Early Type Cases With 3-Prong Neutral Safety Switch)	1	Sonnax
		HARD PARTS (Continued)		
765	22182	Pan, [A727] (Shallow) 1962-Up	1	
765	22182A	Pan, [A518] (Deep) (Flat Bottom) 1990-94	1	4428462

765	22182B	Pan, [A518 / 46RE / 47RE] (Deep) (Ribbed With Dip For Filter) 1995-Up	1	
765	22182C	Pan, [A618 / 46RE / 47RE] (Deep) (Flat Bottom) (Ribbed) (3.135" Deep) 1998-Up	1	52118780AD
770	22205	Extension Housing, [A727] (2WD) (18-1/2") (Without Weight Bracket Holes) (Snap Ring Retainer on Bottom of Housing) 1962-Up	1	
770	22205A	Extension Housing, [A727] (2WD) (18-1/2") (With Weight Bracket Holes) 1962-Up	1	
770	22205G	Extension Housing, [A727] (2WD) (18-1/2") (Without Weight Bracket Holes) (Snap Ring Retainer on Side of Housing)	1	
770	22205P	Extension Housing, [A727] (2WD) (Push Button) (Bolt-on Flange) 1962-64	1	
770	22205PA	Extension Housing, [A727] (2WD) (Push Button) (Slip-on Yoke) 1965	1	
770	12205C	Extension Housing, [A518] (2WD) (With Speed-O) (No Sensor) (21-1/2" Long)	1	
770	K12999C	Overdrive Assembly, [A518] (2WD) (Governor Type) (With Speed-O) (No Sensor) (4 Gear Planet)	1	
770	22205B	Extension Housing, [A727] (2WD) (8" Long) (Bolt-on Yoke Type) (2-1/2"OD Rear Seal)	1	
770	22205BA	Extension Housing, [A727] (2WD) (8-1/4" Long) (Bolt-on Yoke Type) (2-3/4"OD Rear Seal)	1	
770	22205K	Extension Housing, [A518 / A618] (4x4) (15-7/8" Long) (No Speed-O) (No Sensor) (*Uses a Rear Seal) (2-Bolt Mount) (*Can Use 22205N)	1	
770	K12999K	Overdrive Assembly, [A518 / A618] (4x4) (15-7/8" Long) (Governor Type) (No Speed-O) (No Sensor) (*Uses a Rear Seal) (2-Bolt Mount) (*Can Use K129999M or K129999N)	1	
770	22205C	Extension Housing, [A727] (4x4) (10-1/4" Long) (Cast Iron)	1	
770	22205M	Extension Housing, [A518 / A618] (4x4) (15-7/8" Long) (No Speed-O) (No Sensor) (*Uses a Rear Seal) (3-Bolt Mount) (*Can Use a 22205N)	1	
770	K12999M	Overdrive Assembly, [A518 / A618] (4x4) (15-7/8" Long) (Governor Type) (No Speed-O) (No Sensor) (*Uses a Rear Seal) (3-Bolt Mount) (*Can Use K12999N)	1	
770	22205N	Extension Housing, [A518 / A618] (4x4) (15-7/8") (No Speed-O) (No Sensor) (*Uses Rear Seal) (5-Bolt Mount)	1	
770	K12999N	Overdrive Assembly, [A518 / A618] (4x4) (15-7/8") (Governor Type) (No Speed-O) (No Sensor) (*Uses a Rear Seal) (5-Bolt Mount)	1	
770	22205D	Extension Housing, [A727] (4x4) (8-1/2" Long) (Cast Iron)	1	
770	12205E	Extension Housing, [A518 / A618 / 46RE / 47RE] (2WD) (No Governor) (With Speed-O) (With Sensor) (21-1/2")	1	
770	K12999E	Overdrive Assembly, [A518 / A618 / 46RE / 47RE] (2WD) (No Governor) (With Speed-O) (With Sensor) (4 Gear Planet)	1	
770	12205F	Extension Housing, [A518 / A618 / 46RE / 47RE] (2WD) (No Governor) (No Speed-O) (With Sensor) (21-1/2")	1	
770	12205V	Extension Housing, [A618 / 48RE] (2WD) (No Speed-O) (With Sensor) 2003-Up (2.985"OD Rear Seal)	1	
770	K12999F	Overdrive Assembly, [A518 / A618 / 46RE / 47RE] (2WD) (No Governor) (No Speed-O) (With Sensor) (4 Gear Planet)	1	
770	122205JA	Extension Housing, [A518 / A618 / 46RE / 47RE] (4x4) (10-7/8") (No Speed-O) (With Sensor) (*Can Use 22205J)	1	
770	K12999JA	Overdrive Assembly, [A518 / A618 / 46RE / 47RE] (4x4) (10-7/8" Long) (No Governor) (No Speed-O) (With Sensor) (Output Shaft Splined to End) (No Side Mount) (*Can Use K12299J)	1	
770	K12999JB	Overdrive Assembly, [A518 / A618 / 46RE / 47RE] (4x4) (10-7/8" Long) (No Governor) (No Speed-O) (With Sensor) (With 1/2" Pilot on End of Shaft) (With Side Mount)	1	
770	22205V	Extension Housing, [48RE] (4x4) 2003-Up	1	
770	22205J	Extension Housing, [A518 / A618 / 46RE / 47RE] (4x4) (10-7/8" Long) (No Governor) (Holds 4 or 6 Overdrive Clutches) (Speed Sensor) (2-Mounting Bosses on Driver Side) (Casting #17903)	1	
770	K12999J	Overdrive Assembly, [A518 / A618 / 46RE / 47RE] (4x4) (10-7/8" Long) (No Governor) (Holds 4 or 6 Overdrive Clutches) (Speed Sensor) (2-Mounting Bosses on Driver Side) (Casting #17903)	1	
770	22205JC	Extension Housing, [A518 / A618 / 46RE / 47RE] (4x4) (10-7/8") (No Governor) (Holds 4 or 6 Overdrive Clutches) (Speed Sensor) (3-Mounting Bosses on Drivers Side & 1-on Passenger Side)	1	

770	K12999JC	Overdrive Assembly, [A518 / A618 / 46RE / 47RE] (4x4) (10-7/8") (No Governor) (Holds 4 or 6 Overdrive Clutches) (Speed Sensor) (3-Mounting Bosses on Drivers Side & 1-on Passenger Side)	1	
770	K22205J	Extension Housing, [46RE / 47RE Style] (4x4) (10-7/8"Long) (*Will Fit [48RE] 2003-Up)	1	
770	22205E	Extension Housing, [A727] (4x4) (6-7/8" Long) (Aluminum)	1	
770	22205F	Extension Housing, [A727] (4x4) (6-5/8" Long) (Aluminum)	1	
770	22205DA	Extension Housing, [A727] (4x4) (8-3/8" Long) (Aluminum)	1	
770	22205H	Extension Housing, [A727] (4x4) (10-1/4" Long) (Aluminum)	1	
771	12802	Cover, [A727 / A518 / A618] (Output Shaft Snap Ring) (With Bolts)	1	
774	12922	Speed-O Housing, [A727 / A518 / A618] (Aluminum) (Cable Type)	1	
774	12922A	Speed-O Housing, [A727 / A518 / A618] (Plastic) (With 3-Round Prong Connectors) (VSS)	1	
774	12922B	Speed-O Housing, [A727 / A518 / A618] (Plastic) (With 3-Flat Blade Connectors) (VSS)	1	
839	34996	Pan Magnet, (Rectangle)	1	
842	12894	Bracket, [A727] (Speed-O Hold Down)	1	
844	12682	Key, [A518 / A618] (Holds Governor Support to Shaft) (Half Moon)	1	
844	12682A	Key, [A518 / A618] (Holds Governor Support to Shaft) (Rectangle)	1	
848	12413	Gear, [A727 / A518 / A618] (Driven Speed-O) (24 Teeth) (With 3" Long Steel Shaft)	1	
848	12416	Gear, [A727 / A518 / A618] (Driven Speed-O) (29 Teeth) (With 1-1/2" Long Steel Shaft)	1	
848	12417	Gear, [A727 / A518 / A618] (Driven Speed-O) (32 Teeth) (With 1-1/2" Long Steel Shaft)	1	
848	12418	Gear, [A727 / A518 / A618] (Driven Speed-O) (34 Teeth) (With 1-1/2" Long Steel Shaft)	1	
848	12420	Gear, [A727 / A518 / A618] (Driven Speed-O) (36 Teeth) (With 1-1/2" Long Steel Shaft)	1	
848	12422	Gear, [A727 / A518 / A618] (Driven Speed-O) (36 Teeth) (With 1-1/2" Long Steel Shaft)	1	
853	22601E	Cushion Spacer, [A727 / A518 / A618 / 46RE / 47RE] (Forward Clutch Spring Spacer)	1	3515077
	K22954	Snap Ring Kit, [A727] 1962-Up	1	28680
	K22954N	Snap Ring Kit, [A518 / 46RE / 48RE] 1990-Up	1	
860	22602	Snap Ring, [A518 / A618 / 46RE / 48RE] (Overdrive Clutch) (Waved)	1	4461066
861	22609	Snap Ring, [A518 / A618 / 46RE / 48RE] (Overdrive Clutch) (Front)	1	4461082
862	22603	Snap Ring, [A518 / A618 / 46RE / 48RE] (Overdrive Clutch) (Flat)	1	4461065
863	22608	Snap Ring, [A518 / A618 / 46RE / 48RE] (Overdrive Direct Drum to Ring Gear)	2	4461060
864	22604	Snap Ring, [A518 / A618 / 46RE / 48RE] (Overdrive Direct Clutch) (Front)	1	4461032
866	22605	Snap Ring, [A518 / A618 / 46RE / 48RE] (Overdrive Sun Gear) (Round)	1	4461064
867	22606	Snap Ring, [A518 / A618 / 46RE / 48RE] (Overdrive Sun Gear) (Flat)	1	4461063
868	22607	Snap Ring, [A518 / A618 / 46RE / 48RE] (Overdrive Ring Gear to Output Shaft)	1	4461059
877	22610	Snap Ring, [A727 / A518 / 46RE / 48RE] (Forward Drum) (Bottom, Wavy)	1	2466806
878	22601	Snap Ring, [A727 / A518 / A618 / 46RE / 48RE] (Forward & Direct Clutch) (.062")	1	1942063
878	22601A	Snap Ring, [A727 / A518 / A618 / 46RE / 48RE] (Forward & Direct Clutch) (.074")	1	1942064
878	22601B	Snap Ring, [A727 / A518 / A618 / 46RE / 48RE] (Forward & Direct Clutch) (.088")	1	1942065
878	22601C	Snap Ring, [A727 / A518 / A618 / 46RE / 48RE] (Forward & Direct Clutch) (.106")	1	2466811
905	K22301B	Servo Assembly, [A727 / A518 / A618 / 46RE / 47RE] (Kickdown) (Large Pin Type) 72-Up	1	
905	K22301A	Servo Assembly, [A727] (Kickdown) (Small Pin Type) 1962-71	1	
906	22891	Spring, [A727 / A518 / A618 / 46RE / 47RE] (Kickdown Servo) (Outer) 1962-Up	1	4617573
906	22891A	Spring, [A727 / A518 / 46RE / 47RE] (Kickdown Servo) (Inner) 1962-Up	1	3410444
907	22301B	Piston, [A727 / A518 / A618 / 46RE / 47RE] (Kickdown Servo) (Large Pin) 1972-Up	1	3410440
907	K080	Piston Set, [A727 / A518 / A618 / 46RE / 47RE] (Kickdown Servo) (Super Servo)	1	Superior
907	22301A	Piston, [A727] (Kickdown Servo) (Small Pin Type) 1962-71	1	

909	22891R	Retainer, [A727 / A518 / A618 / 46RE / 48RE] (Kickdown Servo Spring) (Cover) (Large Pin Type) 1972-Up	1	3410441
910	K22912	Servo Assembly, [A727 / A518] (Reverse Servo) (2.812"OD) 1967-Up	1	
910	K22912A	Servo Assembly, [A618 / 47RE] (Reverse Servo) (Diesel) (2.479"OD)	1	
911	22892	Spring, [A727 / A518] (Rear Servo Return)	1	2801241
912	K029	Piston, [A727 / A518] (Rear Servo) (2.812"OD) 1967-Up (Super Servo)	1	Superior
912	22912	Piston, [A727 / A518 / 46RH / 46RE] (Rear Servo) 1960-03	1	Sonnax
912	22912B	Piston, [A518 / 47RH / 47RE] (Rear Servo) 1994-96	1	Sonnax
912	22912C	Piston, [A518 / A618 / 46RE / 48RE] (Rear Servo) 1997-Up	1	Sonnax
291	22912-01K	Pin/Plug, [A727 / A518 / A618 / 46RE / 48RE] (Reverse Servo) (Contains: Pin/Plug, O-Ring & Retaining Ring)	1	Sonnax
914	22892R	Retainer, [A727 / A518 / A618 / 46RE / 48RE] (Rear Servo Spring) (2.856"OD) (Cupped)	1	
914	22893R	Retainer, [A518 / A618] (Rear Servo Spring) (2.510"OD) (Top Hat)	1	1942150
914	22894R	Retainer, [A618 / 46-48RE] (Rear Servo Spring) (2.525"OD) (Flat) (Diesel)	1	52118342
916	K22689	Strut Assembly, [A727 / A518 / A618 / 46RE / 48RE] (Kickdown Band)	1	
916	K031	Strut, [A727 / A518 / A618 / 46RE / 48RE] (Kickdown Band Apply) (Heavy Duty)	1	Superior
916	22689	Strut, [A727 / A518 / A618 / 46RE / 48RE] (Kickdown Band Anchor) (Pin Side)	1	3743338
917	22900-10	Band Strut, [A518 / A618 / 46RE / 48RE] (Reverse Band) (.100" Longer)	1	Sonnax
917	22900-15	Band Strut, [A518 / A618 / 46RE / 48RE] (Reverse Band) (.150" Longer)	1	Sonnax
919	22691	Adjusting Bolt, [A727 / A518 / A618 / 46RE / 48RE] (Front Band)	1	6036115AA
925	K22841	Accumulator Assembly, [A727 / A518 / A618 / 46RE / 48RE] (Plastic Piston)	1	
926	12893	Spring, [A727 / A518 / A618 / 46RE / 48RE] (Accumulator Return)	1	3515079
927	22841A	Piston, [A727 / A518 / A618 / 46RE / 48RE] (Accumulator) (Aluminum)	1	
927	22841B	Piston, [A727 / A518 / A618 / 46RE / 48RE] (Accumulator) (Aluminum) (With 4-Rings)	1	
927	22841	Piston, [A727 / A518 / A618 / 46RE / 48RE] (Accumulator) (Plastic)	1	
927	22841-01K	Piston/Sleeve Kit, [A727 / A518 / A618 / 46RE / 48RE] (Accumulator) (1-Piston, 2-Seals & Sleeves) **(*No Matching Required)**	1	Sonnax
960	12783	Piston, [A518 / A618 / 46RE / 48RE] (Overdrive Direct Clutch)	1	4431695
964	22861	Piston, [A727 / A518 / A618 / 46RE / 48RE] (Forward Clutch)	1	3743624AB
965	22107	Piston, [A727 / A518 / A618 / 46RE / 48RE] (Direct Clutch)	1	2464651AB
970	12673	Spring, [A518 / A618 / 46RE / 48RE] (Overdrive Clutch Return)	1	4461027
974	22637	Spring, [A727] (Forward Clutch Disc Spring) 1964-73	1	1942015
974	22637A	Spring, [A727 / A518 / A618 / 46RE / 48RE] (Forward Clutch Disc Spring) 1974-Up	1	3743621AB
975	K22580A	Spring Set, [A727 / A518 / A618 / 46RE / 48RE] (Direct Clutch Return) 1967-Up	1	4617205
985	22930	Retainer, [A727 / A518 / A618 / 46RE / 48RE] (Direct Clutch Return)	1	2801949
989	22752	Retainer, [A727 / A518 / 46RE / 47RE] (Rear Sprag) 1962-90	1	2801426
994	22677	Park Rod, [A727] 1962-Up	1	
994	22677A	Park Rod, [A518 / A618 / 46RE / 47RE] 1990-02	1	4471478
994	22677V	Park Rod, [48RE] 2003-Up	1	
995	K22678	Park Pawl Assembly, [A727 / 47RE / 48RE]	1	
996	T22996D	Fitting, [A727 / A618 / 47RE / 48RE] (Cooler Line) (1/2" Line x 1/4" Pipe) (Screw In Flared) (Diesel)	1	52028764AA
996	30155	Fitting, [A727] (Cooler Line) (5/16" Line x 1/8" Pipe) (Screw In Flared)	1	
996	31117C	Fitting, [A518 / A618] (Cooler Line) (1/2" Line x 1/4" Pipe) (Push In) (Diesel)	1	4897792AA
996	26930	Fitting, [A727] (Cooler Line) (90 Degree Elbow) (5/16" Line x 1/8" Pipe) (Screw In Flared)	1	
996	31117	Fitting, [A727 / A518 / A618] (Cooler Line) (3/8" Line x 1/4" Pipe) (1/4" Screw In Flared Male) (on Case Side) (*For Push In Line)	1	

996	22000-01K	Repair Kit, [A727 / A518 / 46RE / 48RE] (Cooler Line Fitting) (With 1/4” Pipe Fittings) (*Fix For Cracked Cases at the Cooler Fittings) (Gas Only*) (Contains: 5-Adapters & 1-Tap Tool) (Adapter # 22000-01)	1	Sonnax
996	22000-01	Adapter, [A727 / A518 / 46RE / 48RE] **(*For 220001-01K Kit)**	1	Sonnax
996	12289	Fitting, [A518] (Cooler Line) (3/8” Line x 1/4” Pipe) (Push In With Wire Type Clip)	1	
996	K057	Clip Kit, [A727 / A518 / A618 / 46RE / 48RE] (Push In Cooler Line) (6-Clips & O-Rings) (*For 1/2” Cooler Lines) (*Prevents Blow Out at Connection)	1	Superior
999	K12679	Tube Set, [A518] (Governor)	1	

45RFE/5-45RFE/68RFE

RWD 4 & 5 Speed

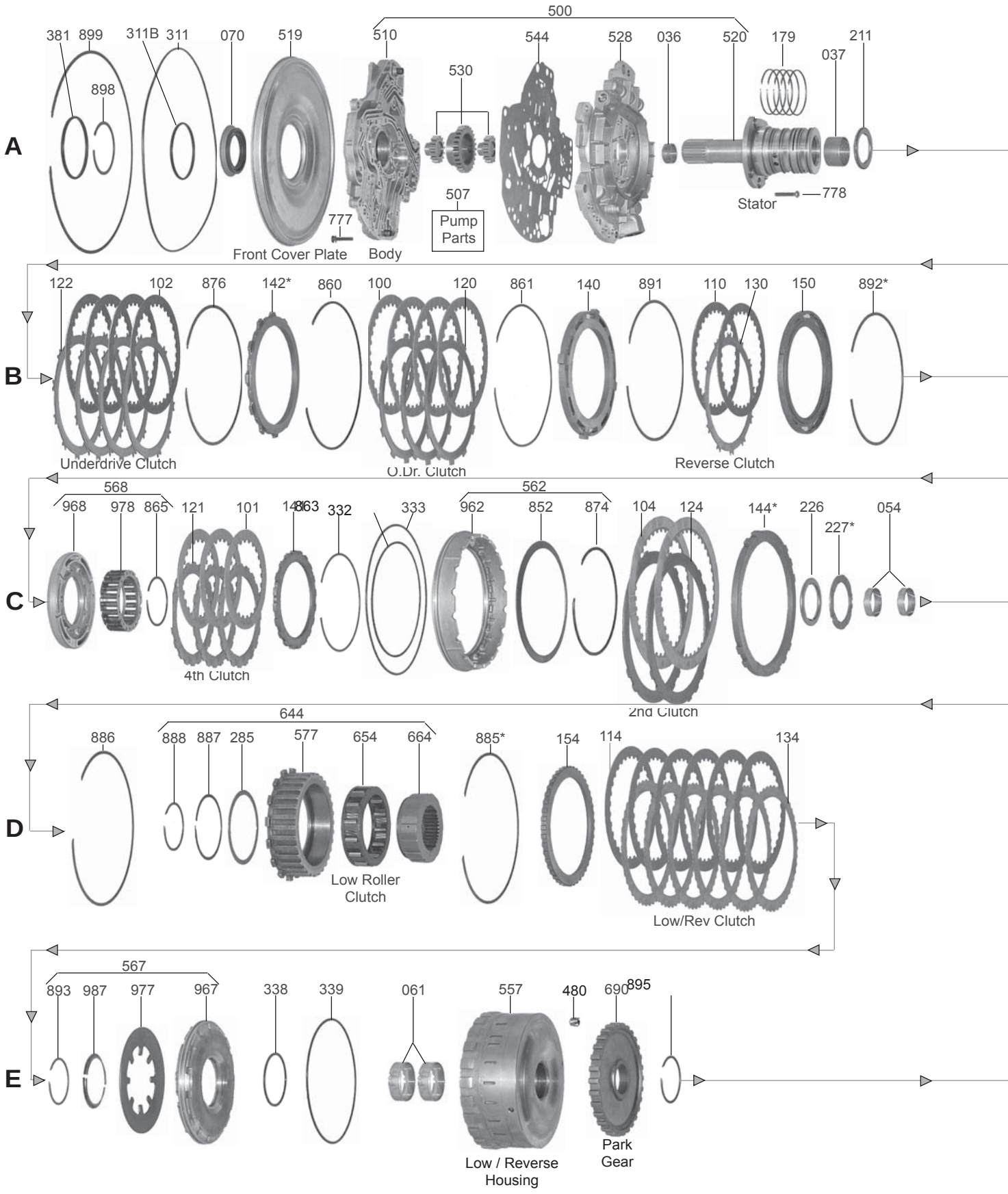

RWD 4 & 5 Speed

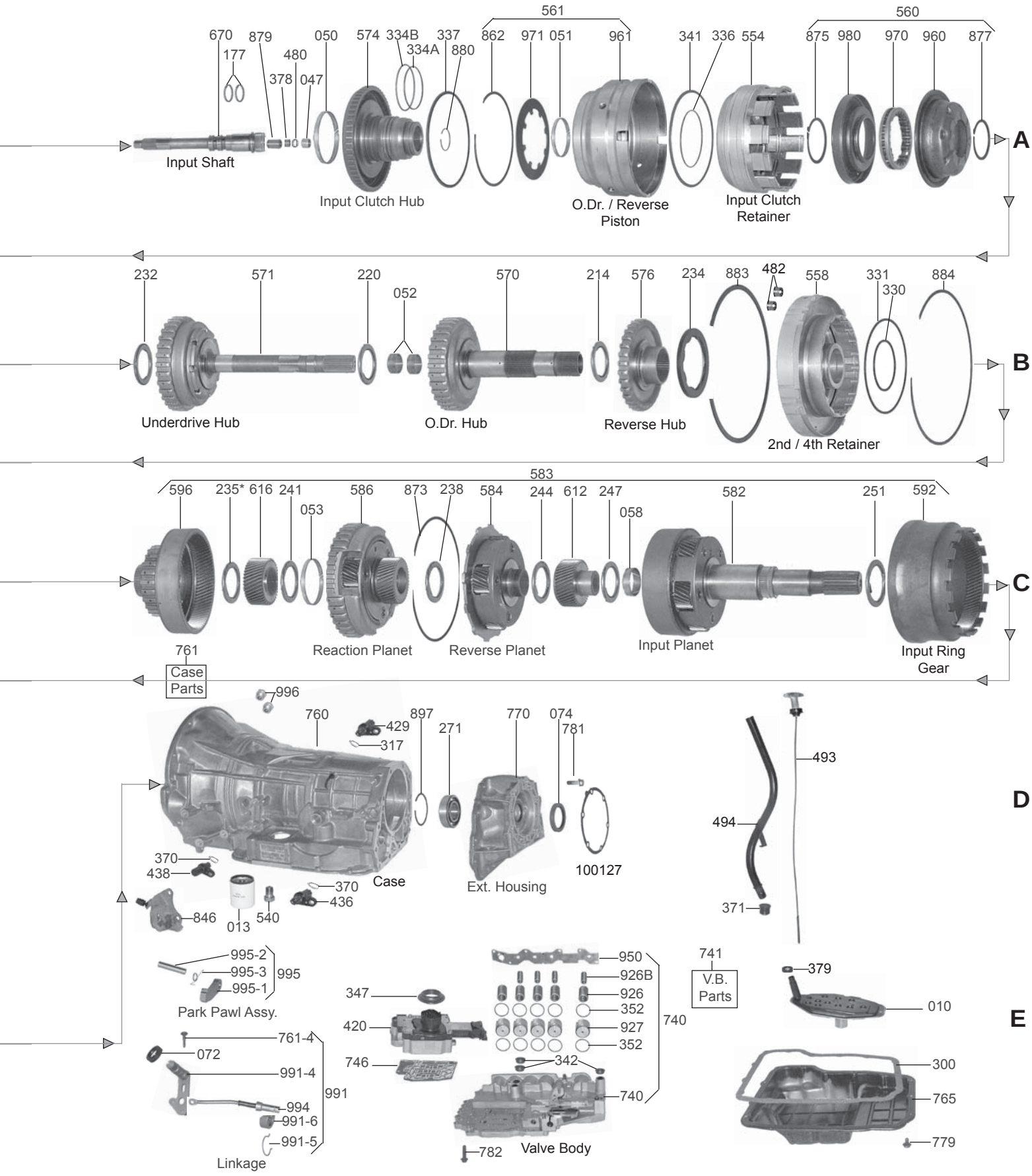
A
670
879
177
480
378
047
050
574
334B
334A
337
880
561
862
971
051
961
341
336
554
560
875
980
970
960
877
Input Shaft
Input Clutch Hub
O.Dr. / Reverse Piston
Input Clutch Retainer
B
232
571
220
052
570
214
576
234
883
482
558
331
330
884
Underdrive Hub
O.Dr. Hub
Reverse Hub
2nd / 4th Retainer
C
583
596
235*
616
241
053
586
873
238
584
244
612
247
058
582
251
592
761
Case Parts
Reaction Planet
Reverse Planet
Input Planet
Input Ring Gear
D
996
760
429
317
897
271
770
074
781
370
438
846
013
540
370
436
Case
Ext. Housing
100127
493
494
371
E
995-2
995-3
995-1
995
Park Pawl Assy.
761-4
072
991-4
994
991-6
991-5
991
Linkage
347
420
746
950
926B
926
352
927
352
342
740
782
Valve Body
741
V.B. Parts
379
010
300
765
779

45RFE/5-45RFE/68RFE

ILL#	PART#	DESCRIPTION	QTY	REF #
		OVERHAUL KITS		
	K44900	Overhaul Kit, [45RFE / 5-45RFE] (Without Bonded Pistons) (4 Speed & 5 Speed) 1999-05	1	
	K44900P	Overhaul Kit, [45RFE / 5-45RFE] (With Bonded Pistons) (4 Speed & 5 Speed) 1999-05	1	
	K44900A	Overhaul Kit, [5-45RFE] (Without Bonded Pistons) (5 Speed) 2006-Up	1	
	K44900AP	Overhaul Kit, [5-45RFE] (With Bonded Pistons) (5 Speed) 2006-Up	1	
	K44900B	Overhaul Kit, [68RFE] (Without Bonded Pistons) (6 Speed) 2007-Up	1	
	K44900BP	Overhaul Kit, [68RFE] (With Bonded Pistons) (6 Speed) 2007-Up	1	
		MASTER L/STEEL KIT		
	DK4400-S	Master L/Steels Kit, [45RFE / 5-45RFE] (Without Bonded Pistons) (4 Speed & 5 Speed) 99-05	1	
	DK4400P-S	Master L/Steels Kit, [45RFE / 5-45RFE] (With Bonded Pistons) (4 Speed & 5 Speed) 1999-05	1	
	DK4400A-S	Master L/Steels Kit, [5-45RFE] (Without Bonded Pistons) (5 Speed) 2006-Up	1	
	DK4400AP-S	Master L/Steels Kit, [5-45RFE] (With Bonded Pistons) (5 Speed) 2006-Up	1	
	DK4400B-S	Master L/Steels Kit, [68RFE] (Without Bonded Pistons) (6 Speed) 2007-Up	1	
	DK4400BP-S	Master L/Steels Kit, [68RFE] (With Bonded Pistons) (6 Speed) 2007-Up	1	
		MASTER W/STEEL KIT		
	DK4400	Master W/Steels Kit, [45RFE / 5-45RFE] (Without Bonded Pistons) (4 Speed & 5 Speed) 1999-05	1	
	DK4400P	Master W/Steels Kit, [45RFE / 5-45RFE] (With Bonded Pistons) (4 Speed & 5 Speed) 1999-05	1	
	DK4400A	Master W/Steels Kit, [5-45RFE] (Without Bonded Pistons) (5 Speed) 2006-Up	1	
	DK4400AP	Master W/Steels Kit, [5-45RFE] (With Bonded Pistons) (5 Speed) 2006-Up	1	
	DK4400B	Master W/Steels Kit, [68RFE] (Without Bonded Pistons) (6 Speed) 2007-Up	1	
	DK4400BP	Master W/Steels Kit, [68RFE] (With Bonded Pistons) (6 Speed) 2007-Up	1	
		FILTER		
010	44710	Filter, [45RFE / 5-45RFE / 68RFE] (2WD) (4-5-6 Speed) 1999-Up (*Sell 44550 Seal Also)	1	4800029AA
010	44710A	Filter, [45RFE / 5-45RFE / 68RFE] (4x4) (4-5-6 Speed) 1999-Up (*Sell 44550 Seal Also)	1	5013470AB
		FILTER KIT		
	FK44710	Filter Kit, [45RFE / 68RFE] (2WD) (4-5-6 Speed) 1999-Up (*Fits Jeep Cherokee 1999-Up) & (*Also Dodge (2WD) 2000-Up)	1	
	FK44710A	Filter Kit, [45RFE / 5-45RFE / 68RFE] (4x4) (4-5-6 Speed) 1999-Up (*Fits Jeep Cherokee 4 Speed & Grand Cherokee 5 Speed) (*Also Fits Dodge 4 Speed (4x4) 2000-Up)	1	
		MISC. FILTERS		
013	44711	Filter, [45RFE / 5-45RFE / 68RFE] (Cooler) (Spin-on) 1999-Up	1	4799662
		BUSHINGS		
	K44901	Bushing Kit, [45RFE] 1999-Up	1	
	K44901B	Bushing Kit, [68RFE] 2007-Up	1	
036	44002	Bushing, [45RFE] (Stator) (Front) 1999-Up	1	
037	44003	Bushing, [45RFE / 68RFE] (Stator) (Rear) 1999-Up	1	
047	44022	Bushing, [45RFE / 68RFE] (Input Shaft) (Rear) 1999-Up	1	
050	44009	Bushing, [45RFE / 68RFE] (Input Clutch Hub) 1999-Up	1	
051	44024	Bushing, [45RFE] (Overdrive / Reverse Piston Housing) 1999-Up	1	
052	44013	Bushing, [45RFE / 68RFE] (Overdrive Hub) 1999-Up	2	
053	44014	Bushing, [45RFE] (Reaction Planet) 1999-Up	1	

053	44014B	Bushing, [68RFE] (Reaction Planet) 2007-Up	1	
054	44004	Bushing, [45RFE / 68RFE] (Reaction Planet Ring Gear) 1999-Up	2	
058	44016	Bushing, [45RFE / 68RFE] (Input Planet) 1999-Up	1	
061	44006	Bushing, [45RFE] (Low / Reverse Clutch Housing) 1999-Up	2	
061	44006B	Bushing, [68RFE] (Low / Reverse Clutch Housing) 2007-Up	2	
		METAL CLAD SEALS		
070	44151	Seal, [45RFE / 68RFE] (Front) 1999-Up	1	4617919
074	16695C	Seal, [45RFE] (Rear) (2WD) (With Boot) 1999-Up	1	4531216AB
074	34743C	Seal, [45RFE] (Rear) (2WD) (Without Boot) 1999-Up	1	3515383
074	44154	Seal, [45RFE / 68RFE] (4WD) (Adapter Housing) 1999-Up	1	4167929
074	44157B	Seal, [68RFE] (2WD) (With Boot) 1999-Up	1	5019020AB
072	44155	Seal, (Manual Lever) 1999-Up	1	4799346
		FRICTION CLUTCH		
100	44106	Friction, [45RFE] (Overdrive Clutch) (Hi-Energy) 1999-Up	4	4799114
100	44106A	Friction, [68RFE] (Overdrive Clutch) (.052”) (Internal Spline) 2007-Up	6	
100	44106B	Friction, [68RFE] (Overdrive Clutch) (.052”) (External Spline) 2007-Up	6	
101	44104	Friction, [45RFE / 68RFE] (4th Clutch) (Hi-Energy) 1999-Up	3	4799530
102	44105	Friction, [45RFE] (Underdrive Clutch) 1999-Up	4	4799106
102	44105A	Friction, [68RFE] (Underdrive Clutch) (.058”) (Internal Spline) 2007-Up	5	
102	44105B	Friction, [68RFE] (Underdrive Clutch) (.058”) (External Spline) 2007-Up	5	
104	44103	Friction, [45RFE / 68RFE] (2nd Clutch) (Hi-Energy) 1999-Up	2	4799244
110	44102	Friction, [45RFE / 68RFE] (Reverse Clutch) (Hi-Energy) 1999-Up	2	4799757
114	44101	Friction, [45RFE] (Low / Reverse Clutch) (Hi-Energy) 1999-Up	6	4799461AB
114	44101A	Friction, [68RFE] (Low / Reverse Clutch) (.062”) (Internal Spline) 2007-Up	7	
114	44101B	Friction, [68RFE] (Low / Reverse Clutch) (.062”) (External Spline) 2007-Up	7	
	K44100	Friction Module, [45RFE] (Hi-Energy) 1999-Up	1	
		STEEL CLUTCH		
120	44116	Steel, [45RFE] (Overdrive Clutch) (.086”) (12 Teeth) (5.400”OD) (Takes 3)	3	4799398AB
121	44114	Steel, [45RFE / 68RFE] (4th Clutch) (.100”) (20 Teeth) (4.235”ID)	3	4799529
122	44112	Steel, [45RFE] (Underdrive Clutch) (.067”) (12 Teeth Notched) (5.400”ID)	5	4799105AB
124	44113	Steel, [45RFE / 68RFE] (2nd Clutch) (.127”) (10 Teeth) (6.750”ID)	2	4799243
130	44112	Steel, [45RFE / 68RFE] (Reverse Clutch) (.067”) (12 Teeth Notched) (5.400”ID)	1	4799105AB
134	44111	Steel, [45RFE] (Low / Reverse Clutch) (.068”) (45 Teeth) (5.690”ID)	6	4799460
	K44110	Steel Module, [45RFE] 1999-Up	1	
		CLUTCH PRESSURE PLATES		
140	44176	Pressure Plate, [45RFE / 68RFE] (Overdrive Clutch) (.390”) (4 Teeth) (12-Slots)	1	4799116
141	44178	Pressure Plate, [45RFE / 68RFE] (4th Clutch) (.196”) (20 Teeth) (4.242”ID)	1	4799533
142	44175	Pressure Plate, [45RFE] (Underdrive Clutch) (12 Teeth) (.125”)	1	4799108AB
142	44175A	Pressure Plate, [45RFE] (Underdrive Clutch) (12 Teeth) (.145”)	1	4799109AB
142	44175B	Pressure Plate, [45RFE] (Underdrive Clutch) (12 Teeth) (.280”)	1	4799107AB
142	44175C	Pressure Plate, [68RFE] (Underdrive Clutch) (12 Teeth) (.342”) 2007-Up	1	
144	44179	Pressure Plate, [45RFE / 68RFE] (2nd Clutch) (10 Teeth) (6-15/16”ID) (Selective)	1	4799687AB
150	44177	Pressure Plate, [45RFE] (Reverse Clutch) (No Teeth) (.340” at Edge)	1	4799121
150	44177B	Pressure Plate, [68RFE] (Reverse Clutch) (No Teeth) (.265” at Edge) 2007-Up	1	
154	44180	Pressure Plate, [45RFE] (Low / Reverse Clutch) (45 Teeth) (.313”) (5.690”ID)	1	4799667

154	44180B	Pressure Plate, [68RFE] (Low / Reverse Clutch) (45 Teeth) (.310") 2007-Up	1	
		VALVE BODY KITS		
	K44908	Shift Kit, [45RFE / 68RFE] 1999-05 (*Upgraded HD Accumulator Cover Plate, Snap Ring & Accumulator Seals)	1	Transgo
		OIL SEALING RINGS		
	K44903	Ring Kit, [45RFE]	1	
	K44903B	Ring Kit, [68RFE] 2007-Up	1	
179	44300	Ring, [45RFE / 68RFE] (Stator Support) (Seal Plated) 1999-Up	5	4799056
177	44301T	Ring, [45RFE] (Input Shaft) 1999-Up	2	4799539
177	44301BT	Ring, [68RFE] (Input Shaft) 2007-Up	2	
352	92302	Ring, [45RFE] (4th Accumulator) (Low / Reverse) (Overdrive) (2nd Clutch) (Underdrive) (Teflon) 1999-Up	10	4446544
		WASHERS & BEARINGS		
	K44906	Bearing Kit, [45RFE] 1999-Up	1	
	K44906B	Bearing Kit, [68RFE] 2007-Up	1	
211	44450	Thrust Bearing, [45RFE / 68RFE] (Pump to Input Clutch Hub) (2.364"OD) (1.645"ID) (.150" Thick) (*Also Underdrive Hub) (Both), (Reaction Sun Gear) (Both), (Reaction Planet) (Rear), (Input Sun Gear) (Both Sides)	1-9	4799469
214	44450	Bearing, [45RFE / 68RFE] (Overdrive Hub to Reverse Hub)	1	
220	44450	Bearing W/Races, [45RFE / 68RFE] (Underdrive Hub to Overdrive Hub)	1	
226	44452	Bearing, [45RFE / 68RFE] (2-4 Drum to Ring Gear Hub) (2.663"OD) (1.945"ID) (.150"Thick) (*Also Input Planet) (Rear)	1-2	4799459
227	44400	Washer, [45RFE / 68RFE] (2-4 Drum to Ring Gear Hub) (3-Notches) (Selective) (3.020"OD) (2.152"ID)	1	
232	44450	Bearing W/Races, [45RFE / 68RFE] (Input Clutch Hub to Underdrive Hub)	1	
234	44451	Bearing, [45RFE / 68RFE] (Reverse Hub to Drum) (3.950"ID) (.240" Thick)	1	4799936AB
235	44450	Bearing W/Races, [45RFE / 68RFE] (Reaction Planet Ring Gear to Reaction Sun Gear)	1	
238	44450	Bearing W/Races, [45RFE] (Reaction Planet to Reverse Planet)	1	
238	44450B	Bearing W/Races, [68RFE] (Reaction Planet to Reverse Planet)	1	
241	44450	Bearing W/Races, [45RFE / 68RFE] (Reaction Sun Gear to Reaction Planet)	1	
244	44450	Bearing W/Races, [45RFE] (Reverse Planet to Input Sun Gear)	1	
244	44454B	Bearing W/Races, [68RFE] (Reverse Planet to Input Sun Gear) 2007-Up	1	
247	44450	Bearing W/Races, [45RFE] (Input Planet Sun Gear to Input Planet)	1	
247	44455B	Bearing W/Races, [68RFE] (Input Planet Sun Gear to Input Planet) 2007-Up	1	
251	44452	Bearing W/Races, [45RFE] (Input Planet) (Rear)	1	
251	44450B	Bearing W/Races, [68RFE] (Input Planet) (Rear) 2007-Up	1	
271	22976B	Bearing, [45RFE] (Extension Housing) (2.835"OD) (1.375"ID) (.668" Thick) (Cast # 6207A30)	1	2466224
271	44976B	Ball Bearing, [68RFE] (Extension Housing) (3.150"OD) (1.573"ID) (.705"Thick) 2007-Up	1	
285	44453	Shim, [45RFE / 68RFE] (Low / Sprag) (3.930"OD) (.040" Thick) (1-Inner Tab)	1	
		GASKETS & RUBBER COMPONENTS		
300	44500	Gasket, [45RFE/ 5-45RFE / 68RFE] (Bottom Pan) 1999-Up	1	
300	44500D	Gasket, [45RFE / 5-45RFE / 68RFE] (Bottom Pan) (Fiber) 1999-Up	1	
311	44516A	O-Ring, [45RFE / 5-45RFE] (Front Plate Cover) (Outer) 1999-Up	1	4799003
311	44516B	O-Ring, [45RFE / 5-45RFE] (Front Plate Cover) (Inner) 1999-Up	1	
342	44156	Seal, [45RFE] (Valve Body Clutch Feed) (*3 Per Transmission) 1999-Up	3	

347	44503	Seal, [45RFE / 68RFE] (Solenoid to Case)	1	
371	3292B	Seal, [45RFE / 68RFE] (Filler Tube) 1999-Up	1	
379	44550	Seal, [45RFE / 5-45RFE / 68RFE] (Filter Neck) **(*Must Sell This With 44710 & 44710A)**	1	04799964AB
381	44529A	O-Ring, [45RFE / 5-45RFE] (Converter Hub to Pump Body) 1999-Up	1	
		TECHNICAL MANUALS		
	TM45RFE	Technical Manual, [45RFE] (Chrysler RWD) 1999-Up	1	ATSG
	TM68RFE	Technical Manual, [68RFE] 2007-Up	1	ATSG
		ELECTRICAL COMPONENTS		
420	44836	Solenoid Assembly, [45RFE / 5-45RFE] (23-Prong Connector) 1999-03	1	4799934AC
420	44836A	Solenoid Assembly, [45RFE / 5-45RFE / 68RFE] (23-Prong Connector) 2004-Up	1	5170877AC
429	44955	Sensor, [45RFE / 68RFE] (Line Pressure / Governor Pressure Tranducer) (3-Prong) (Double O-Rings on Passenger Side Rear of Case) 1999-Up	1	4799758
	44958	Solenoid, [45RFE / 68RFE] (Line Pressure)	1	
436	44956	Speed Sensor, [45RFE / 68RFE] (Output Speed Sensor) 1999-Up	1	4799061
438	44956	Speed Sensor, [45RFE / 68RFE] (Input Speed Sensor) 1999-Up	1	4799061
		HARD PARTS		
500	44912	Complete Pump, [45RFE]	1	
500	44912B	Complete Pump, [68RFE] (Cast # 52119617AA) 2007-Up	1	
507	44912-01	Spring, [45RFE] (TCC Accumulator Valve) (5 Per Pack)	1	Sonnax
507	44912-02	Spring Set, [45RFE / 5-45RFE] (Torque Converter Limit Valve Spring) (5 Per Pack) 1999-Up	1	Sonnax
510	44916	Pump body, [45RFE] (With Gears) 1999-Up	1	4799565
510	44916B	Pump Body, [68RFE] (With Gears) (.590"Thick) (Cast # 52119617AA) 2007-Up	1	
519	44914	Cover, [45RFE] (Front Plate) (13-13/16" OD) (Seal Mounts in Pump) 1999-07	1	4799609
519	44914A	Cover, [45RFE / 5-45RFE] (Front Plate) (Seal Mounts in Cover) 2007-Up	1	
519	44914B	Cover, [68RFE] (Front Plate) (*Uses an Outer O-Ring Only) (Front Seal Presses into this Plate) 2007-Up	1	
520	44919	Stator Tube, [45RFE] (5-Ring) (7-5/8" Long) (Without Aluminum Stator Body #528)	1	4799580AB
520	44919B	Stator Tube, [68RFE] (8-3/8" Long) (Without Front Bushing) 2007-Up	1	
528	44915	Stator Body, [45RFE] (Aluminum) (Cast # 04799578)	1	4799576
528	44915B	Stator Body, [68RFE] (Aluminum) (Cast # 04799578) 2007-Up	1	
530	K44201	Pump Gear Set, [45RFE] (27 Teeth - 15 Teeth - 15 Teeth) (With 2-Lugs for Converter Hub)	1	
530	K44201B	Pump Gear Set, [68RFE] (With 4-Lugs for Converter Hub) 2007-Up	1	
540	44890	By-Pass, [45RFE / 68RFE] (Cooler Screws In Case)	1	
544	44202	Plate, [45RFE] (Seperator Pump)	1	
544	44202B	Plate, [68RFE] (Seperator Pump) 2007-Up	1	
554	44923	Drum, [45RFE / 68RFE] (Input) (Aluminum) (12-Notches) (7-3/16"OD)	1	4799648
557	44833	Drum, [45RFE] (Low / Reverse Clutch) (*Uses an Aluminum Piston) (6 Clutch) 1999-up	1	4799635
557	44833B	Drum, [68RFE] (Low / Reverse Clutch) (*Uses a Bonded Piston) (7 Clutch) 2007-Up	1	
558	44922	Drum, [45RFE] (2-4 Clutch) (3 Clutch) (Aluminum) (10-Outer Lugs) (Cast # 4799517)	1	4799498
558	44922B	Drum, [68RFE] (2-4 Clutch) (3 Clutch) (*Uses a Bonded Piston) 2007-Up	1	
570	44805	Overdrive Hub, [45RFE] (7-3/4" Long)	1	4799550
570	44805B	Overdrive Hub, [68RFE] (7-1/4" Long) 2007-Up	1	
571	44807	Underdrive Hub, [45RFE] (10-1/5" Long)	1	4799546
571	44807B	Underdrive Hub, [68RFE] (9-7/8" Long) 2007-Up	1	
574	44248	Input Clutch Hub, [45RFE] (60 Teeth) (Outer) (2.715"ID at Bushing) (Beveled Shoulder Under #960 Piston)	1	4799536AC

574	44248B	Input Clutch Hub, [45RFE / 68RFE] (60 Teeth) (Outer) (2.715"ID at Bushing) (Square Shoulder Under #960 Piston)	1	
576	44808	Reverse Hub, [45RFE] (2.145" Neck) (3 Teeth Clutch)	1	4799556
576	44808B	Reverse Hub, [68RFE] **(*Machined Steel)** 2007-Up	1	
582	44731	Planet, [45RFE] (Input) (5 Gear) (11" Long) (4x4) (2-3/4" From Surface Where Bearing # 251 Sets to Shoulder Where the Park Gear Sets) (*Uses .555" Thick Park Gear)	1	4799501
582	44731A	Planet, [45RFE] (Input) (5 Gear) (11" Long) (4x4) (2-5/8" From Surface Where Bearing # 251 Sets to Shoulder Where the Park Gear Sets) (*Uses .670" Thick Park Gear)	1	
582	44731B	Planet, [68RFE] (Input) (6 Gear) (10-1/4" Long) (4x4) 2007-Up	1	
583	K44747A	Planet Kit, [45RFE] (4x4) (42 Teeth Sun Gear)	1	
583	K44747B	Planet Kit, [68RFE] (6 Gear Planet) 2007-Up	1	
584	44735	Planet, [45RFE] (Reverse) (4 Gear) (12-Lugs) 1999-Up	1	4799503
584	44735B	Planet, [68RFE] (Reverse) (6 Gear) (20-Lugs) 2007-Up	1	
586	44747	Planet, [45RFE] (Reaction) (42 Teeth Sun Gear) (3 Gear) (40-Outer Clutch Splines) 1999-Up	1	4799619
586	44747B	Planet, [68RFE] (Reaction) (63 Teeth Sun Gear) (6 Gear) 2007-Up	1	
592	44732	Ring Gear, [45RFE] (Input) (3.400" Thick) (16-Lugs) (12-Notches) (Ring Gear) (Rear) 1999-Up	1	4799501
592	44732B	Ring Gear, [68RFE] (Input) (87 Teeth) (20-Lugs) 2007-Up	1	
596	44748	Hub/Ring Gear, [45RFE] (2nd Clutch to Reaction Planet) (84 Teeth) (5.914"OD) (24 Teeth Clutch) 1999-Up	1	4799604
596	44748B	Hub/Sun Gear, [68RFE] (2nd Clutch) (24 Teeth Hub) (63 Teeth Sun Gear) 2007-Up	1	
612	44733	Sun Gear, [45RFE] (Input) (42 Teeth Left Angle) (2.650"OD) (2.070" Long With Nose)	1	4799586
612	44733A	Sun Gear, [45RFE] (Input) (42 Teeth Left Angle) (2.650"OD) (2.015" Long With Nose)	1	
612	44733B	Sun Gear, [68RFE] (Input) (39 Teeth) (2.405"OD) (2.285" Long) 2007-Up	1	
616	44749	Sun Gear, [45RFE] (Reaction) (42 Teeth Left Angle) (2.650"OD) (1.215" Thick) 1999-Up	1	4799602
		SPRAGS & ONE WAY CLUTCHES		
644	44727	Sprag Assembly, [45RFE] (Low With Races) (14-Roller Plastic Cage) (16-Lugs on Outer Race)	1	4799465
644	K44727B	Sprag Assembly, [68RFE] (Low) (36-Element) (20-Lugs on Outer Race) 2007-Up	1	52119741AA
654	44727A	Sprag, [45RFE] (Low)	1	
654	44727B	Sprag, [68RFE] (Low) (36-Element) 2007-Up	1	
		HARD PARTS (Continued)		
670	44823	Input Shaft, [45RFE] (10-1/4" Long) (29-Splines)	1	4799537
670	44823B	Input Shaft, [68RFE] (11-3/4" Long) (27-Splines)	1	
690	44864	Park Gear, [45RFE] (30-Lugs) (6-5/16"OD) (.555" Thick)	1	4799493
690	44864A	Park Gear, [45RFE / 68RFE] (30-Lugs) (6-5/16"OD) (.670" Thick)	1	
		VALVE BODIES (REBUILT)		
740	CR-2760	Valve Body, [45RFE] (Black) (Solenoid Connector) 1999-04 (Without Solenoids)	1	
740	CR-2761	Valve Body, [45RFE / 5-45RFE] (White) (Solenoid Connector) 2004-Up (Without Solenoids)	1	
		VALVE BODIES		
740	44892	Valve Body, [45RFE] (Without Solenoids) (Cast # 04799655)	1	4799588
		VALVE BODY COMPONENTS		
741	44837	TRS Cam Plate, [45RFE / 68RFE] 2004-Up	1	
741	92835-18K	Plugs, [45RFE] (Switch Valve) (Oversized) (*For 92835-RM) (2-Oversized Plugs & 1-End Plug)	1	Sonnax
	92835-02K	Plugs, [45RFE / 545RFE] (Solenoid Switch Valve) **(*For Use With 92835-18K)** (2 each)	1	Sonnax
	92835-RM	Reamer, [45RFE] (*For Oversized Plugs)	1	Sonnax
741	92835-21	Valve, [5-45RFE] (Solenoid Switch) (Oversize) **(*Must Use F-92835-TL Reamer & VB-FIX)**	1	Sonnax
	F-92835-TL	Reamer, [5-45RFE] (*For 92835-21)	1	Sonnax
	44912-01	Springs, [45RFE / 5-45RFE] (TCC Accumulator) (Bag of 5ea)	1	Sonnax

	44912-02	Springs, [45RFE /5-45RFE] (Torque Converter Limit) (Bag of 5ea)	1	Sonnax
746	44713	Gasket, [45RFE / 5-45RFE] (Solenoid) (1999-03 / Dodge) & (1999-04 / Jeep)	1	
746	44713A	Gasket, [5-45RFE / 68RFE] (Solenoid) (2004-Up / Dodge) & (2005-Up / Jeep)	1	
		HARD PARTS (Continued)		
760	44806	Case, [45RFE] (7-3/4" Top Bolts) (15-Pan Bolts) (Double Starter) (Cast # 4799660)	1	4799613
760	44806B	Case, [68RFE] (Diesel) (6-1/4" Top Bolts) (Starter at 3:00) (Cast # 52119564) 2007-Up	1	
765	44801	Pan, [45RFE / 68RFE] (2WD)	1	68065921AA
765	44801A	Pan, [45RFE / 68RFE] (15-Bolts) (3-5/8" Deep In Corner) (4x4)	1	5013681AA
770	44205	Extension Housing, [45RFE] (4-1/2") (Aluminum) (6-Bolts to Transfer Case) (4-Bolt Mount) (Cast # 52107719)	1	52107719
770	44205A	Extension Housing, [45RFE] (5-3/4") (Aluminum) (6-Bolts to Transfer Case) (4-Bolt Mount) (Cast # 52098690)	1	
770	44205B	Extension Housing, [68RFE] (4-1/8" Long) (4x4) 2007-Up	1	
852	44810	Cushion, [45RFE / 68RFE] (2nd Clutch) (.068" Thick) (6-7/8"OD)	1	4799521
	K44928	Kit, Snap Ring, [45RFE] 1999-Up	1	
	K44928B	Kit, Snap Ring, [68RFE] 2007-Up	1	
926B	44703A	Spring, [45RFE] (Accumulator) (The Small Inner Spring) 1999-Up	4	4567575
950	44893A	Accumulator Side Cover Plate, [45RFE] (Cast # 04799655) **(*Included In K44908 Transgo Kit)**	1	4799598AB
950	44892-01K	Kit, Accumulator Side Cover Plate, [45RFE] (Includes:1-Plate, Shim, 6-Screws, 6-Washers) **(*Requires: 44892-TL Tap to Meet Torque Specs)** (Thicker & Stronger than OE Plate)	1	Sonnax
960	44830	Piston, [45RFE / 68RFE] (Underdrive Clutch) (Outer) (Bonded) (Balance Piston) (5-7/8"OD) (2-1/4"ID)	1	4799652
961	44911	Piston, [45RFE / 68RFE] (Overdrive / Reverse) (4-Notches) (7-7/8"OD) (Cast # 4799676)	1	4799645
962	44832	Piston, [45RFE] (2nd Clutch) (Aluminum) (1.190" Thick) (Cast # 4799519) (18-Notches) (7-15/16"OD)	1	
962	44832B	Piston, [68RFE] (2nd Clutch) (Bonded) (12-Notches) 2007-Up	1	
967	44854	Piston, [45RFE] (Low / Reverse Clutch) (Aluminum) (Cast # 4799639) (6-7/8"OD)	1	4799457
967	44854B	Piston, [68RFE] (Low / Reverse Clutch) (Bonded) 2007-Up	1	
968	44831	Piston, [45RFE] (4th Clutch) (Aluminum) (5-7/16"OD) (Cast # 4799524)	1	
968	44831B	Piston, [68RFE] (2-4 Clutch) (Bonded) 2007-Up	1	
970	44977	Return Spring, [45RFE / 68RFE] (Underdrive / Overdrive Clutch) (20-Springs Inside Retainer) (4-1/4"OD)	1	4799101
971	44802	Dished Spring, [45RFE] (Overdrive / Reverse Clutch) (8-Fingers) (5.588"OD) (.068" Thick)	1	4799087
971	44802B	Dished Spring, [68RFE] (Overdrive / Reverse Clutch) (14-Fingers) (5.888"OD) (.072" Thick) 2007-Up	1	
977	44753	Dished Spring, [45RFE] (Low / Reverse Clutch Return) (8-Fingers) (.088" Thick) (5.915"OD)	1	5179008AA
977	44753A	Dished Spring, [45RFE] (Low / Reverse Clutch Return) (8-Fingers) (.068" Thick) (5.580"OD)	1	
977	44753B	Dished Spring, [68RFE] (Low / Reverse Clutch Return) (8-Fingers) (6.1875"OD) 2007-Up	1	
978	44978	Springs & Retainer, [45RFE / 68RFE] (4th Clutch) (3-3/8"OD) (22-Springs)	1	4799527
980	44829	Piston, [45RFE / 5-45RFE / 68RFE] (Underdrive Clutch) (Inner) (Bonded) (6-1/8"OD) (2-3/4"ID) 1999-Up	1	4799650
991	44687	Detent, [45RFE] (Roller Spring Loaded) (1-Bolt)	1	
991	K44676	Linkage Assembly, [45RFE] (Internal) (5-Pieces)	1	
992	44675A	Lever, [45RFE] (External Linkage) (4" Long) (Snap-on Bell Type)	1	
992	44675B	Lever, [68RFE] (External Linkage) (3-5/8" x 1-1/4") (Snap-on Bell Type) 2007-Up	1	
996	44280	Cooler Fitting, [45RFE] (Screw In Type)	2	
996	44280B	Cooler Fitting, [68PFE] (Push in Type) 2007-Up	2	

42RLE (RWD)

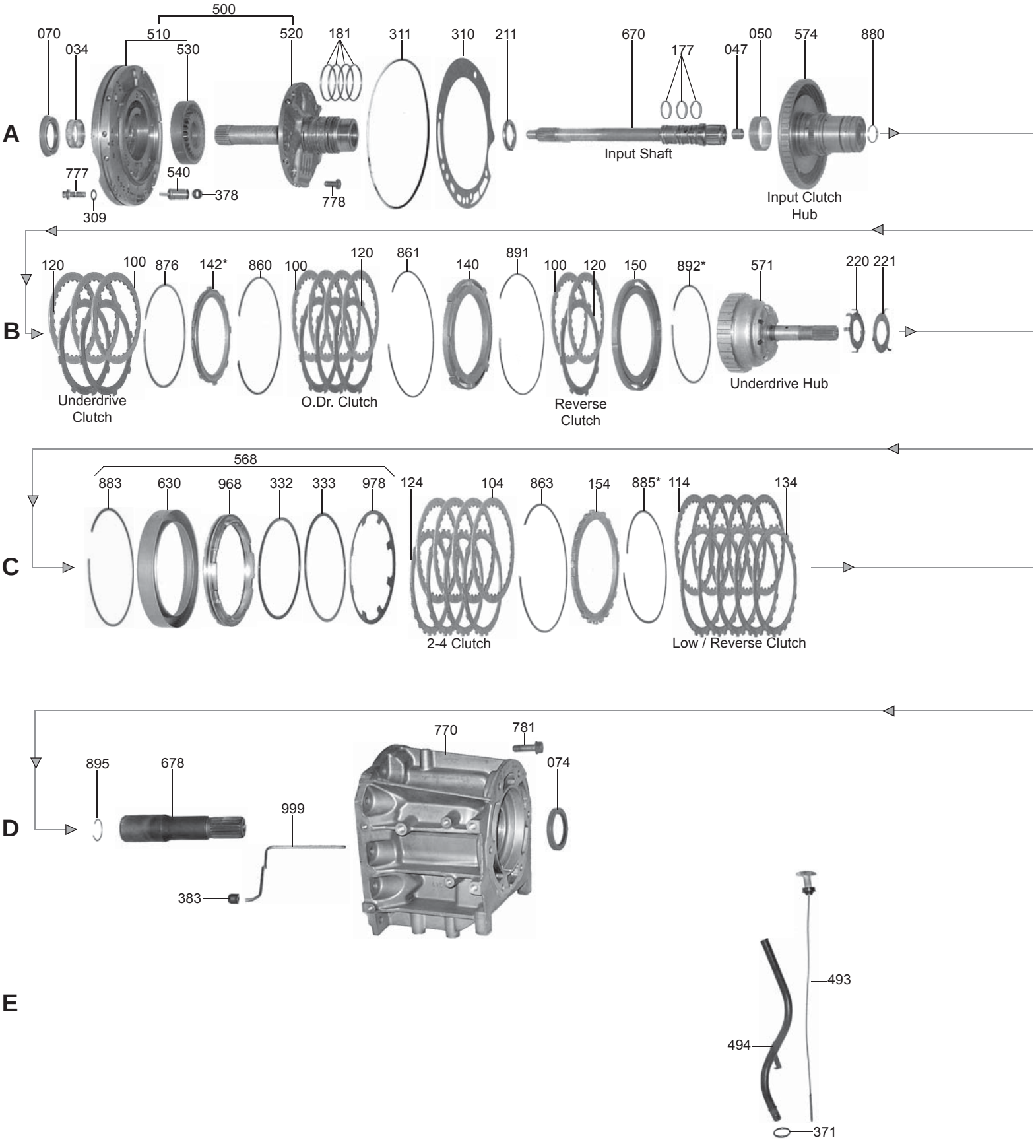
A
500
070
510
520
181
311
310
211
670
177
047
050
574
880
034
530
777
540
378
309
778
Input Shaft
Input Clutch Hub
B
120
100
876
142*
860
100
120
861
140
891
100
120
150
892*
571
220
221
Underdrive Clutch
O.Dr. Clutch
Reverse Clutch
Underdrive Hub
C
568
883
630
968
332
333
978
124
104
863
154
885*
114
134
2-4 Clutch
Low / Reverse Clutch
D
770
781
895
678
074
999
383
E
493
494
371

42RLE (RWD)

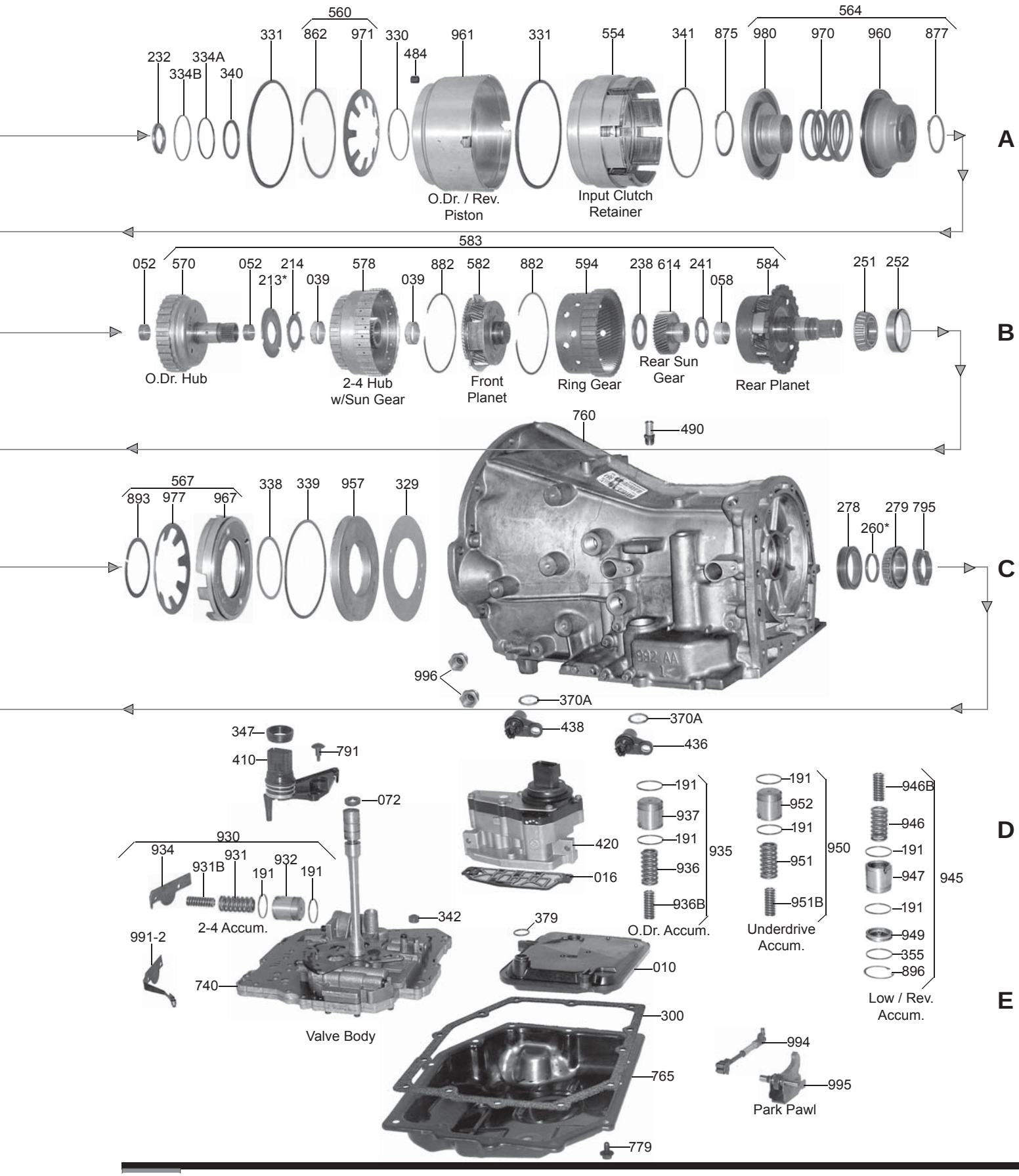
A
232
334B
334A
340
331
560
862
971
330
484
961
O.Dr. / Rev. Piston
331
554
Input Clutch Retainer
341
875
564
980
970
960
877
B
583
052
570
052
213*
214
039
578
039
882
582
882
594
238
614
241
058
584
251
252
O.Dr. Hub
2-4 Hub w/Sun Gear
Front Planet
Ring Gear
Rear Sun Gear
Rear Planet
C
760
490
567
893
977
967
338
339
957
329
278
260*
279
795
996
370A
438
370A
436
D
347
410
791
072
930
934
931B
931
191
932
191
2-4 Accum.
342
991-2
740
Valve Body
420
016
379
010
191
937
191
936
936B
935
O.Dr. Accum.
191
952
191
951
951B
950
Underdrive Accum.
946B
946
191
947
191
949
355
896
945
Low / Rev. Accum.
E
300
765
779
994
995
Park Pawl

42RLE (RWD)

ILL#	PART#	DESCRIPTION	QTY	REF #
		OVERHAUL KIT		
	K61900AP	Overhaul Kit, [42RLE] (With Pistons) 2003-Up	1	
	K61900A	Overhaul Kit, [42RLE] (Without Pistons) 2003-Up	1	
		MASTER L/STEELS KIT		
	DK6100AP-S	Master L/Steels Kit, [42RLE] (With Pistons) 2003-Up	1	
	DK6100A-S	Master L/Steels Kit, [42RLE] (Without Pistons) 2003-Up	1	
		MASTER W/STEELS KIT		
	DK6100AP	Master W/Steels Kit, [42RLE] (With Pistons) 2003-Up	1	
	DK6100A	Master W/Steels Kit, [42RLE] (Without Pistons) 2003-Up	1	
		FILTERS		
010	61711	Filter, [42RLE] (RWD) 2003-Up	1	52852913AB
016	61111A	Filter/Plate, [42RLE] (Solenoid Assembly to Valve Body) 2003-Up	1	3878313
		BUSHINGS		
	K61001A	Bushing Kit, [42RLE] 2003-Up	1	
034	12502	Bushing, [42RLE] (Pump Body) (Babbit) 2003-Up	1	2466796
034	12502A	Bushing, [42RLE] (Pump Body) (Bronze) 2003-Up	1	
039	92005A	Bushing, [42RLE] (Clutch Hub) 2003-Up	2	
047	92002A	Bushing, [42RLE] (Input Shaft) (Rear) (.605”OD) 2003-Up	1	
050	92003	Bushing, [42RLE] (Input Clutch Hub) (Front) 2003-Up	1	4377170
050	92003-01K	Bushing, [42RLE] (Input Clutch Hub) (Front) 2003-Up (*Has a Tighter Tolerances Than OE)	1	Sonnax
	92003TL	Bushing Tool, [42RLE] (*For 92003-01K)	1	Sonnax
052	92004A	Bushing, [42RLE] (Overdrive Clutch Hub) (.283” Tall) 2003-Up	2	4659617
052	92004L	Bushing, [42RLE] (Overdrive Clutch Hub) (1-Piece) (*Fits Hub With .937”ID) 2003-Up	1	Sonnax
052	92004LOS	Bushing, [42RLE] (Overdrive Clutch Hub) (1-Piece) (*Fits Hub With .941”ID) 2003-Up	1	Sonnax
058	92006	Bushing, [42RLE] (Rear Planet) 2003-Up	1	4412230
		METAL CLAD SEALS		
070	12575	Seal, [42RLE] (Front) (With Flange) 2003-Up	1	4269057
072	92574	Seal, [42RLE] (Linkage / Valve Body Stem Seal) (Rubber) 2003-Up	1	4412836
074	16695C	Seal, [42RLE] (Extension Housing) (2WD) 2003-Up	1	4531216AB
074	12925T	Seal, [42RLE] (Extension Housing) (4x4) (2.568”OD) 2003-Up	1	4269956AB
		FRICTION CLUTCH		
100	92138	Friction, [42RLE] (Overdrive/Underdrive & Reverse Clutch) (.071”) (2nd Design) (Hi-Energy)	2-10	4531678
104	92147	Friction, [42RLE] (2-4 Clutch) (.086”) (Hi-Energy) 2003-Up	4	4377125
114	92134	Friction, [42RLE] (Low / Reverse Clutch) (.072”) (Hi-Energy) 2003-Up	5	4567573
		STEEL CLUTCH		
120	92183	Steel, [42RLE] (Overdrive / Underdrive & Reverse Clutch) (.068”) 2003-Up	3-8	4659053
124	92135	Steel, [42RLE] (2-4 Clutch) (.101”) 2003-Up	4	4659054
134	92162	Steel, [42RLE] (Low / Reverse Clutch) (.067”) 2003-Up	5	4659055
		PRESSURE PLATES		
140	92191B	Pressure Plate, [42RLE] (Overdrive Clutch) (.342”) (4 Teeth) (4.530”ID) 2003-Up	1	
140	92191A	Pressure Plate, [42RLE] (Overdrive Clutch) (.356”) (4-Lugs) 2003-Up	1	4531556
142	K61187	Pressure Plate, [42RLE] (Underdrive Clutch) (.228”) 2003-Up	1	4723683
142	K61187A	Pressure Plate, [42RLE] (Underdrive Clutch) (.248”) 2003-Up	1	

142	K61187B	Pressure Plate, [42RLE] (Underdrive Clutch) (.268") 2003-Up	1	4723682
150	92194	Pressure Plate, [42RLE] (Reverse Clutch) (.340") 2003-Up	1	4531905
150	92194B	Pressure Plate, [42RLE] (Reverse Clutch) (.186") 2003-Up	1	4531925
154	61188B	Pressure Plate, [42RLE] (Low / Reverse Clutch) (.250") 2003-Up	1	4897454AA
		VALVE BODY KITS		
	K92908	Shift Kit, [42RLE] 2003-Up	1	Transgo
		SEALING RINGS		
	K92903	Ring Kit, [42RLE] 2003-Up	1	
177	92301	Ring, [42RLE] (Input Shaft) (1.443"OD) (Teflon) 2003-Up	3	4446543
181	12600A	Ring, [42RLE] (Stator) (2.062"OD) (Metal) 2003-Up	4	
191	92302	Ring, [42RLE] (Accumulator Non-Rotating) (1.013"OD) (Graphite) 2003-Up	2-8	4446544
		WASHERS & BEARINGS		
211	92633	Bearing, [42RLE] (Stator to Input Drum) (1.713"ID) 2003-Up	1	4412209
213	92622	Race, [42RLE] (Overdrive Hub to 2-4 Hub) (.039") (3-Slot) 2003-Up	1	4431662
213	92622H	Race, [42RLE] (Overdrive Hub to 2-4 Hub) (.048") (3-Slot) 2003-Up	1	4431663
213	92622A	Race, [42RLE] (Overdrive Hub to 2-4 Hub) (.057") (3-Slot) 2003-Up	1	4431664
213	92622J	Race, [42RLE] (Overdrive Hub to 2-4 Hub) (.066") (3-Slot) 2003-Up	1	4431665
213	92622B	Race, [42RLE] (Overdrive Hub to 2-4 Hub) (.074") (3-Slot) 2003-Up	1	4431666
213	92622K	Race, [42RLE] (Overdrive Hub to 2-4 Hub) (.083") (3-Slot) 2003-Up	1	4431667
213	92622C	Race, [42RLE] (Overdrive Hub to 2-4 Hub) (.091") (3-Slot) 2003-Up	1	4431668
213	92622D	Race, [42RLE] (Overdrive Hub to 2-4 Hub) (.100") (3-Slot) 2003-Up	1	4431669
213	92622L	Race, [42RLE] (Overdrive Hub to 2-4 Hub) (.109") (3-Slot) 2003-Up	1	4431670
213	92622E	Race, [42RLE] (Overdrive Hub to 2-4 Hub) (.117") (3-Slot) 2003-Up	1	4431671
213	92622M	Race, [42RLE] (Overdrive Hub to 2-4 Hub) (.126") (3-Slot) 2003-Up	1	4431672
214	92627	Washer, [42RLE] (Overdrive Hub to 2-4 Hub) (4-Tab) (.050" Thick) (1.335"ID) 2003-Up	1	4412216
220	92625	Washer, [42RLE] (Underdrive Hub to Overdrive Hub) (5-Tab) (.050" Thick) (1.335"ID) 03-Up	1	4659883
221	92621	Race, [42RLE] (Underdrive Hub to Overdrive Hub) (3-Tab) (.031" Thick) (1.180"ID) 2003-Up	1	
238	92633	Bearing, [42RL] (Front Planet to Rear Sun Gear) (.139" Thick) (2.292"OD) 2003-Up	1	
241	92635	Bearing, [42RLE] (Rear Sun Gear to Rear Planet) (1.790 OD) 2003-Up	1	
251	92964	Cone Bearing, [42RLE] (Presses on Rear Planet) 2003-Up	1	LM300848
252	92769	Cup Race, [42RLE] (Rear Planet to Case) 2003-Up	1	LM300811
260	61640	Shim, [42RLE] (Output Shaft to Rear Bearing) (Selective) (5.17 - 5.19mm to 6.04 - 6.06mm)	1	5280020
278	32978	Cup Race, [42RLE] (Case to Output Shaft) 2003-Up	1	JL69310
279	32977	Bearing, [42RLE] (Case to Output Shaft) (22-Rollers) (1.497"ID) 2003-Up	1	JL69349
279	K32978	Bearing/Race Kit, [42RLE] (Case to Output Shaft) (#278 & #279) (22-Rollers) 2003-Up	1	SET11
		GASKETS & RUBBER COMPONENTS		
300	61501	Gasket, [42RLE] (Bottom Pan) 2003-Up	1	
300	61501F	Gasket, [42RLE] (Bottom Pan) (Fiber) 2003-Up (Farpack)	1	
309	32172	Gasket/Washer, [42RLE] (Pump Bolt) 2003-Up	5	
310	92544	Gasket, [42RLE] (Pump) 2003-Up	1	4412844
311	32102	O-Ring, [42RLE] (Pump) 2003-Up	1	4659945
329	92106	Gasket, [42RLE] (Low / Reverse Piston Retainer) 2003-Up	1	4431649
330	92158	O-Ring, [42RLE] (Overdrive & Reverse Clutch) (Inner) 2003-Up	1-2	6033158
331	92143	Lip Seal, [42RLE] (Overdrive & Reverse Clutch) (Outer) 2003-Up	1-2	4412875
332	92142	D-Ring, [42RLE] (2-4 Clutch) (Inner) 2003-Up	1	4659376
333	92141	D-Ring, [42RLE] (2-4 Clutch) (Outer) 2003-Up	1	4659374
334A	92169	O-Ring, [42RLE] (Input Clutch Rear) (.103") (Red) (Inner) 2003-Up	1	6502269

42RLE (RWD)

334B	92171	O-Ring, [42RLE] (Input Clutch Front) (.103") (Blue) (Inner) 2003-Up	1	6502271
338	92145	D-Ring, [42RLE] (Low / Reverse Clutch) (Inner) 2003-Up	1	4659856
339	92140	D-Ring, [42RLE] (Low / Reverse Clutch) (Outer) 2003-Up	1	4659855
341	92110	Lip Seal, [42RLE] (Underdrive Clutch) (Outer) 2003-Up	1	4531408
347	92521A	Grommet, [42RLE] (PRNDL Switch to Case) (1.420"OD Case Connector Hole) (Rubber) 2003-Up	1	
371	3291	O-Ring, [42RLE] (Filler Tube) (.990"OD) 2003-Up	1	6030608
379	92167	O-Ring, [42RLE] (Filter) 2003-Up	1	6032780
		TECHNICAL MANUALS		
	TM42RLE	Technical Manual, [42RLE] (4 Speed RWD) 2003-Up	1	ATSG
		ELECTRICAL COMPONENTS		
410	61928A	Switch, [42RLE] (Neutral Safety & PRNDL) (Internal) (Flat Blades) 2003-Up	1	4659676AB
420	61936A	Solenoid Pack, [42RLE] (Shift) (4-Bolts to Valve Body) 2003-Up	1	4800171AA
	92955	Sensor, [42RLE] (Line Pressure Tranducer) 2005-Up	1	5078336AA
	92958	Solenoid, [42RLE] (Variable Line Pressure Control) 2005-Up	1	5078335AB
436	92887A	Speed Sensor, [42RLE] (Output) (3-1/2" Long) (2-Blade Connector) (*Has Extended Tip) 2003-Up	1	52854001AA
438	44956	Speed Sensor, [42RLE] (Input Speed Sensor) 2003-Up	1	4799061AB
484	92713	Screened Orifice, [42RLE] (In Overdrive / Reverse Piston) 2003-Up	1	4531903
		MISCELLANEOUS COMPONENTS		
490	61843A	Vent, [42RLE] (Case) 2003-Up	1	
		HARD PARTS		
500	61912B	Pump, [42RLE] (4-Ring Stator) 2003-Up	1	4567869AB
510	61916B	Pump Body W/Gears, [42RLE] (Dual Cycloidal) (.495" Thick Gears) 2003-Up	1	4741659
520	61913B	Stator, [42RLE] (Pump Cover) 2003-Up	1	
		PUMP COMPONENTS		
530	K92201A	Pump Gear Set, [42RLE] (12 Teeth Inner Gear) (.495" Thick) 2003-Up	1	
540	92890	By-Pass Valve, [42RLE] (In Case Under Pump) 2003-Up	1	4539880
		HARD PARTS (Continued)		
554	92923A	Drum, [42RLE] (Input Clutch Retainer) 2003-Up	1	4659935
570	92807B	Hub, [42RLE] (Overdrive & Reverse) (Round Bottom Grooves Where Square Tooth Friction Ride) (*Can Use 92807A)	1	
570	92807A	Hub, [42RLE] (Overdrive & Reverse) (1.160"OD Shaft) 2003-Up	1	4559993
571	92806	Hub, [42RLE] (Underdrive Clutch With Solid Shaft) 2003-Up	1	4431615
574	92248A	Hub, [42RLE] (Input Clutch) (*For 4-Ring Stator) 2003-Up	1	
578	92922B	Hub & Sun Gear, [42RLE] (2nd-4th Clutch) (1.160"ID Bushing) (*Has Round Bottom Grooves Where Square Teeth Frictions Ride) (*Can Use 92922A)	1	
578	92922A	Hub & Sun Gear, [42RLE] (2nd-4th Clutch) (1.160"ID Bushing) 2003-Up	1	4659618AB
582	92747A	Planet, [42RLE] (Front) (With Heat Treated Splines) 2003-Up	1	4567539AB
583	K61749B	Planet Kit, [42RLE] (Some) (.360" Thick Park Gear) (#570, 578, 582, 594, 614, 584) 2003-Up	1	
584	61730B	Planet, [42RLE] (Rear) (With Outout Shaft) (5 Gear) (.360" Thick Park Gear) 2003-Up	1	
584	61730A	Planet, [42RLE] (With Output Shaft) (5 Gear) (.230" Thick Park Gear) 2003-Up	1	4659111
594	92748	Ring Gear, [42RLE] (Rear Planet) 2003-Up	1	4799794
614	92750	Sun Gear, [42RLE] (Rear Planet) 2003-Up	1	4377080
630	61836A	Retainer, [42RLE] (2nd-4th Clutch Piston) (.955" Thick) (6-1/2"OD) 2003-Up	1	5102880AA
670	61828	Input Shaft, [42RLE] (10-7/8" Long) 2003-Up	1	4626452

678	61858A	Shaft, [42RLE] (Output) (2WD) 2003-Up	1	
678	61858B	Shaft, [42RLE] (Output) (4x4) (7-1/8" Long) (With Threaded Hole in the Rear of Shaft) 2003-Up	1	52852915AA
		VALVE BODIES		
740	61750D	Valve Body, [42RLE] (Less Solenoid Pack) (With PRNDL Switch) (Cast # 4659403) (PRNDL Switch is Black Switch on Valve Body) (*Has a Coil Spring Under Case Connector) 2003-Up	1	52854169AA
		VALVE BODY COMPONENTS		
741	92835-21	Valve, [42RLE] (Solenoid Switch) (Oversize) **(*Must Use F-92835-TL Reamer)**	1	Sonnax
	F-92835-TL	Reamer (*For 92835-21)	1	Sonnax
741	92835-02K	Plugs, [42RLE] (Switch Valve) (Oversize) **(*No Machining)** (2 Per Pkg)	1	Sonnax
741	92835-03K	Valve Kit, [42RLE] (Converter Regulator) (Includes: 1-Switch Valve & 1-Bias Valve)	1	Sonnax
741	92835-07	Sleeve, [42RLE] (Pressure Regulator Reducing)	1	Sonnax
741	92835-18K	Plugs, [42RLE] (Switch Valve) (Oversized) (Includes: 2-Plugs, 1-End Plug, & 1-O-Ring) **(*Requires: 92835-RM)**	1	Sonnax
		HARD PARTS (Continued)		
760	61170B	Case, [42RLE] (Double Starter) (17-1/8" Long) 2003-Up	1	5101881AA
765	61840A	Pan, [42RLE] (Bottom) (13-Bolts) 2003-Up	1	52852912AB
770	61704	Extension Housing, [42RLE] (4x4) (7-5/8" Long) (Cast # 52854195 AB) 2003-Up	1	52852986AB
795	61862	Nut, [42RLE] (Output Shaft) 2003-Up	1	6502476
839	34996	Magnet, [42RLE] (Pan) (Rectangular) 2003-Up	1	
860	92600D	Snap Ring, [42RLE] (Holds Underdrive Pressure Plate In) (.090" Thick) (6-5/16"OD) 2003-Up	1	4659934
861	92605A	Snap Ring, [42RLE] (Overdrive Pressure Plate) (Bottom) (.061") (6-7/8"OD Thick) (Wavy) 2003-Up	1	4505621
862	92603	Snap Ring, [42RLE] (Holds Spring to Piston) (.060" Thick) (5.325"OD) 2003-Up	1	4412203
863	92601B	Snap Ring, [42RLE] (Holds Low / Reverse Clutch Pressure Plate in Case) (.076" Thick) 03-Up	1	4799858AA
875	92608	Snap Ring, [42RLE] (Holds Input Clutch Retainer In) (.095" Thick) (2.595"OD) (With 2-Eyelets) 2003-Up	1	6507226AA
876	92600E	Snap Ring, [42RLE] (Under the Underdrive Pressure Plate) (.076" Thick) (5.955"OD) 03-Up	1	4659980
877	92609	Snap Ring, [42RLE] (Holds Underdrive Retainer In) (.077" Thick) (2.286"OD) (With 2-Eyelets) 2003-Up	1	6501715
880	92607	Snap Ring, [42RLE] (Holds Input Shaft to Hub) (.061" Thick) (1.030"OD) (*Wire Type) 03-Up	1	6501702
882	92602A	Snap Ring, [42RLE] (Front Planet to Rear Ring Gear) (.061" Thick) (4.720"OD) 2003-Up	2	6035238
883	92604	Snap Ring, [42RLE] (Holds 2-4 Clutch Retainer In) (.065" Thick) (7"OD) 2003-Up	1	4505591
885	92601	Snap Ring, [42RLE] (Under Low / Reverse Clutch Pressure Plate) (.039" Thick) (Wavy) 03-Up	1	4412395
891	92605	Snap Ring, [42RLE] (Overdrive Pressure Plate) (Top) (.069" Thick) 2003-Up	1	4505622
892	92606	Snap Ring, [42RLE] (Holds Reverse Pressure Plate In) (.061" Thick) 2003-Up	1	4377195
892	92606A	Snap Ring, [42RLE] (Holds Reverse Pressure Plate In) (.071" Thick) 2003-Up	1	4412871
892	92606B	Snap Ring, [42RLE] (Holds Reverse Pressure Plate In) (.081" Thick) 2003-Up	1	4412872
892	92606C	Snap Ring, [42RLE] (Holds Reverse Pressure Plate In) (.090" Thick) 2003-Up	1	4412873
893	92610	Snap Ring, [42RLE] (Holds Low / Reverse Piston In) (.062" Thick) (3.485"OD) 2003-Up	1	6501853
895	61610	C-Clip, [42RLE] (Output Shaft Retainer) (.135" Thick) (1.095"OD) 2003-Up	1	52852916AA
930	K92870A	Accumulator Assembly, [42RLE] (2-4 Accumulator) 2003-Up	1	
932	92870A	Piston, [42RLE] (2-4 Accumulator) 2003-Up	1	
931	92951	Spring, [42RLE] (2-4 Accumulator) (Outer) 2003-Up	1	
931B	92951B	Spring, [42RLE] (2-4 Accumulator) (Inner) 2003-Up	1	
935	K92870A	Accumulator Assembly, [42RLE] (Overdrive) 2003-Up	1	
936	92951	Spring, [42RLE] (Overdrive Accumulator) (Outer) 2003-Up	1	
936B	92951B	Spring, [42RLE] (Overdrive Accumulator) (Inner) 2003-Up	1	
937	92870A	Piston, [42RLE] (Overdrive) (Aluminum) 2003-Up (*Takes 2-Teflon Rings)	1	4446620AC

42RLE (RWD)

937	92834-05K	Sleeve Kit, [42RLE] (Overdrive) (2-4) (Low / Reverse) (Underdrive Accumulator) 1989-03 (*Restores Overdrive Shifts)	1	Sonnax
937	92870B	Piston, [42RLE] (Overdrive) (2-4) (Low / Reverse & Underdrive Accumulator) (Bonded) 04-Up	1-4	
937	92834-03K	Sleeve Kit, [42RLE] (Overdrive) (2-4) (Low / Reverse & Underdrive Accumulator) 1989-03 (*Gives Shorter Than OE Shifts)	1	Sonnax
945	K92870A	Accumulator Assembly, [42RLE] (Low / Reverse) 2003-Up	1	
946	92951	Spring, [42RLE] (Low / Reverse Accumulator) (Outer) 2003-Up	1	
946B	92951B	Spring, [42RLE] (Low / Reverse Accumulator) (Inner) 2003-Up	1	
947	92870A	Piston, [42RLE] (Low / Reverse Accumulator) (Aluminum) 2003-Up	1	
949	92885A	Retainer, [42RLE] (Low / Reverse Accumulator) (Aluminum) 2003-Up	1	4431617AB
949	92855B	Retainer, [42RLE] (Low / Reverse Accumulator) (Bonded) 2004-Up	1	
950	K92870A	Accumulator Assembly, [42RLE] (Underdrive) (With 2-Springs) 2003-Up	1	
951	92951	Spring, [42RLE] (Underdrive) (Outer) 2003-Up	1	4471880
951B	92951B	Spring, [42RLE] (Underdrive) (Inner) 2003-Up	1	
952	92870A	Piston, [42RLE] (Underdrive Accumulator) 2003-Up	1	
957	92755	Retainer, [42RLE] (Low / Reverse Clutch Piston) (Tin) 2003	1	4431648
957	92755A	Retainer, [42RLE] (Low / Reverse Clutch Piston) (Tin) 2004-Up (With Bleeder)	1	4800255AA
960	92912	Piston, [42RLE] (Underdrive Clutch) (With Molded Rubber) 2003-Up	1	4431612
961	61832B	Piston, [42RLE] (Overdrive / Reverse Clutch) (8-Lug Overdrive Pressure Plate) 2003-Up	1	5013476AA
967	92754	Piston, [42RLE] (Low / Reverse Clutch) (Aluminum) (1.150” Thick) 2003	1	
967	92754B	Piston, [42RLE] (Low / Reverse Clutch) (Bonded) 2004-Up	1	
968	61837A	Piston, [42RLE] (2-4 Clutch) (.668” Thick) (Aluminum) 2003-Up	1	4883078
968	61837B	Piston, [42RLE] (2-4 Clutch) (Bonded) (.665” Thick) 2004-Up	1	5102880AA
970	92977	Spring, [42RLE] (Underdrive Clutch Return) (3.002”OD) (2.250” Tall) 2003-Up	1	4377177
971	61831	Spring, [42RLE] (Overdrive / Reverse Clutch Return) (.063” Thick) (4.992”OD) (8-Fingers) 2003-Up	1-2	4412202
977	61841	Spring, [42RLE] (Low / Reverse Clutch Return) (.072” Thick) (5.390”OD) (8-Fingers) 2003-Up	1	4412261
978	61839	Spring, [42RLE] (2-4 Clutch Return) (.063” Thick) (6-1/2”OD) (8-Fingers) 2003-Up	1	4412248
980	92910	Housing, [42RLE] (Underdrive Piston) 2003-Up	1	4431610
994	61677A	Park Rod Actuator, [42RLE] (.513” Wide Roller) 2003-Up	1	52852956AA
995	K61678A	Park Pawl Assembly, [42RLE] (With .380”OD Pin) 2003-Up	1	
996	61280A	Fitting, [42RLE] (Cooler Line) (Screw-In Type) (24mm Hex Head) 2003-Up	2	
999	61679A	Oil Tube, [42RLE] (Case to Extension Housing) 2003-Up (Jeep)	1	52854177AA

NOTES

A404/A413/A470/A670

FWD 3 Speed

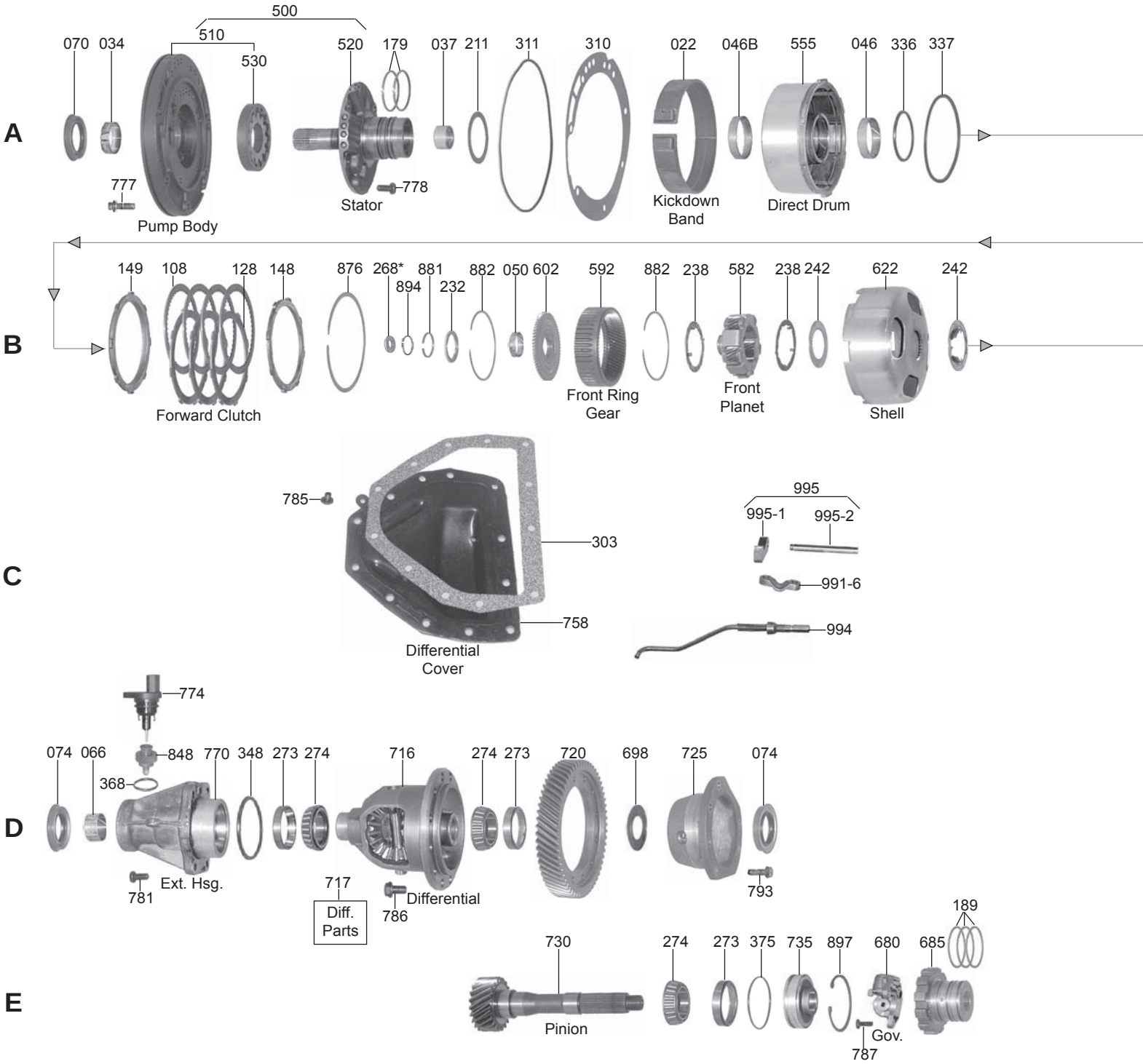

FWD 3 Speed

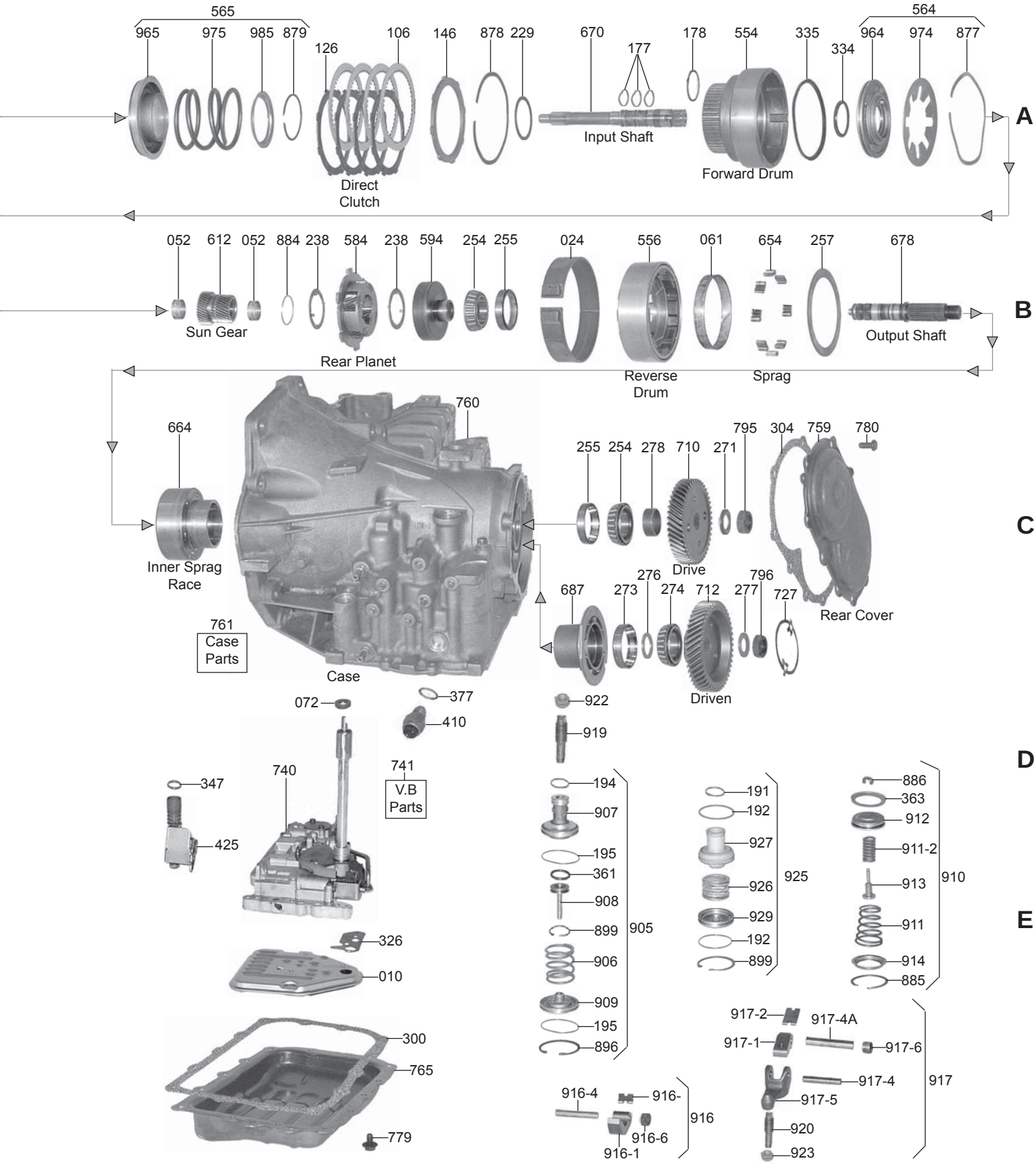
565
965
975
985
879
126
106
146
878
229
670
177
178
554
335
334
564
964
974
877
A
Input Shaft
Forward Drum
Direct Clutch
052
612
052
884
238
584
238
594
254
255
024
556
061
654
257
678
B
Sun Gear
Rear Planet
Reverse Drum
Sprag
Output Shaft
664
760
255
254
278
710
271
795
304
759
780
C
Inner Sprag Race
Drive
Rear Cover
687
273
276
274
712
277
796
727
761
Case Parts
Case
Driven
072
377
410
922
919
D
347
740
741
V.B Parts
425
194
907
195
361
908
899
906
905
909
195
896
191
192
927
926
929
192
899
925
886
363
912
911-2
913
911
914
885
910
E
326
010
300
765
779
916-4
916-
916-6
916-1
916
917-2
917-4A
917-1
917-6
917-4
917-5
920
923
917

A404/A413/A470/A670

ILL#	PART#	DESCRIPTION	QTY	REF #
		OVERHAUL KITS		
	K32900	Overhaul Kit, [A404] 1978-80	1	
	K32900A	Overhaul Kit, [A413 / A470 / A670] 1981-Up	1	
	K32900C	Overhaul Kit, [A404 / A413 / A470 / A670] (Combo) 1978-Up	1	
		MASTER L/STEELS KIT		
	DK3200-S	Master L/Steels, [A404] 1978-80	1	
	DK3200A-S	Master L/Steels, [A413 / A470 / A670] 1981-Up	1	
		MASTER W/STEELS KIT		
	DK3200	Master W/Steels, [A404] 1978-80	1	
	DK3200A	Master W/Steels, [A413 / A470 / A670] 1981-Up	1	
		FILTERS		
010	32776	Filter, [A404 / A413] (Felt) 1978-82	1	5212145
010	32776A	Filter, [A404 / A413 / A470 / A670] (1/2 Plastic & 1/2 Metal) 1983-Up	1	4269649
		FILTER KITS		
	FK32776	Filter Kit, [A404 / A413] (Felt) 1978-82	1	
	FK32776A	Filter Kit, [A413 / A470 / A670] (Plastic) 1983-Up	1	
		MISCELLANEOUS FILTERS		
	32778	Screen, [A404 / A413 / A470 / A670] (Bolts Under Governor) (Thimble Type) (Flat 3-Bolt)	1	5205839
	32713	Screen, [A404 / A413 / A470 / A670] (Bolts Under Governor) (Bronze Screen) (Flat 3-Bolt)	1	
	32777	Filter, [A413 / A470 / A670] (Regulator Screen) (Inside Valve Body)	1	3878313
		BANDS		
022	32700	Band, [A404 / A413 / A470 / A670] (Kickdown) (Semi-Flex) 1978-95	1	5212312
022	32700K	Band, [A413 / A470 / A670] (Kickdown) (Hi-Energy) 1996-Up	1	
022	32700A	Band, [A404 / A413 / A470 / A670] (Kickdown) (Rigid) 1982-Up	1	
024	32710	Band, [A404 / A413 / A470 / A670] (Reverse) 1978-Up	1	5205765
		BUSHINGS		
	K32001	Bushing Kit, [A404 / A413 / A470 / A670] 1978-Up	1	
034	12502	Bushing, [A404 / A413 / A470 / A670] (Pump Body) (Babbit) 1978-Up	1	
034	12502A	Bushing, [A404 / A413 / A470 / A670] (Pump Body) (Bronze) 1978-Up	1	
037	12503C	Bushing, [A404 / A413 / A470] (Stator) 1978-85	1	4058635
037	32007	Bushing, [A413 / A470 / A670] (Stator) 1986-Up	1	
046	32014	Bushing, [A404 / A413 / A470 / A670] (Direct Drum) (Rear) 1978-Up	1	5222406
046B	32010	Bushing, [A404 / A413 / A470 / A670] (Direct Drum) (Front) (Large) 1978-Up	1	5222405
050	32030	Bushing, [A404 / A413 / A470 / A670] (Front Ring Gear Hub) 1978-Up	1	5205728
052	32033	Bushing, [A404 / A413 / A470 / A670] (Sun Gear) 1978-Up	2	5205735
061	32040	Bushing, [A404 / A413 / A470 / A670] (Rear Band Drum) 1978-Up	1	5222137
066	32060	Bushing, [A404 / A413 / A470 / A670] (Extension Housing) 1978-Up	1	5212223
		METAL CLAD SEALS		
070	A12575	Seal, [A404 / A413 / A470 / A670] (Front) (Without Flange) 1978-Up	1	4269057
070	12575	Seal, [A404 / A413 / A470 / A670] (Front) (With Flange) 1978-Up	1	
072	22574	Seal, [A404 / A413 / A470 / A670] (Manual Shaft) (1/4" Thick) 1978-Up	1	3878447
074	32366	Seal, [A404 / A413 / A470 / A670] (Both Axles) 1978-Up	2	5205591

074	32367	Seal, [A404 / A413 / A470 / A670] (Both Axles) (*With “Floating Lip”) 1978-Up	2	
074	32366A	Seal, [A413 / A470 / A670] (Axle) (AWD) (*Goes In Transfer Case Adapter)	1	4486042
	32365	Seal, [A404 / A413] (Pinion Shaft) 1978-81	1	5222015
	32125S	Seal, [A404 / A413 / A470 / A670] (*For 32125LRB Axle Stabilizer)	1	Teckpak
		FRICTION CLUTCH		
106	32761	Friction, [A404 / A413 / A470 / A670] (Direct Clutch) (.083”) (Waffle) 1978-Up	2-4	5205675
108	32760	Friction, [A404] (Forward Clutch) (.071) (47 Teeth) 1978-80	2	5222185
108	32762	Friction, [A413 / A470 / A670] (Forward Clutch) (.071”) (49 Teeth) 1981-Up	2-4	5224084
	K32100	Friction Module, [A404] 1978-80	1	
	K32100A	Friction Module, [A413 / A470 / A670] 1981-Up	1	
		STEEL CLUTCH		
126	32751	Steel, [A404] (Direct Clutch) (.065”) (4-1/8”ID) 1978-80	4	5205677
126	32752	Steel, [A413 / A470 / A670] (Direct Clutch) (.101”) (4-1/8”ID) 1981-Up	3-4	4207208
128	32751	Steel, [A404] (Forward Clutch) (.065) (4-1/8”ID) 1978-80	2-3	
128	32753	Steel, [A413 / A470 / A670] (Forward Clutch) (.068”) (4-1/4”ID) 1981-Up	2-3	5224073
	K32110	Steel Module, [A404] 1978-80	1	
	K32110A	Steel Module, [A413 / A470 / A670] 1981-Up	1	
		CLUTCH PRESSURE PLATES		
146	32564	Pressure Plate, [A404] (Direct Clutch) (.265”) 1978-80	1	5205684
146	32556A	Pressure Plate, [A413 / A470 / A670] (Direct Clutch) (.185”) 1987-Up	1	
146	32566	Pressure Plate, [A413 / A470 / A670] (Direct Clutch) (.205”) 1981-86	1	4207209
148	32564	Pressure Plate, [A404] (Forward Clutch) (.265”) 1978-80	1	
148	32566	Pressure Plate, [A404] (Forward Clutch) (.205”) 1978-80	1	
148	32566A	Pressure Plate, [A404] (Forward Clutch) (.185”) 1978-80	1	
148	32567	Pressure Plate, [A413 / A470 / A670] (Forward Clutch) (.265”) 1981-83	1	4269619
148	32567A	Pressure Plate, [A413 / A420 / A670] (Forward Clutch) (.205”) 1984-Up	1	
148	32568A	Pressure Plate, [A413 / A420 / A670] (Forward Clutch) (.356”) 1984-Up	1	
149	32568	Reaction Plate, [A404] (Forward Clutch) (Beveled) (4-1/4”ID) 1981-83	1	5205704
149	32565	Reaction Plate, [A404] (Forward Clutch) (Beveled) (4-1/8”ID) 1978-80	1	4269618
		VALVE BODY KITS		
	K32908S	Valve Body Kit, [A404 / A413 / A470 / A670] (3 Stages)	1	Superior
	K32908	Valve Body Kit, [A470 / A670] (Lock-Up) (*With Dirt Diaper Fixes)	1	Transgo
		OIL SEALING RINGS		
	K32200	Ring Kit, [A404] (Metal) 1978-80	1	
	K32200B	Ring Kit, [A413 / A470 / A670] 1981-Up	1	
	K32200C	Ring Kit, [A404 / A413 / A470 / A670] (Combo) 1978-Up	1	
177	12853L	Ring, [A404 / A413] (Input Shaft) (1.062”OD) (Metal) 1978-85	1-2	1401221
177	12853N	Ring, [A404 / A413] (Input Shaft) (1.062”OD) (Teflon) 1978-85	1-2	4269592
177	32247	Ring, [A413 / A470 / A670] (Input Shaft) (.940”OD) (Metal) 1986-Up	2-3	4377047
177	32247T	Ring, [A413 / A470 / A670] (Input Shaft) (.940”OD) (Teflon) 1986-Up	2-3	
178	32270	Ring, [A404 / A413 / A470 / A670] (Forward Clutch Drum) (1.750”OD) (Metal) 1978-Up	1	5205697
178	32270T	Ring, [A404 / A413 / A470 / A670] (Forward Clutch Drum) (1.750”OD) (Teflon) 1978-Up	1	
179	32210	Ring, [A404 / A413 / A470 / A670] (Stator Support) (2.180”OD) (Metal) 1978-Up	2	5212305
189	32260	Ring, [A404 / A413 / A470 / A670] (Governor Support) (2.122”OD) (Metal) 1978-Up	3	5212092
189	32260T	Ring, [A404 / A413 / A470 / A670] (Governor Support) (2.122”OD) (Teflon) 1978-Up	3	4269954

A404/A413/A470/A670

191	12853L	Ring, [A404 / A413 / A470 / A670] (Accumulator) (Small) (Metal) 1978-80	1	
191	12853T	Ring, [A413 / A470 / A670] (Accumulator) (Small) (Teflon) 1981-Up	1	
192	12770	Ring, [A404 / A413 / A470 / A670] (Accumulator) (Large) (2.000"OD) (Metal) 1978-Up	2	1315158
192	12770T	Ring, [A404 / A413 / A470 / A670] (Accumulator) (Large) (2.000"OD) (Teflon) 1978-Up	2	
194	12851	Ring, [A413 / A470 / A670] (Kickdown Servo) (Small) (1.000"OD) (Metal) 1981-Up	1	3410374
194	12851T	Ring, [A413 / A470 / A670] (Kickdown Servo) (Small) (1.000"OD) (Teflon) 1981-Up	1	
194	2716A	Ring, [A404 / A413] (Kickdown Servo Piston) (Small) (1.250"OD) (Metal) 1978-80	1	1672287
195	32289	Ring, [A404 / A413 / A470 / A670] (Kickdown Servo) (Large) (1.898"OD) (Metal) 1978-80	1-2	5212049
195	2936B	Ring, [A404 / A413 / A470 / A670] (Kickdown Servo) (Large) (2.125"OD) (Metal) 1981-Up	1	1636470
195	2936T	Ring, [A404 / A413 / A470 / A670] (Kickdown Servo) (Large) (2.125"OD) (Teflon) 1981-Up	1	3743014
		WASHERS & BEARINGS		
	K32907	Washer Kit, [A404] 1978-80	1	
	K32907A	Washer Kit, [A404 / A413 / A470 / A670] 1981-Up	1	
211	32600	Washer, [A404 / A413 / A470 / A670] (Stator to Direct Drum) (Fiber) 1978-Up	1	
229	32620	Washer, [A404 / A413 / A470 / A670] (Forward Drum to Direct Drum) (Fiber) 1978-Up	1	
232	32630	Washer, [A404 / A413 / A470 / A670] (Forward Drum to Hub) 1978-Up	1	
238	32631	Washer, [A404] (Front and Rear Planet) (4-Tab) 1978-80	4	
238	32631A	Washer, [A413 / A470 / A670] (Front Planet) (4-Tab) 1981-Up	4	
238	32613B	Washer, [A470 / A670] (Front Planet) (5-Tab) 1996-Up	1	4659163
242	32636	Race, [A404] (Sun Shell) (With 29 Inner Teeth) 1978-80	1	5205737
242	32636A	Race, [A413 / A470 / A670] (Sun Shell) (With 3 Inner Teeth) 1981-Up	1	5224236
254	32976	Cone Bearing, [A404 / A413 / A470 / A670] (Rear Ring Gear to Case & Drive Gear to Case) (1.378"ID) (23-Rollers)	2	L68149
254	K32976A	Bearing & Race Kit, [A404 / A413 / A470 / A670] (Rear Ring Gear to Case & Drive Gear to Case) (1.378" ID) 1978-Up	2	SET 17
255	32975	Cup Race, [A404 / A413 / A470 / A670] (Rear Ring Gear to Case & Drive Gear to Case) 78-Up	2	L68111
257	32635	Washer, [A404 / A413 / A470 / A670] (Rear Band Drum to Case) (Fiber) 1978-Up	1	5205772
268	32623	Washer, [A404 / A413 / A470 / A670] (Input Shaft to Output Shaft) (.079") (Blue) 1978-Up	1	
268	32623A	Washer, [A404 / A413 / A470 / A670] (Input Shaft to Output Shaft) (.085") (Silver) 1978-Up	1	
268	32623B	Washer, [A404 / A413 / A470 / A670] (Input Shaft to Output Shaft) (.093") (Yellow) 1978-Up	1	
271	32609	Washer, [A404 / A413 / A470 / A670] (Under Output Shaft Nut) 1978-Up (*Also Fits Pinion Shaft Nut)	1-2	5222010
273	32978	Cup Race, [A404 / A413 / A470 / A670] (Differential / Pinion / Driven Transfer Gear) 1978-Up	4	JL69310
273	32978A	Cup Race, [A413 / A470 / A670] (Differential) (*For Larger ID Bearing) 1996-Up	1	NP714580
274	32977	Bearing, [A404 / A413 / A470 / A670] (Differential / Pinion / Both Transfer Gears) (22-Rollers) (1.497"ID) 1978-Up	4	JL69349
274	K32978	Bearing & Race Kit, [A404 / A413 / A470 / A670] (Differential / Pinion / Both Transfer Gears) (22-Rollers) (1.497"ID) 1978-Up	4	SET 11
274	K32978A	Bearing & Race Kit, [A413 / A470 / A670] (Differential) (19-Rollers) (1.625"ID) (Larger ID Differential) 1996-Up	1	
274	32977A	Bearing, [A413 / A470 / A670] (Differential) (19-Rollers) (1.625"ID) (Larger ID Differential) 96-Up	1	NP889967
	32125LRB	Support Bearing W/Seal, [A404 / A413 / A470 / A670] (Axle Stabilizer) 1978-Up	1	Teckpak
276	32539A	Spacer, [A404 / A413 / A470 / A670] (Under Driven Transfer Gear)	1	
276	32539-Z5	Shim Kit, [A404 / A413 / A470 / A670] **(*Use With 32539A)** (.005") (10 Per Kit)	1	Sonnax
277	32609	Washer, [A404 / A413 / A470 / A670] (Under Pinion Shaft Nut)	1	
278	32539B	Spacer, [A404] (Rear Planet Ring Gear to Drive Gear) (.037") 1978-80	1	4207166
278	35539-Z5	Shim Kit, [A404 / A413 / A470 / A670] (.005") (10 Per Kit)	1	Sonnax

278	32539C	Spacer, [A413 / A470 / A670] (Rear Planet Ring Gear to Drive Transfer Gear) (.498") 1981-Up	1	4207162
290	39539-Z5	Shim, [A404 / A413 / A470 / A670] (Differential Bearing Race Shim) (.005") (5 Per Kit)	1	Sonnax
		GASKETS & RUBBER COMPONENTS		
300	32170	Gasket, [A404 / A413 / A470 / A670] (Bottom Pan) 1978-Up (Cork)	1	5224052
300	32170D	Gasket, [A404 / A413 / A470 / A670] (Bottom Pan) 1978-Up (Fiber) (Duraprene)	1	
303	32165	Gasket, [A404 / A413 / A470 / A670] (Differential Cover) 1978-up (Cork)	1	5212276
303	32165D	Gasket, [A404 / A413 / A470 / A670] (Differential Cover) 1978-Up (Fiber) (Duraprene)	1	
303	32165F	Gasket, [A404 / A413 / A470 / A670] (Differential Cover) 1978-Up (Fiber) (Farpack)	1	
304	32169	Gasket, [A404 / A413 / A470 / A670] (Transfer Gear Cover) (Cork) 1978-Up	1	5222142
304	32169F	Gasket, [A404 / A413 / A470 / A670] (Transfer Gear Cover) (Fiber) (Farpak) 1978-Up	1	
310	32100	Gasket, [A404 / A413 / A470 / A670] (Pump) 1978-Up	1	5212306
311	32102	O-Ring, [A404 / A413 / A470 / A670] (Pump) 1978-Up	1	5205660
326	32167	Gasket, [A404 / A413 / A470 / A670] (Filter) (Foam Type) 1978-Up	1	4269671
334	32145	Lip Seal, [A404 / A413 / A470 / A670] (Forward Clutch Piston) (Inner) 1978-Up	1	5212373
335	32140	Lip Seal, [A404 / A413 / A470 / A670] (Forward Clutch Piston) (Outer) 1978-Up	1	5205701
336	32114	Lip Seal, [A404 / A413 / A470 / A670] (Direct Clutch Piston) (Inner) 1978-Up	1	5205670
337	32110	Lip Seal, [A404] (Direct Clutch Piston) (Outer) 1978-80	1	5205671
337	13308	Lip Seal, [A413 / A470 / A670] (Direct Clutch Piston) (Outer) 1981-Up	1	4058487
348	32168	O-Ring, [A404 / A413 / A470 / A670] (Extension Housing) 1978-Up	1	6500111
	13207	Seal, [A404 / A413 / A470 / A670] (Throttle Lever Shaft) 1978-Up	1	2466548
363	13335	Lip Seal, [A404 / A413 / A470 / A670] (Reverse Servo) (Viton) 1978-Up	1	
368	13171	O-Ring, [A404 / A413 / A470 / A670] (Speed-O Adapter) 1978-Up	1	5212152
	3291	O-Ring, [A404 / A413 / A470 / A670] (Filler Tube) 1978-Up	1	6264902
375	32155	O-Ring, [A404 / A413 / A470 / A670] (Pinion Bearing Retainer) 1978-Up	1-2	6500169
		TECHNICAL MANUALS		
	TMA404A470	Technical Manual, [A404 / A413 / A470 / A670]	1	ATSG
		ELECTRICAL COMPONENTS		
410	K2627C	Neutral Switch, [A404 / A413 / A470 / A670] (Short) 1978-Up	1	3747361
	K22987C	Repair Harness, [A404 / A413 / A470 / A670] (NSS) 1978-Up	1	
425	32329	Solenoid, [A413 / A670] (TCC) (Lock-Up) 1987-Up	1	4377005
		MISC. COMPONENTS		
	10000-03K	E-Clip, [A404 / A413 / A470 / A670] (Shift Linkage)	1	
	32843	Vent, [A413 / A470 / A670] (Case) 1995-Up	1	
		HARD PARTS		
500	32537	Pump, [A404 / A413 / A470] (1-Ring on Input Shaft) (With 2-Lugs on Inner Gear) 1978-85	1	
500	32537A	Pump, [A413 / A470 / A670] (2-Ring Input Shaft) (25 Teeth Inner Gear) (2-Flats For Hub) 86-Up	1	
500	32537B	Pump, [A413 / A470 / A670] (3-Ring Input Shaft) (25 Teeth Inner Gear) (2-Flats For Hub) 86-Up (*Will Retro Late Model Dual Cycloidal)	1	
500	32537C	Pump, [A413 / A470 / A670] (12 Teeth Inner Gear) (2-Flats For Hub) (Dual Cycloidal) 2000-Up	1	
510	32535	Pump Body, [A404 / A413 / A470] (With 2-Lugs on Inner Gear) 1978-85	1	5224036
510	32535A	Pump Body, [A413 / A470 / A670] (With 2-Flats on Inner Gear) (25 Teeth on Inner Gear) 1986-Up	1	4377996
510	32535C	Pump Body, [A413 / A470 / A670] (With 2-Flats on Inner Gear) (12 Teeth on Inner Gear) (Dual Cycloidal) 2000-Up	1	
520	32536	Stator, [A404 / A413 / A470] (1-Ring on Input Shaft) 1978-85	1	5222412
520	32536A	Stator, [A413 / A470 / A670] (2-Ring Input Shaft) (*Fits Body With 25 Teeth Inner Gear) (2-Flats for Converter Hub) 1986-Up	1	4377120

520	32536B	Stator, [A413 / A470 / A670] (3-Ring Input Shaft) (*Fits Body With 25 Teeth Inner Gear) (2-Flats for Converter Hub) 1986-Up	1	
520	32536C	Stator, [A413 / A470 / A670] (*Fits Body With 12 Teeth Inner Gear) (Dual Cycloidal) 2000-Up	1	
		PUMP COMPONENTS		
530	K32201	Pump Gear Set, [A404 / A413 / A470] (.588") (With Lugs) 1978-85	1	
530	K32201D	Pump Gear Set, [A413 / A470 / A670] (.589") (With Milled Flats) (25 Teeth Inner Gear) 1986-Up	1	
530	K32201E	Pump Gear Set, [A413 / A470 / A670] (.591") (With Milled Flats) (25 Teeth Inner Gear) 1986-Up	1	
		HARD PARTS (Continued)		
554	32570	Drum, [A404] (Forward Clutch) (3 Clutch) 1978-80	1	5212320
554	32570B	Drum, [A413 / A470] (Forward Clutch) (3 Clutch) 1981-E86	1	
554	32570AB	Drum, [A413 / A470] (Forward Clutch) (4 Clutch) 1981-E86	1	
554	32570D	Drum, [A413 / A470] (Forward Clutch) (3 Clutch) L1986-Up	1	
554	32570C	Drum, [A670] (Forward Clutch) (4 Clutch) L1986-Up	1	4248916
555	32560	Drum, [A404] (Direct Clutch) 1978-81	1	5269510
555	32560A	Drum, [A413 / A470] (Direct Clutch) 1982-85	1	5224316
555	32560C	Drum, [A670] (Direct Clutch) (4 Clutch) L1986-Up	1	
555	32560B	Drum, [A413 / A470] (Direct Clutch) (3 Clutch) L1986-Up	1	
556	32156	Drum, [A404] (Low / Reverse) (Band Drum) 1978-80	1	
556	32156A	Drum, [A413 / A470 / A670] (Low / Reverse) (Band Drum) 1981-Up	1	4207117
582	32134	Planet, [A404] (Front) (29 Teeth Sun Gear) 1978-80	1	4567210
582	32134A	Planet, [A413 / A470 / A670] (Front) (4 Gear) (36 Teeth Sun Gear) 1981-95	1	4269941
582	32134C	Planet, [A670] (Front) (5 Gear) (36 Teeth Sun Gear) 1996-Up	1	4348900
583	K32751A	Planet Kit, [A413 / A470 / A670] (Contains: # 602 / 592 / 582 / 622 / 612 / 584 / 254 / 678) 81-95	1	
584	32652	Planet, [A404 / A413 / A470 / A670] (Rear) (4 Gear) (Square Housing) 1978-95	1	5205740
584	32652A	Planet, [A670] (Rear) (4 Gear) (Round Housing) 1996-Up	1	
592	32150	Ring Gear, [A404] (Front) (Annulus) 1978-80	1	5212201
592	32150A	Ring Gear, [A413 / A470 / A670] (Front) (Annulus) 1981-Up	1	5224310
594	32151	Ring Gear, [A404 / A413 / A470 / A670] (Rear) (Annulus) (*Washer Type) 1978-Up	1	5222047
602	32149	Hub, [A404] (Front Ring Gear) 1978-81	1	5212203
602	32149A	Hub, [A413 / A470 / A670] (Front Ring Gear) 1981-Up	1	5224070
612	32654	Sun Gear, [A404] (29 Teeth / 29 Teeth) 1978-80	1	5205733
612	32654A	Sun Gear, [A413 / A470 / A670] (29 Teeth / 36 Teeth) 1981-Up	1	5224192
622	32144	Shell, [A404] 1978-80	1	4207195
622	32144A	Shell, [A413 / A470 / A670] 1981-Up	1	
654	K32960	Sprag Kit, [A404 / A413 / A470 / A670] (Spring & Rollers)	1	4186886
664	K32961M	Inner Race, [A404] (Rear Sprag) (*Bolt-In Replacement) 1978-80	1	
664	K32961AM	Inner Race, [A413 / A470 / A670] (Rear Sprag) (Bolt-In) 1981-Up	1	
670	32607	Shaft, [A404 / A413 / A470] (Input) (23-Splines) (1-Ring) 1978-85	1	5222400
670	32607A	Shaft, [A413 / A470] (Input) (23-Splines) (2-Ring) L1986-Up	1	4377106
670	32607B	Shaft, [A413 / A470 / A670] (Input) (22-Splines) (3-Ring) (Lock-Up) 1987-Up	1	4348397
678	32160	Shaft, [A404] (Output) (6-1/4" Long) 1978-80	1	5222401
678	32160A	Shaft, [A413 / A470 / A670] (Output) (6-1/2" Long) 1981-Up	1	4348932
680	32204	Governor, [A404 / A413 / A470 / A670] 1978-Up	1	4207055
681	32204-03K	Spring & Bracket, [A413 / A470 / A670] (Governor) 1978-Up	1	Sonnax

	32919	Spring, [A404 / A413 / A470 / A670] (Governor) (“Anti-Stick”) 1978-Up	1	
685	32203	Support, [A404 / A413 / A470 / A670] (Governor) (1/2” Thick Lugs) 1978-Up	1	5212249
685	32203A	Support, [A404 / A413 / A670] (Governor) (5/8” Thick Lugs) 1978-Up	1	
687	32202	Retainer, [A404 / A413 / A470 / A670] (Governor Support) 1978-Up	1	5212371
698	32177	Oil Baffle, [A404 / A413 / A470 / A670] (Inside Differential Retainer)	1	5222256
698	32834	Oil Baffle, [A404 / A413 / A470 / A670] (Inside Extension Housing)	1	4567494
710	32197	Gear, [A404 / A413 / A470 / A670] (Output) (49 Teeth) 1978-Up	1	4131048
710	32197A	Gear, [A404 / A413 / A470 / A670] (Output) (57 Teeth) 1978-Up	1	4186889
710	32197B	Gear, [A404 / A413 / A470 / A670] (Output) (56 Teeth) 1978-Up	1	4205871
710	32197C	Gear, [A404 / A413 / A470 / A670] (Output) (53 Teeth) 1978-Up	1	4186871
710	32197D	Gear, [A404 / A413 / A470 / A670] (Output) (45 Teeth) 1978-Up	1	
712	32196	Gear, [A404 / A413 / A470 / A670] (Transfer Driven) (60 Teeth) 1978-Up	1	4131048
712	32196A	Gear, [A404 / A413 / A470 / A670] (Transfer Driven) (52 Teeth) 1978-Up	1	
712	32196B	Gear, [A404 / A413 / A470 / A670] (Transfer Driven) (56 Teeth) 1978-Up	1	
712	32196C	Gear, [A404 / A413 / A470 / A670] (Transfer Driven) (54 Teeth) 1978-Up	1	
712	32196D	Gear, [A404 / A413 / A470 / A670] (Transfer Driven) (47 Teeth) 1978-Up	1	
716	32180	Differential Housing, [A404 / A413] (Without Ring Gear) (8-Bolt) 1978-82 (*Axle Gear Washer Round No Tab)	1	4186888
716	32180A	Differential Housing, [A404 / A413 / A470] (Without Ring Gear) (8-Bolt) 1981-E87 (*Axle Gear Washer Has 1-Tab)	1	4269768
716	32180B	Differential Housing, [A413 / A470 / A670] (Without Ring Gear) (12-Bolt) L1987-Up (22-Roller Bearings Both Sides) (*Axle Does Not Use a Snap Ring to Hold it to the Differential)	1	
716	32180C	Differential Housing, [A413 / A470 / A670] (Without Ring Gear) (12-Bolt) (19-Roller Bearing on Ring Gear Side) (Large ID Bearing) (*Axle Does Not Use a Snap Ring to Hold it to the Differential) 1996-Up	1	
716	32108CA	Differential Housing, [A413 / A470 / A670] (Without Ring Gear) (12-Bolt) (19-Roller Bearing on Ring Gear Side) (Large ID Bearing) (*Axle Uses a Snap Ring to Hold it to the Differential) 96-Up	1	
716	32108BA	Differential Housing, [A413 / A470 / A670] (Without Ring Gear) (12-Bolt) (22-Roller Bearing on Both Sides) (*Axle has a Snap Ring to Hold it to the Differential) L1987-Up	1	
		DIFFERENTIAL COMPONENTS		
717	4412050	Spider Gear, [A404 / A413 / A470] (Differential) 1981-E87	2	
717	4207073	Shim, [A404 / A413 / A470 / A670] (Differential Spider Gear) 1981-E87	1	
717	4412048	Side Gear, [A404 / A413 / A470] (Differential) 1981-E87	1	4412048
717	92850	Pin, [A670] (Differential) L1987-Up	1	
717	4659502	Spider Gear, [A670] (Differential) L1987-Up	2	4659502
717	4348679AB	Side Gear, [A670] (Differential) L1987-Up	2	4348679
717	K32990	Gear Kit, [A404 / A413 / A470] (8-Bolt) (Side & Spider Gears With Washers & Pins) 1981-E87	1	
717	K32990A	Gear Kit, [A670] (12-Bolt) (Side & Spider Gears With Washers & Pins) L1987-Up	1	
717	92853	Retainer, [A404 / A413 / A470 / A670] (Differential Pin) (Bolts to Housing) L1987-Up	2	
		HARD PARTS (Continued)		
720	32198	Ring Gear, [A404 / A413 / A470] (Differential) (54 Teeth) (8-Bolt) (No Groove)	1	
720	32198A	Ring Gear, [A404 / A413 / A470] (Differential) (55 Teeth) (8-Bolt) (No Groove)	1	
720	32198AA	Ring Gear, [A404 / A413 / A470] (Differential) (55 Teeth) (8-Bolt) (2-Grooves)	1	
720	32198B	Ring Gear, [A404 / A413 / A470] (Differential) (61 Teeth) (8-Bolt) (1-Groove)	1	
720	32198BA	Ring Gear, [A404 / A413 / A470] (Differential) (61 Teeth) (8-Bolt) (3-Grooves)	1	
720	32198BB	Ring Gear, [A404 / A413 / A470] (Differential) (61 Teeth) (8-Bolt) (2-Grooves)	1	
720	32198C	Ring Gear, [A404 / A413 / A470] (Differential) (60 Teeth) (8-Bolt) (3-Narrow Grooves)	1	

720	32198CA	Ring Gear, [A404 / A413 / A470] (Differential) (60 Teeth) (8-Bolt) (2-Narrow & 1-Wide Groove)	1	
720	32198CB	Ring Gear, [A404 / A413 / A470] (Differential) (60 Teeth) (8-Bolt) (4-Grooves)	1	
720	32198CC	Ring Gear, [A404 / A413 / A470] (Differential) (60 Teeth) (8-Bolt) (6-Grooves)	1	
720	32198D	Ring Gear, [A670] (Differential) (60 Teeth) (12-Bolt) (No Groove)	1	
720	32198DA	Ring Gear, [A670] (Differential) (60 Teeth) (12-Bolt) (2-Grooves)	1	
720	32198E	Ring Gear, [A670] (Differential) (61 Teeth) (12-Bolt) (1-Groove)	1	
720	32198EA	Ring Gear, [A670] (Differential) (61 Teeth) (12-Bolt) (3-Grooves)	1	
725	32176	Retainer, [A404 / A413 / A470] (Differential) (Aluminum) 1978-86	1	4205855
725	32176A	Retainer, [A404 / A413 / A470] (Differential) (Steel) (3-3/4" Tall) 1987-Up	1	
725	32176B	Retainer, [A670] (Differential) (12-Bolt Differential With 19-Roller Bearing on Ring Gear Side) (Large ID Bearing) 1996-Up	1	
727	32196R	Retainer, [A404 / A470 / A670] (Transfer Gear Nut) (*Keeps Nut From Backing Off)	1	
727	32196P	Plate, [A404 / A413 / A470 / A670] (Transfer Gear Retainer) (*This Plate Goes With 32196R)	1	
730	32199	Pinion, [A404 / A413 / A470 / A670] (18 Teeth) (No Groove)	1	
730	32199A	Pinion, [A404 / A413 / A470 / A670] (18 Teeth) (1-Groove)	1	
730	32199B	Pinion, [A404 / A413 / A470 / A670] (18 Teeth) (2-Grooves)	1	
730	32199C	Pinion, [A404 / A413 / A470 / A670] (19 Teeth) (No Groove)	1	
730	32199D	Pinion, [A404 / A413 / A470 / A670] (19 Teeth) (1-Groove)	1	
730	32199E	Pinion, [A404 / A413 / A470 / A670] (20 Teeth) (No Groove) (2.800" OD Gear)	1	
730	32199F	Pinion, [A404 / A413 / A470 / A670] (20 Teeth) (1-Groove)	1	
730	32199G	Pinion, [A404 / A413 / A470 / A670] (20 Teeth) (2-Grooves)	1	
730	32199H	Pinion, [A404 / A413 / A470 / A670] (20 Teeth) (3-Grooves)	1	
730	32199J	Pinion, [A404 / A413 / A470 / A670] (20 Teeth) (4-Grooves)	1	
730	32199K	Pinion, [A404 / A413 / A470 / A670] (21 Teeth) (No Groove) (2.850"OD Gear)	1	
730	K32199L	Ring & Pinion, [A404 / A413 / A470 / A670] (21 Teeth & 60 Teeth) (No Groove) (2.800"OD Pinion Gear) (12-Bolt Ring Gear)	1	
730	32199L	Pinion, [A404 / A413 / A470 / A670] (21 Teeth) (No Groove) (2.800"OD Gear)	1	
730	K32199K	Ring & Pinion, [A404 / A413 / A470 / A670] (21 Teeth & 60 Teeth) (No Groove) (2.850"OD Pinion Gear) (12-Bolt Ring Gear)	1	
730	32199M	Pinion, [A404 / A413 / A470 / A670] (21 Teeth) (3-Narrow Grooves)	1	
730	32199N	Pinion, [A404 / A413 / A470 / A670] (21 Teeth) (2-Narrow & 1-Wide Grooves)	1	
730	K32199M	Ring & Pinion, [A404 / A413 / A470 / A670] (21 Teeth Pinion) (60 Teeth) (8-Bolt Ring Gear)	1	
730	32199P	Pinion, [A404 / A413 / A470 / A670] (21 Teeth) (4-Grooves)	1	
730	32199Q	Pinion, [A404 / A413 / A470 / A670] (21 Teeth) (6-Grooves)	1	
735	32120	Retainer, [A404 / A413] (Pinion) (Aluminum) (Seal Type) 1978-82	1	4269688
735	32120A	Retainer, [A413 / A470 / A670] (Pinion) (Aluminum) (No Seal Type) 1983-Up	1	4269688
		VALVE BODIES (REBUILT)		
740	CR-2740	Valve Body, [A404 / A413 / A470] (Non Lock-Up) (No Switch) 1981-86	1	
740	CR-2741	Valve Body, [A413 / A470 / A670] (With Lock-Up) (Yellow Switch) 1987-99	1	
740	CR-2741B	Valve Body, [A413 / A470 / A670] (With Lock-Up) (With By-Pass Cooler Tube) 1999-Up	1	
740	CR-2742	Valve Body, [A413 / A470 / A670] (Non Lock-Up) (Red Switch) 1987-Up	1	
		VALVE BODIES		
740	32229	Valve Body, [A404 / A413 / A470] (Non Lock-Up) 1978-87	1	
740	32229A	Valve Body, [A413 / A470 / A670] (Lock-Up) (With Solenoid) (No Tubes) 1987-Up	1	

740	32229B	Valve Body, [A413 / A470 / A670] (Lock-Up) (With Solenoid) (With 3-Tubes) 1998-Up	1	
		VALVE BODY COMPONENTS		
741	32229-01K	Throttle Valve Kit, [A404 / A413 / A470 / A670] (Oversize) (Valve, Sleeve, Plunger, Spring, and 3-Shims) **(*Requires: F-22771-TL & VB-FIX)**	1	Sonnax
		HARD PARTS (Continued)		
758	32804	Differential Cover, [A404 / A413] (With Plug) 1978-80	1	4269631
758	32804A	Differential Cover, [A413 / A470 / A670] (Without Plug) 1981-Up	1	4471574
759	32803	Rear Cover, [A404 / A413 / A670] (Transfer Gear) 1978-85 (Is Flat on Back)	1	4295929
759	32803A	Rear Cover, [A413 / A470 / A670] (Transfer Gear) 1986-94 (1-Raised Hump Where Output Shaft Nut Rides)	1	4471572
759	32803B	Rear Cover, [A470 / A670] (Transfer Gear) 1995-Up (2-Stepped Hump Where Output Shaft Nut Rides)	1	
760	32173	Case, [A404] (1.7 Liter) (Non Lock-Up) 1978-82	1	5224047
760	32173A	Case, [A470] (2.6 Liter) (Non Lock-Up) 1980-83	1	5224189
760	32173B	Case, [A413] (2.2 Liter) (Non Lock-Up) 1979-82	1	4224199
760	32173C	Case, [A404] (1.7 Liter) (Non Lock-Up) L1982-Up	1	
760	32173D	Case, [A413] (1.6 Liter) (Non Lock-Up) 1983-Up	1	4269996
760	32173E	Case, [A413] (2.2 / 2.5 Liter) (Non Lock-Up) (With 3-Threaded Starter Holes) 1983-Up	1	
760	32173EA	Case, [A413] (2.2 / 2.5 Liter) (Non Lock-Up) (With 1-Threaded Starter Hole) 1983-Up	1	
760	32173F	Case, [A470] (2.6 Liter) (Non Lock-Up) 1983-Up	1	
760	32173G	Case, [A413] (2.2 / 2.5 Liter) (Lock-Up) (With 1-Threaded Starter Hole) 1987-Up	1	
760	32173M	Case, (2.0 / 2.4 Liter) (Top Bolts 6") (Mitsubishi) 1995-99 (With Vent)	1	
760	32173MA	Case, (2.0 / 2.4 Liter) (Top Bolts 6") (Mitsubishi) 1995-Up (Without Vent)	1	
760	32173MB	Case, (2.0 / 2.4 Liter) (Top Bolts 6") (Mitsubishi) 2000-Up (Lock-Up) (With Vent) (Threaded Boss at the Same Level as the Shift Lever Seal) (Valve Body With 3-Tubes)	1	
760	32173MC	Case, (2.0 / 2.4 Liter) (Top Bolts 6") (MItsubishi) 2000-Up (Lock-Up) (With Vent) (Threaded Boss at the Same Level as the Shift Lever Seal) (Valve Body With 2-Tubes)	1	
760	32173H	Case, [A670] (3.0 Liter) (2WD) (Lock-Up) 1987-94	1	4531126
760	32173J	Case, [A670] (3.0 Liter) (2WD & 4x4) (Lock-Up) (With Vent) 1995-Up (With Sensor Hole)	1	
760	32173JA	Case, [A670] (3.0 Liter) (2WD & 4x4) (Lock-Up) (Without Vent) 1995-Up (With Sensor Hole)	1	
760	32173JB	Case, [A670] (3.0 Liter) (V-6) (2WD & 4x4) (Lock-Up) 1995-Up (No Sensor Hole)	1	
761	K32173J	Case Kit, [A670] (*Converts 1987-94 (3.0L) to 1995-Up) **(*Must Be Machined For Crank Sensor & Filler Tube Hole)** (With Bracket, Crank Sensor Sleeve, Filler Tube Bracket, Vent & Bolts)	1	
765	32802	Pan, [A404 / A413] (Shallow) 1978-82	1	5224349
765	32802A	Pan, [A413 / A470 / A670] (Deep) 1983-Up	1	4471573
770	32371	Extension Housing, [A404 / A413] 1978-82	1	
770	32371A	Extension Housing, [A413 / A470 / A670] 1983-Up	1	
774	32922	Housing, [A404 / A413 / A470 / A670] (Speed-O)	1	
774	32958	Housing, [A413 / A470 / A670] (Speed-O) (2-Prong) (Electric) (VSS)	1	
774	32958A	Housing, [A470 / A670] (Speed-O) (3-Round Prongs) (VSS)	1	
774	32958R	Housing, [A470 / A670] (Speed-O) (3-Flat Prongs) (VSS)	1	
	B-62	Bolt, [A404 / A413 / A470 / A670] (Flex Plate to Converter)	AR	
795	32199N	Nut, [A404 / A413 / A470 / A670] (Pinion Shaft)	1	
796	32160N	Nut, [A404 / A413 / A470 / A670] (Output Shaft)	1	
	K32928	Snap Ring Kit, [A404 / A413 / A470 / A670] 1978-Up	1	45680
876	32601B	Snap Ring, [A413 / A470 / A670] (Forward Clutch) (.048") 1978-Up	1	

A404/A413/A470/A670

876	12601	Snap Ring, [A413 / A470 / A670] (Forward Clutch) (060") 1978-Up	1	
876	32601D	Snap Ring, [A413 / A470 / A670] (Forward Clutch) (.076") 1978-Up	1	
876	32601E	Snap Ring, [A413 / A470 / A670] (Forward Clutch) (.087") 1978-Up	1	
905	K32989	Servo Assembly, [A404 / A413 / A470 / A670] (Kickdown) 1978-Up	1	
906	32891	Spring, [A404 / A413 / A470 / A670] (Kickdown Servo) 1978-Up	1	
907	32989	Piston, [A404 / A413 / A470 / A670] (Kickdown Servo) 1978-Up	1	
909	32989R	Retainer, [A404 / A413 / A470 / A670] (Kickdown Servo) 1978-Up	1	
910	K32987	Servo Assembly, [A404 / A413 / A470 / A670] (Rear) 1978-80	1	
910	K32987A	Servo Assembly, [A404 / A413 / A470 / A670] (Rear) 1981-Up	1	
911	32892	Spring, [A404 / A413 / A470 / A670] (Rear Servo Return)	1	
912	32987	Piston, [A404 / A413 / A470 / A670] (Rear Servo)	1	
914	32987R	Retainer, [A404 / A413 / A470 / A670] (Rear Servo Spring)	1	
916	32714	Strut, [A404 / A413 / A470 / A670] (Kickdown Band) (1-1/8" Long)	1	
917-2	32712	Strut, [A404 / A413 / A470 / A670] (Rear Band Apply) (2-3/16" Long)	1	Sonnax
919	32714B	Adjustable Bolt, [A404 / A413 / A470 / A670] (Kickdown Band)	1	
920	32712B	Adjustable Bolt, [A404 / A413 / A470 / A670] (Rear Band)	1	
925	K32988	Accumulator Assembly, [A404 / A413 / A470 / A670] 1978-80	1	
925	K32988A	Accumulator Assembly, [A404 / A413 / A470 / A670] 1981-Up	1	
926	32703	Spring, [A404 / A413 / A470 / A670] (Accumulator) (Blue) 1978-Up	1	
927	32988A	Piston, [A404 / A413 / A470 / A670] (Accumulator) (Aluminum)	1	
927	32988P	Piston, [A404 / A413 / A470 / A670] (Accumulator) (Plastic)	1	
929	32988R	Retainer, [A404 / A413 / A470 / A670] (Accumulator Spring)	1	
964	32552	Piston, [A404 / A413 / A470 / A670] (Forward Clutch) 1978-Up	1	
965	32561	Piston, [A404 / A413 / A470 / A670] (Direct Clutch) 1978-80	1	
965	32561A	Piston, [A404 / A413 / A470 / A670] (Direct Clutch) 1981-85	1	
965	32561B	Piston, [A404 / A413 / A470 / A670] (Direct Clutch) 1986-Up	1	
974	32745	Spring, [A404 / A413 / A470 / A670] (Forward Clutch Return) (4.950"OD) 1978-Up	1	
974	32745A	Spring, [A404 / A413 / A470 / A670] (Forward Clutch Return) (4.970"OD) 1984-Up	1	
975	32562	Spring, [A404 / A413 / A470 / A670] (Direct Clutch Return) 1978-Up	1	
985	32930	Retainer, [A404 / A413 / A470 / A670] (Direct Clutch Spring) 1978-Up	1	
995	K32678	Park Pawl Assembly, [A404 / A413 / A470 / A670]	1	
999	K32679	Tube Set, [A404 / A413 / A470 / A670] (Valve Body to Governor Support) (Qty 2)	1	

NOTES

A604 (40TE/41TE-FWD/41AE-AWD)

FWD 4 Speed

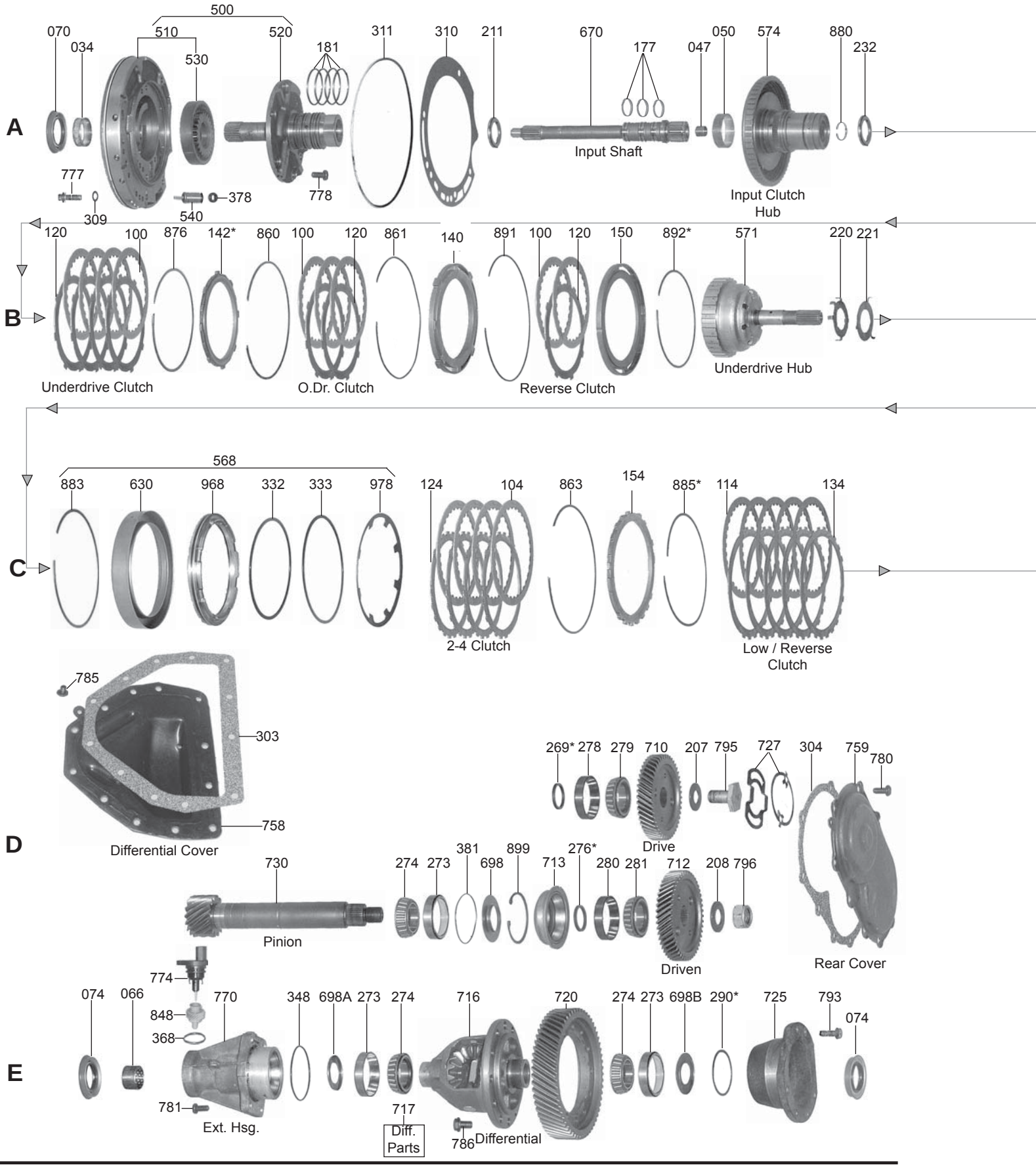

A604 (40TE/41TE-FWD/41AE-AWD)

FWD 4 Speed

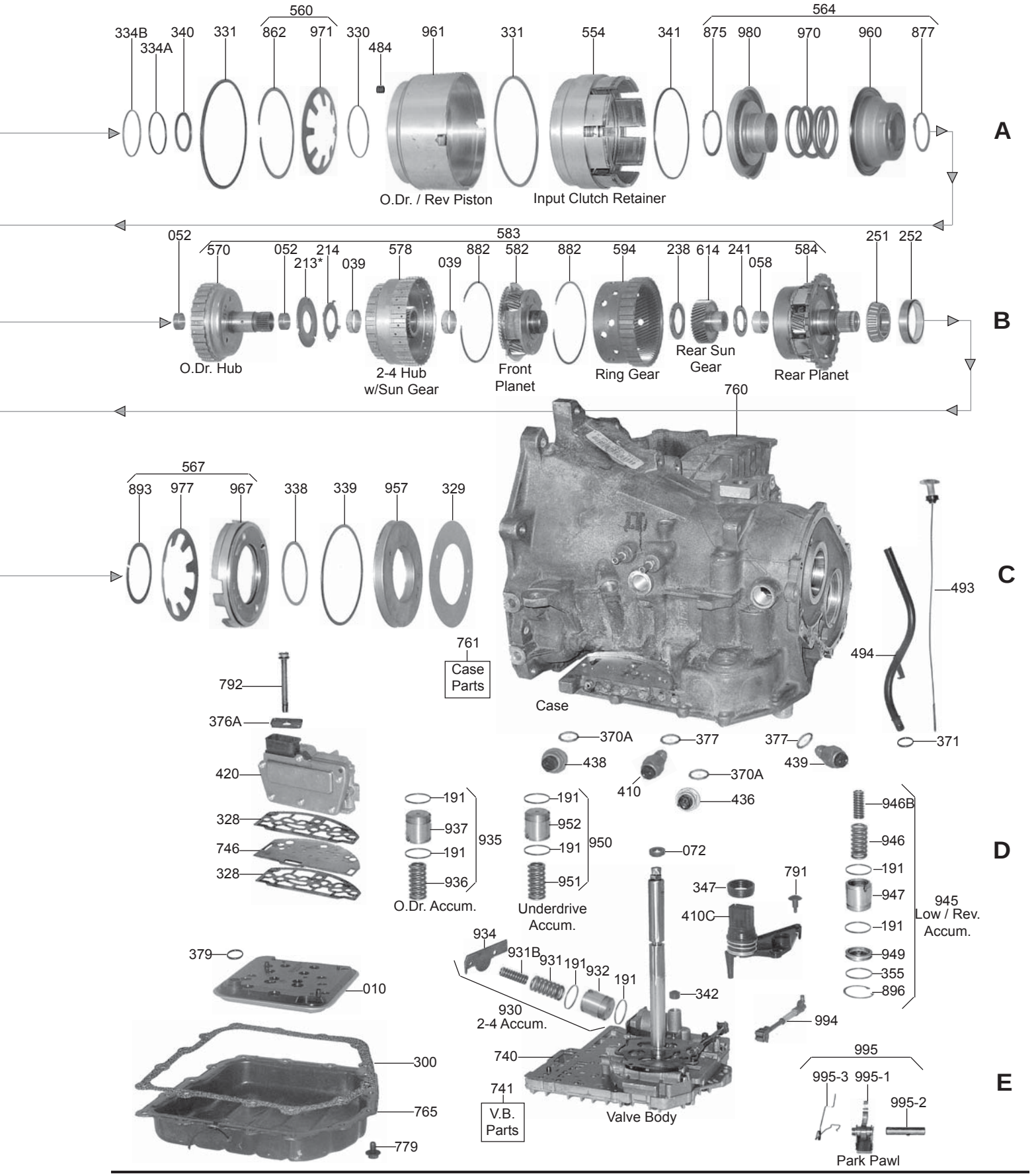

A604 (40TE/41TE-FWD/41AE-AWD)

ILL#	PART#	DESCRIPTION	QTY	REF #
		OVERHAUL KITS		
	K92900	Overhaul Kit, [A604] (With Pan & Cover Gaskets & Low / Reverse Retainer Plate) 1989-03 (*For Bonded Underdrive Piston Sell # 92912)	1	4882934
	K92900A	Overhaul Kit, [40TE / 41TE] (Without Pistons) (Without Pan & Cover Gaskets) 2004-Up	1	
	K92900AP	Overhaul Kit, [40TE] (With Pistons) (Without Pan & Cover Gaskets) 2004-Up	1	
	K92900BP	Overhaul Kit, [41TE / 41AE] (With Pistons) (Without Pan & Cover Gaskets) 2004-Up	1	
	K92900T	Overhaul Kit, [A604] (AWD Section Only*) 1989-Up	1	
		MASTER L/STEEL KIT		
	DK9200-S	Master L/Steel Kit, [A604] (With Pan & Cover Gaskets & Low / Reverse Retainer Plate) 1989-03 (*For Bonded Underdrive Piston Sell # 92912)	1	4883878
	DK9200A-S	Master L/Steel Kit, [40TE / 41TE] (Without Pistons) (Without Pan & Cover Gaskets) 2004-Up	1	
	K92900AP-S	Master L/Steel Kit, [40TE] (With Pistons) (Without Pan & Cover Gaskets) 2004-Up	1	
	DK9200BP-S	Master L/Steel Kit, [41TE / 41AE] (With Pistons) (Without Pan & Cover Gaskets) 2004-Up	1	
		MASTER W/STEEL KIT		
	DK9200	Master L/Steel Kit, [A604] (With Pan & Cover Gaskets & Low / Reverse Retainer Plate) 1989-03 (*For Bonded Underdrive Piston Sell # 92912)	1	
	DK9200A	Master L/Steel Kit, [40TE / 41TE] (Without Pistons) (Without Pan & Cover Gaskets) 2004-Up	1	
	DK9200AP	Master L/Steel Kit, [40TE] (With Pistons) (Without Pan & Cover Gaskets) 2004-Up	1	
	DK9200BP	Master L/Steel Kit, [41TE / 41AE] (With Pistons) (Without Pan & Cover Gaskets) 2004-Up	1	
		FILTER		
010	92710	Filter, [A604] 1989-Up	1	4864505
		FILTER KIT		
	FK92710	Filter Kit, [A604] 1989-Up	1	
		MISC. FILTERS		
015	92712	Screen, [A604] (Low/Reverse Piston Feed) (Orifice) (Black)	1	4446629
	92713	Screen, [A604] (Overdrive Piston) 1989-Up	1	4531903
016	92786	Screen, [A604] (Solenoid) 1989-E99 **(*Included In K92102 Solenoid Repair Kit)**	8	4431786
	92786A	Screen, [A604] (Solenoid) L1999-Up **(*Included In K92102A Solenoid Repair Kit)**	8	
018	32777	Screen, [A604] (Valve Body Regulator Feed)	1	3878313
		BUSHINGS		
	K92905	Bushing Kit, [A604] 1989-95	1	
	K92905B	Bushing Kit, [A604] 1996-00	1	
	K92905C	Bushing Kit, [A604] 2001-Up	1	
034	12502	Bushing, [A604] (Pump Body) (Babbit) 1989-Up	1	2466796
034	12502A	Bushing, [A604] (Pump Body) (Bronze) 1989-Up	1	
034	67001	Bushing, [A604] (Pump Body) (Bronze) (With Dimples) 1989-Up	1	
039	92005	Bushing, [A604] (2-4 Clutch Hub) 1989-95	2	
039	92005A	Bushing, [A604] (2-4 Clutch Hub) 1996-Up	2	
047	92002	Bushing, [A604] (Input Shaft) (Rear) (.595"OD) 1989-00	1	4412211
047	92002A	Bushing, [A604] (Input Shaft) (Rear) (.605"OD) 2001-Up	1	
050	92003	Bushing, [A604] (Input Clutch Hub) (Front) 1989-Up	1	4377170
050	92003-01K	Bushing, [A604] (Input Clutch Hub) (Front) (*Tighter Tolerances Than OEM) **(*Requires: 92003-TL)**	1	Sonnax

A604 (40TE/41TE-FWD/41AE-AWD)

	92003-TL	Bushing Tool, [A604] (*For 92003-01K)	1	Sonnax
052	92004	Bushing, [A604] (Overdrive Clutch Hub) (.283" Tall) 1989-95	2	4412219
052	92004A	Bushing, [A604] (Overdrive Clutch Hub) (.365" Tall) 1996-Up	2	4659617
052	92004SP	Bushing, [A604] (Overdrive Clutch Hub) (1-Piece) (*Fits .959"ID Hub) 1989-95 (5 Per Pkg)	1	Sonnax
052	92004L	Bushing, [A604] (Overdrive Clutch Hub) (1-Piece) (*Fits .937"ID Hub) 1996-Up (5 Per Pkg)	1	Sonnax
052	92004LOS	Bushing, [A604] (Overdrive Clutch Hub) (1-Piece) (*Fits .941"ID Hub) 1996-Up (5 Per Pkg)	1	Sonnax
058	92006	Bushing, [A604] (Rear Planet) 1989-Up	1	4412230
066	32060	Bushing, [A604] (Extension Housing) 1989-Up	1	4269961
		METAL CLAD SEALS		
070	12575	Seal, [A604] (Front) (With Flange) (.3307") (*Except 2008 -Up Dodge Avenger & Chrysler Sebring)	1	4269057
070	A12575	Seal, [A604] (Front) (Without Flange) (*Expect 2008-Up Dodge Avenger & Chrysler Sevring)	1	
070	107151	Seal, [41TE / 41AE] (Front) (Dodge Avenger & Chrysler Sebring) (.2441"Tall) 2008-Up	1	
072	92574	Seal, [A604] (Linkage) (Valve Body Stem Seal) (Rubber)	1	4412836
074	32367	Seal, [A604] (Axle) (Both Sides) 1989-Up (*Can Use 32366)	2	4412522AB
074	92156	Seal, [A604] (Axle) (All Wheel Drive Only*)	2	
		FRICTION CLUTCH		
100	A92137	Friction, [A604] (Overdrive Clutch) (.086") (1st Design) 1989 (*Use to Adjust Clearance)	3	4377137
100	A92138	Friction, [A604] (Underdrive & Reverse Clutch) (.071") (Tan) 1989-Up	6	4505629
100	B92138	Friction, [A604] (Overdrive / Underdrive / Reverse Clutch) (.071") (2nd Design) (Hi-Energy) 1990-Up	10	4531678
100	K92138X	Friction & Steel Kit, [A604] (Overdrive Clutch) (.073") (Hi-Energy) 1990-Up	1	Alto
104	B92147	Friction, [A604] (2-4 Clutch) (.086") (Hi-Energy) 1989-Up	4	4377125
104	A92147	Friction, [A604] (2-4 Clutch) (.086") (Tan) 1989-Up	4	4567212
114	B92134	Friction, [A604] (Low / Reverse Clutch) (.072") (Hi-Energy) 1989-Up	5	4567573
114	A92134	Friction, [A604] (Low / Reverse Clutch) (.072") (Tan) 1989-Up	5	4377134
	K92100	Friction Module, [A604] (With Hi-Energy Frictions) 1990-Up	1	
		STEEL CLUTCH		
120	92183	Steel, [A604] (Overdrive / Underdrive / Reverse Clutch) (.068") 1990-Up	5-7	4659053
120	92190	Steel, [A604] (Overdrive Clutch) (.098") 1989	2	4377190
124	92135	Steel, [A604] (2-4 Clutch) (.101") 1989-Up	4	4659054
134	92162	Steel, [A604] (Low / Reverse Clutch) (.067") 1989-Up	5	4659055
	K92110	Steel Module, [A604]	1	
		CLUTCH PRESSURE PLATES		
140	92191	Pressure Plate, [A604] (Overdrive Clutch) (8-Lug) 1989-E90	1	4377191
140	92191A	Pressure Plate, [A604] (Overdrive Clutch) (4-Lug) L1990-Up	1	4531556
142	K92186	Pressure Plate Kit, [A604] (Underdrive Clutch) (.215") 1990-96 (*With # 92600C Snap Ring)	1	4723684
142	K92186A	Pressure Plate Kit, [A604] (Underdrive Clutch) (.235") 1990-96 (*With # 92600C Snap Ring)	1	5017514AA
142	K92186B	Pressure Plate Kit, [A604] (Underdrive Clutch) (.255") 1990-Up (*With # 92600C Snap Ring)	1	5017513AA
142	K92186C	Pressure Plate Kit, [A604] (Underdrive Clutch) (.275") 1990-Up (*With # 92600C Snap Ring)	1	4723681
142	K61187	Pressure Plate Kit, [A604] (.228") (*With #92600D Snap Ring) 1997-Up	1	
142	K61187A	Pressure Plate Kit, [A604] (.248") (*With #92600D Snap Ring) 1997-Up	1	
142	K61187B	Pressure Plate Kit, [A604] (.268") (*With #92600D Snap Ring) 1997-Up	1	
150	92194	Pressure Plate, [A604] (Reverse Clutch) (.335" Thick) (at the Edge) 1989-Up	1	4531905
150	92194B	Pressure Plate, [A604] (Reverse Clutch) (.186" Thick) 1997-Up	1	4531925
154	92267	Pressure Plate, [A604] (Low/Reverse Clutch) (.210") 1989-Up	1	
154	92266	Pressure Plate, [A604] (Low/Reverse Clutch) (.220") 1989-Up	1	

A604 (40TE/41TE-FWD/41AE-AWD)

154	61188A	Pressure Plate, [A604] (Low / Reverse Clutch) (.230") 1989-Up	1	4897452AA
154	92268	Pressure Plate, [A604] (Low / Reverse Clutch) (.240") 1989-Up	1	4897453AA
154	61188B	Pressure Plate, [A604] (Low / Reverse Clutch) (.250") 1989-Up	1	4897454AA
154	61188C	Pressure Plate, [A604] (Low / Reverse Clutch) (.270") 1989-Up	1	4897456AA
154	92265	Pressure Plate, [A604] (Low / Reverse Clutch) (.206") 1989-Up	1	4567894
		VALVE BODY KITS		
	K92908	Shift Kit, [A604] 1989-Up	1	Transgo
		OIL SEALING RINGS		
	K92903	Ring Kit, [A604] 1989-Up	1	
177	92301	Ring, [A604] (Input Shaft) (Teflon)	3	4446543
181	12600A	Ring, [A604] (Stator Support) (2.062"OD) (Metal) (Seal Plated) 1989-Up	4	
181	34713T	Ring, [A604] (Stator Support) (*Updated) (2.062"OD) (Teflon) 1989-Up	4	8675729
191	92302	Ring, [A604] (Accumulator) (Non Rotating) (1.013"OD) (Graphite) 1989-Up	8	4446544
191	92302T	Ring, [A604] (Accumulator) (1.013"OD) (Teflon) 1989-Up	8	
		WASHERS & BEARINGS		
	K92600	Washer Kit, [A604] 1989-Up	1	
	K92906	Bearing Kit, [A604] 1988-Up (Torrington)	1	
207	92629	Washer, [A604] (Output Gear) (Under Bolt)	1	6501832
208	92629A	Washer, [A604] (Driven Transfer Gear) (Under Nut)	1	6501833
211	92633	Bearing, [A604] (Stator to Input Drum) (1.713"OD) 1989-93 (*Also Rear Sun Gear to Rear Planet)	1	4412209
213	92622	Race, [A604] (Overdrive Hub to 2-4 Hub) (.039") (3-Slot)	1	4431662
213	92622H	Race, [A604] (Overdrive Hub to 2.4 Hub) (.048") (3-Slot)	1	4431663
213	92622A	Race, [A604] (Overdrive Hub to 2.4 Hub) (.057") (3-Slot)	1	4431664
213	92622J	Race, [A604] (Overdrive Hub to 2.4 Hub) (.066") (3-Slot)	1	4431665
213	92622B	Race, [A604] (Overdrive Hub to 2.4 Hub) (.074") (3-Slot)	1	4431666
213	92622K	Race, [A604] (Overdrive Hub to 2.4 Hub) (.083") (3-Slot)	1	4431667
213	92622C	Race, [A604] (Overdrive Hub to 2.4 Hub) (.091") (3-Slot)	1	4431668
213	92622D	Race, [A604] (Overdrive Hub to 2.4 Hub) (.100") (3-Slot)	1	4431669
213	92622L	Race, [A604] (Overdrive Hub to 2.4 Hub) (.109") (3-Slot)	1	4446670
213	92622E	Race, [A604] (Overdrive Hub to 2.4 Hub) (.117") (3-Slot)	1	4446671
213	92622M	Race, [A604] (Overdrive Hub to 2.4 Hub) (.126") (3-Slot)	1	4446672
213	92622F	Race, [A604] (Overdrive Hub to 2.4 Hub) (.135") (3-Slot)	1	4446601
214	92627	Washer, [A604] (Overdrive Hub to 2-4 Hub) (4-Tab) (1.263"ID)	1	4412216AB
220	92625	Washer, [A604] (Underdrive Hub to Overdrive Hub) (5-Tab) (.050" Thick) (1.260"ID)	1	4471855
221	92621	Race, [A604] (Underdrive Hub to Overdrive Hub) (3-Tab) (.031" Thick) (1.2663"ID)	1	4431973
232	92635	Bearing, [A604] (Input Drum to Underdrive Hub) (1.790"OD) 1994-Up (*Also Rear Sun Gear to Rear Planet)	1	4567262
238	92638	Bearing, [A604] (Front Planet to Rear Sun Gear)	1	4412209
241	93633	Bearing, [A604] (Rear Sun Gear to Rear Planet) 1989-93	1	4412209
241	92635	Bearing, [A604] (Rear Sun Gear to Rear Planet) 1994-Up	1	4467262
251	32977	Bearing, [A604] (Presses on Rear Planet) 1989-Up	1	JL69349
251	K32978	Bearing & Race Kit, [A604] (Presses on Rear Planet) 1989-Up	1	SET 11
252	32978	Cup Race, [A604] (Rear Planet Bearing to Case) 1989-Up	1	JL69310
269	92629B	Shim, [A604] (Transfer Gear) (.144") (Output)	1	6501832
273	32978	Cup Race, [A604] (Rear Planet & Differential)	1-2	JL69310
273	92829	Cup Race, [A604] (Pinion) (*Fits 20-Roller Bearing)	1	13632X
273	32978A	Cup Race, [A604] (Differential) (*Fits 19-Roller Bearing) 1996-Up (*For Large ID Bearing)	1	NP714580
274	32977	Bearing, [A604] (Presses on Rear Planet & Differential) (22-Roller Bearing) 1989-Up	1-2	JL69349

A604 (40TE/41TE-FWD/41AE-AWD)

274	92965	Bearing, [A604] (Differential/Pinion) (20-Rollers) (1.500”ID)	1	13687
274	32977A	Bearing, [A604] (Differential) (19-Rollers) (1.625”ID) 1996-Up (*For Large ID Bearing)	1	NP889967
274	K32978	Bearing & Race Kit, [A604] (Rear Planet & Differential) (22-Rollers)	1	SET 11
274	K92965	Bearing & Race Kit, [A604] (Pinion) (20-Rollers) (1.500”ID)	1	4856911
	32125LRB	Support Bearing, [A604] (Axle Stabilizer)	1	Teckpak
276	92965-Z5	Shim Kit, [A604] (.005”) (10-Piece) (*Use With OE Shims)	1	Sonnax
276	92629B	Shim, [A604] (Transfer Gear) (.144”) (Output & Pinion)	1	6501832
276	92965-30	Shim Kit, [A604] (.030”) (10-Piece) (*Use With OE Shims)	1	Sonnax
276	92629C	Shim, [A604] (Transfer Gear) (.148”) (Output & Pinion)	1	
227	92965-37	Shim Kit, [A604] (.037”) (10-Piece) (*Use With OE Shims)	1	Sonnax
276	92629D	Shim, [A604] (Transfer Gear) (.152”) (Output & Pinion)	1	
276	92965-45	Shim Kit, [A604] (.045”) (10-Piece) (*Use With OE Shims)	1	Sonnax
276	92629E	Shim, [A604] (Transfer Gear) (.158”) (Output & Pinion)	1	
278	92769	Cup Race, [A604] (Output Gear Bearing to Case) 1989-Up	1	LM300811
279	92964	Cone Bearing, [A604] (Presses on Output Gear)	1	LM300848
280	92773	Cup Race, [A604] (Driven Transfer Gear to Case)	1	LM501310
281	92968	Bearing, [A604] (Driven Transfer Gear) (20-Rollers) (1.625”ID)	1	LM501349
281	K92968	Bearing & Race Kit, [A604] (Driven Transfer Gear to Case)	1	
290	39539-Z5	Shim Kit, [A604] (*For 2.48” Thick Differential Bearing Race) (.005”) (10 Per Kit)	1	Sonnax
290	39540-Z5	Shim Kit, [A604] (*For 2.88” Thick Differential Bearing Race) (.005”) (10 Per Kit)	1	Sonnax
		GASKETS & RUBBER COMPONENTS		
300	92500	Gasket, [A604] (Bottom Pan) 1989-Up	1	4431997
300	92500D	Gasket, [A604] (Bottom Pan) (Fiber) (Duraprene) 1989-Up	1	
303	92501	Gasket, [A604] (Differential Cover) 1989-Up	1	4377169
304	92502	Gasket, [A604] (Transfer Gear Cover) 1989-Up	1	4377165
309	32172	Gasket / Washer, [A604] (Pump Bolt) 1989-Up	5	
310	92544	Gasket, [A604] (Pump) 1989-Up	1	4412844
311	32102	O-Ring, [A604] (Pump) 1989-Up	1	4659945
328	92598	Gasket, [A604] (Solenoid Pack) (Takes 2) 1989-98	2	4431798
328	92598A	Gasket, [A604] (Solenoid Pack) 1999-Up	1	4659982
329	92106	Gasket, [A604] (Low / Reverse Piston Retainer) 1989-Up	1	4431649
329	92106-01K	Gasket / Seal Kit, [A604] (Low / Reverse Piston Retainer) (Steel Gasket) (Shim With Slot & Rubber Grommet)	1	Sonnax
330	92158	O-Ring, [A604] (Overdrive & Reverse Clutch) (Inner) 1989-Up	1	5033158
331	92143	Lip Seal, [A604] (Overdrive & Reverse Clutch) (Outer) 1989-Up	2	4412875
332	92142	D-Ring, [A604] (2nd - 4th Clutch) (Inner)	1	4659376
333	92141	D-Ring, [A604] (2nd - 4th Clutch) (Outer)	1	4659374
334A	92170	O-Ring, [A604] (Input Clutch Rear) (.070”) (Green) (Inner) (Rear) 1989-E90	1	6502270
334A	92169	O-Ring, [A604] (Input Clutch Rear) (.103”) (Red) (Inner) (Rear) 1990-Up	1	6502269
334B	92172	O-Ring, [A604] (Input Clutch Front) (.070”) (Orange) (Inner) (Front) 1989-E90	1	6502272
334B	92171	O-Ring, [A604] (Input Clutch Front) (.103”) (Blue) (Inner) (Front) L1990-Up	1	6502271
338	92145	D-Ring, [A604] (Low / Reverse Clutch) (Inner) 1989-Up	1	4659856
339	92140	D-Ring, [A604] (Low / Reverse Clutch) (Outer) 1989-Up	1	4659855
340	92111	Lip Seal, [A604] (Underdrive Clutch) (Inner) 1989-Up	1	4659391
341	92109	Lip Seal, [A604] (Underdrive Clutch) (Outer) 1989	1	4377173
341	92110	Lip Seal, [A604] (Underdrive Clutch) (Outer) 1990-Up	1	4531408
342	92144	Seal, [A604] (2nd - 4th Feed) (Valve Body to Case)	1	4412291
347	92521	Grommet, [A604] (PRNDL Switch to Case) (Thin, 1.350”OD For Case Connector Hole) (Rubber) 1996-98	1	

A604 (40TE/41TE-FWD/41AE-AWD)

347	92521A	Grommet, [A604] (PRNDL Switch to Case) (Thick, 1.420"OD For Case Connector Hole) (Rubber) 1999-Up	1	
348	32168	O-Ring, [A604] (Extension Housing) 1989-Up	1	6500111
355	92303	O-Ring, [A604] (Low / Reverse Accumulator Cover)	1	6501549
370A	92107	O-Ring, [A604] (Input Speed Sensor) (Small)	1	6501700
370A	92108	O-Ring, [A604] (Output Speed Sensor) (Large)	1	6501701
371	3291	O-Ring, [A604] (Filler Tube)	1	6264902
376	92522	Seal, [A604] (Solenoid Conn to External Wire Harness) 1989-Up (Flat) (*Fits Over Connector Prongs)	1	
376	92836-02	Diaphragm, [A604] (Switch Seal) (In Solenoid Pack) (9 Per Pack)	1	Sonnax
376	92836-03K	Diaphragm Kit, [A604] (Switch Seal Kit) (In Solenoid Pack) (3-Diaphragms & 3-Brass Contacts)	1	Sonnax
378	92159	O-Ring, [A604] (Cooler By-Pass Valve)	1	
379	92167	O-Ring, [A604] (Filter)	1	4412844
381	92168	O-Ring, [A604] (Transfer Shaft Bearing Retainer)	1	6501768
		TECHNICAL MANUALS		
	TMA604	Technical Manual, [A604]	1	ATSG
	TMA604S	Technical Manual, [A604] (Handbook) 4/1989 - 1991 (Updates).	1	ATSG
		ELECTRICAL COMPONENTS		
410	K2627C	Switch, [A604] (Neutral Safety) (External) 1989	1	3747361
410	92927	Switch, [A604] (Neutral Safety) (External) 1990-95	1	4671017
410	92928	Switch, [A604] (Neutral Safety & PRNDL) (Internal) 9/1995 - 1998 (Round Pins)	1	4659559-AC
410	92928A	Switch, [A604] (Neutral Safety & PRNDL) (Internal) 10/1998-Up (Flat Blades)	1	4659676AB
	92863	Seal, [A604] (Manual Pressure (PRNDL) Switch) (*Allows Early Switch to Fit Late Case) 1993-01	1	5013863AA
420	92836A	Solenoid Pack, [A604] (Shift Control) 1999-Up (*Retros to 1989 Fits All)	1	5015646AC
	92955	Sensor, [41TE] (Line Pressure Transducer) 2007-Up	1	
	92958	Solenoid, [41TE] (Variable Line Pressure Control) 2007-Up	1	
	K92102	Repair Kit, [A604] (Solenoid Pack) 1989-98	1	
	K92102A	Repair Kit, [A604] (Solenoid Pack) 1999-Up	1	
436	92887	Speed Sensor, [A604] (Output) (.928"OD Threads)	1	4800879
438	92888	Speed Sensor, [A604] (Input) (.855"OD Threads)	1	4800878
439	92869	Sensor, [A604] (Trans Range) (PRNDL) (External) 1989	1	4439059
439	92869A	Sensor, [A604] (Trans Range) (PRNDL) (External) 1990-95	1	4671019
	92938	Repair Kit, [41TES] (Wire Harness) (Variable Line Pressure Solenoid)	1	
	92936	Repair Kit, [A604] (Wire Harness) (PRNDL / Neutral Switch) 1990-95	1	4638996
	92937	Repair Kit, [A604] (Wire Harness) (Neutral Safety / PRNDL) 10/1998-Up	1	
	92933	Repair Kit, [A604] (Wire Harness) (Input / Output Speed Sensor Connector) (With Heat Shrinks)	1	4419478
	92932	Repair Kit, [A604] (Wire Harness) (Solenoid Connector) 1989-Up	1	4419479
		MISC. COMPONENTS		
484	92713	Screened Orifice, [A604] (In Overdrive / Reverse Piston)	1	4531903
494	92834-07	Shield, [A604] (Dipstick Tube) (Cases With Filler Tubes That Extend Into The Case 1.25" Only*)	1	Sonnax
		HARD PARTS		
500	92200	Pump, [A604] (3-Ring Stator) 1989	1	
500	92200A	Pump, [A604] (4-Ring Stator) 1990-Up	1	4567869AB
510	92201	Pump Body W/Gears, [A604] (25 Teeth Inner Gear) (.708" Thick) 1989-Up (*Can Use 92201A)	1	

A604 (40TE/41TE-FWD/41AE-AWD)

510	92201A	Pump Body W/Gears, [A604] (12Teeth Inner Gear) (.495" Thick) 2000-Up (*Can Use 92201)	1	
520	92202	Stator, [A604] (3-Ring) 1989	1	
520	92202A	Stator, [A604 / 42RLE] (Pump Cover) (4-Ring) 1990-Up (Cast # 4377161 or 4567666)	1	
520	92202B	Stator, [A604 / 42RLE] (Pump Cover) (4-Ring) 2000-Up (Cast # 4659715)	1	
		PUMP COMPONENTS		
530	K92201	Pump Gears, [A604] (25 Teeth Inner Gear) (.708" Thick) 1989-Up	1	
530	K92201A	Pump Gears, [A604] (12 Teeth Inner Gear) (.495" Thick) 2000-Up	1	
540	92890	By-Pass Valve, [A604] (In Case Under Pump)	1	4539880
540	92836-01K	Plug, [A604] (By-Pass Valve) (2 Per Kit)	1	Sonnax
540	92890A	By-Pass Valve, [A604] (Splices Into Cooler Line)	1	5252836
		HARD PARTS (Continued)		
554	92909	Drum, [A604] (Input Clutch Retainer) (With Bevel) (3-Plate) 1989	1	
554	92923	Drum, [A604] (Input Clutch Retainer) (Without Bevel) 1990-96	1	4505623
554	92923A	Drum, [A604] (Input Clutch Retainer) 1997-Up	1	4659935
570	92807	Hub, [A604] (Overdrive & Reverse) (1.140"OD Shaft) 1989-95	1	
570	92807A	Hub, [A604] (Overdrive & Reverse) (1.160"OD Shaft) 1996-Up	1	4659993
571	92806	Hub, [A604] (Underdrive Clutch) (With Solid Shaft) 1989-Up	1	4431615
574	92248	Hub, [A604] (Input Clutch) (*For 3-Ring Stator) 1989	1	
574	92248A	Hub, [A604] (Input Clutch) (*For 4-Ring Stator) 1990-Up	1	
578	92922	Hub & Sun Gear, [A604] (2nd-4th Clutch) (1.140"OD Bushing) 1989-95	1	4431622
578	92922A	Hub & Sun Gear, [A604] (2nd-4th Clutch) (1.160"ID Bushing) 1996-Up	1	4659618AB
582	92747	Planet, [A604] (Front) 1989-95	1	4567539
582	92747A	Planet, [A604] (Front) (With Heat Treated Splines) 1996-Up (*Will Retro to 1989)	1	4567539AB
583	K92749A	Planet Kit, [A604] (Contains: Front Planet, Rear Planet, 2-4 Hub, Sun Gear, Ring Gear) (Rear Planet is 4 Gear and 1" From Step to the end of Shaft) 1989-E91	1	
583	K92749	Planet Kit, [A604] (Front Planet, Rear Planet, 2-4 Hub, OD Hub, Sun Gear, Ring Gear) (Rear Planet is 4 Gear and 1-1/8" From Step to the end of Shaft) L1991-Up (*Can Use K92749L)	1	
583	K92749L	Planet Kit, [A604] (Front Planet, Rear Planet, 2-4 Hub, OD Hub, Sun Gear, Ring Gear) (Rear Planet is 5 Gear and 1-1/8" From Step to end of Shaft) 1996-Up (*Can Use K92749)	1	
584	92730	Planet, [A604] (Rear) (4 Gear) (1" From Step to End of Shaft) 1989-E91	1	47627004
584	K92730	Planet Kit, [A604] (Rear) (1.125" Spline, 4-Gear Planet, Sun Gear, Rear Planet, Bearing, Sun Gear Hub, and Rear Ring Gear) 1989-Up	1	4883762AC
584	92730A	Planet, [A604] (Rear) (4 Gear) (1-1/8" From Step to End of Shaft) L1991-Up	1	4897329
584	92730B	Planet, [A604] (Rear) (5 Gear) (1-1/8" From Step to End of Shaft) (*Can Use 92730A) 96-Up	1	5014200AA
594	92748	Ring Gear, [A604] (Rear Planet) 1989-Up	1	4799794
614	92750	Sun Gear, [A604] (Rear Planet) 1989-Up	1	4377080
630	92650	Retainer, [A604] (2nd-4th Clutch Piston) 1989-03	1	
630	K92650	Retainer Kit, [A604] (2nd-4th Clutch Piston) (Contains: Aluminum Piston & Retainer) 1989-03	1	
630	K92650A	Retainer Kit, [A604] (2nd-4th Clutch Piston) (Contains: Bonded Piston & Retainer) 2004-Up	1	5102880AA
670	92847	Shaft, [A604] (Input) (22-Splines)	1	
670	92823	Shaft, [A604] (Input) (24-Splines)	1	
698	32833	Baffle, [A604] (Pinion Bearing) (2.760"OD) (*Early's are Long & Late's are Short) (*All Retro Fit)	1	4471869
698A	32834	Baffle, [A604] (Differential Bearing) (Under Axle Seal In Extension Housing) (2.210"OD)	1	4567494
698B	32177	Baffle, [A604] (Differential Bearing) (Under Axle Seal In Differential Retainer) (2.605"OD)	1	4659290
698B	32177A	Baffle, [A604] (Differential Bearing) (Under Axle Seal in Differential Retainer) (*For Large ID Bearing)	1	
710	92771	Gear, [A604] (Output) (59 Teeth)	1	

A604 (40TE/41TE-FWD/41AE-AWD)

710	92771A	Gear, [A604] (Output) (55 Teeth)	1	
710	92771B	Gear, [A604] (Output) (47 Teeth)	1	
710	92771C	Gear, [A604] (Output) (53 Teeth)	1	
710	92771D	Gear, [A604] (Output) (49 Teeth)	1	
710	92771E	Gear, [A604] (Output) (46 Teeth)	1	
710	92771F	Gear, [A604] (Output) (50 Teeth)	1	
712	92770	Gear, [A604] (Transfer) (54 Teeth)	1	
712	92770A	Gear, [A604] (Transfer) (58 Teeth)	1	
712	92770C	Gear, [A604] (Transfer) (50 Teeth)	1	
712	92770D	Gear, [A604] (Transfer) (46 Teeth)	1	
712	92770B	Gear, [A604] (Transfer) (49 Teeth)	1	
713	92120	Retainer, [A604] (Transfer Gear Cup Race) (Steel Housing)	1	4412273
716	92830	Differential Housing, [A604] (22-Roller Bearings on Both Sides) (*Axle Does Not Use a Snap Ring)	1	
716	92830B	Differential Housing, [A604] (22-Roller Bearing Housing Side) (With 19-Roller Bearing Ring Gear Side) (Large ID Bearing) (Roll Pin Holds .733”OD Cross Pin In) (*Axle Uses Snap Ring to Hold to Differential) (*Open Housing Can See Spider Gears)	1	
716	92830BA	Differential Housing, [A604] (22-Roller Bearing Housing Side) (With 19-Roller Bearing Ring Gear Side) (Large ID Bearing) (Roll Pin Holds .733”OD Cross Pin In) (*Axle Uses Snap Ring to Hold to Differential) (*Closed Housing Can Not See Spider Gears)	1	
716	92830BB	Differential Housing, [A604] (22-Roller Bearing Housing Side) (With 19-Roller Bearing Ring Gear Side) (Large ID Bearing) (2-Brackets Hold .665”OD Cross Pin In) (*Axle Uses a Snap Ring to Hold to Differential)	1	
716	92830BC	Differential Housing, [A604] (22-Roller Bearing Housing Side) (With 19-Roller Bearing Ring Gear Side) (Large ID Bearing) (Roll Pin Holds.665”OD Cross Pin In) (*Axle Does Not Use a Snap Ring to Hold to Differential)	1	
716	92830	Differential Housing, [A604] (22-Roller Bearing on Both Sides) (*Axle Uses a Snap Ring to Hold to Differential)	1	
716	92830A	Differential Housing, [A604] (With 25-Roller Bearing Housing Side) (With 22-Roller Bearing on Ring Gear Side) (*Axle Uses a Snap Ring to Hold to Differential)	1	
716	92830AA	Differential Housing, [A604] (AWD) (With 25-Roller Bearing Housing Side) (With 19-Roller Bearing on Ring Gear Side) (Large ID Bearing)	1	
717	K32990A	Gear Kit, [A604] (12-Bolt) (Side & Spider Gears With Washers & Pins)	1	
717	K039	Retainer, [A604] (Differential Side Gear Cross Pin) (.661”OD Pin) (Hold Cross Pin In Housing)	1	Superior
717	92853	Retainer, [A604] (Differential Side Gear)	2	4800058AA
717	K049	Retainer, [A604] (Differential Side Gear Cross Pin) (.735”OD Pin) (Holds Cross Pin In Housing)	1	Superior
717	92851	Retaining Pin, [A604] (Holds Differential Side Gear Cross Pin In Housing)	1	
717	92851R	Retainer, [A604] (Differential Side Gear Cross Pin) (Holds Cross Pin In Housing) 2000-Up	1	
720	92831A	Ring Gear, [A604] (Differential) (59 Teeth)	1	
720	92831	Ring Gear, [A604] (Differential) (60 Teeth) (1-Groove)	1	
720	92831B	Ring Gear, [A604] (Differential) (60 Teeth) (2-Grooves)	1	
720	92831C	Ring Gear, [A604] (Differential) (56 Teeth)	1	
725	32176B	Retainer, [A604] (Differential) (2WD) (Cast Iron) (6-Bolt) (2.477” Tall)	1	4659736
725	32176C	Retainer, [A604] (Differential) (Cast Iron) (6-Bolt) (2.676” Tall) (*For Large ID Bearing) 96-Up	1	
725	32176D	Retainer, [A604] (Differential) (All Wheel Drive) (Steel) (6-Bolt)	1	
727	92843	Retainer, [A604] (Drive Transfer Gear Nut) (*Keeps Nut From Backing Off) 1995-Up	2	
727	92844	Plate, [A604] (Drive Transfer Gear Nut Retainer) 1995-Up	2	
730	92828A	Pinion, [A604] (Transfer Shaft) (17 Teeth) (Tapered Thin Shaft)	1	4531978

A604 (40TE/41TE-FWD/41AE-AWD)

730	92828C	Pinion, [A604] (Transfer Shaft) (17 Teeth) (Thick Shaft)	1	
730	92828	Pinion, [A604] (Transfer Shaft) (16 Teeth) (Tapered Thin Shaft)	1	4531976
730	92828B	Pinion, [A604] (Transfer Shaft) (16 Teeth) (Thick Shaft)	1	
730	92828D	Pinion, [A604] (Transfer Shaft) (15 Teeth)	1	
		VALVE BODIES (REBUILT)		
740	CR-2743	Valve Body, [A604] (Casting # 4446639) (4-Check Balls) 1989-91	1	
740	CR-2744	Valve Body, [A604] (Casting # 4511644) (4-Check Balls) 1992-94	1	
740	CR-2745	Valve Body, [A604] (3-Check Balls) 1995-Up	1	
740	CR-2745B	Valve Body, [A604] (VLP Style) 2006-Up	1	
		VALVE BODIES		
740	92835	Valve Body, [A604] (#33 on Plate) 1989-90	1	
740	92835A	Valve Body, [A604] (#46 on Plate) 1991-92	1	
740	92835B	Valve Body, [A604] (#96 on Plate) 1993-Up	1	
740	92835BA	Valve Body, [A604] (#66 on Plate) (*No PRNDL Switch) 1993-94	1	
740	92835BB	Valve Body, [A604] (*Uses PRNDL Switch) (With 9-Round Pin Connector) (PRNDL Switch is the Black Switch on Valve Body) (No Coil Spring Under Case Connector) 1995-98	1	
740	92835BC	Valve Body, [A604] (*Uses PRNDL Switch) (With 9-Flat Blade Connector) (PRNDL Switch is the Black Switch on Valve Body) (No Coil Spring Under Case Connector) 1999-Up	1	
740	92835BD	Valve Body, [A604] (VLP Style) 2006-Up	1	
		VALVE BODY COMPONENTS		
741	92835-02K	Plugs, [A604] (Switch Valve) (Oversized) **(*No Machining)** (2 Per Pkg)	1	Sonnax
741	92835-18K	Plugs, [A604] (Switch Valve) (Oversized) (2-Plugs, 1-End Plug, 1-O-Ring) **(*Requires: 92835-RM)**	1	Sonnax
	92835-RM	Reamer, [A604] **(*For Oversized Plugs # 92835-18K)**	1	Sonnax
741	92835-21	Valve, [A604] (Solenoid Switch) (Oversize) **(*Requires Tool F-92835-TL Reamer)**	1	Sonnax
	F-92835-TL	Reamer, (*For 92835-21)	1	Sonnax
741	92835-07	Sleeve, [A604] (Pressure Regulator Reducing)	1	Sonnax
741	92835-03K	Valve Kit, [A604] (Converter Regulator) (1-Switch Valve & 1-Bias Valve)	1	Sonnax
741	SC41TE	Sure Cure Kit, [A604]	1	Sonnax
741	92099	Bushing, [A604] (Boost Valve)	1	Transgo
		HARD PARTS (Continued)		
758	92839	Cover, [A604] (Differential)	1	4659520
759	92838A	Rear Cover, [A604] (Transfer Gear) (2-Dimples) L1991-Up (*Retros to 1989)	1	4659636
760	92834BA	Case, [A604] (3.3 / 3.8 Liter) (Without By-Pass Valve Under Pump) 1989-90	1	
760	92834B	Case, [A604] (3.3 / 3.8 Liter) (With By-Pass Valve Under Pump) 1991-95	1	
760	92834BX	Case, [A604] (3.3 / 3.8 Liter) (No Black Switch On Valve Body) 1995-96 (*Early Case Converted to Late)	1	
760	92834CE	Case, [A604] (3.3 / 3.8 Liter) (1.350”ID Case Connector Hole) (With Black Switch on Valve Body) 1996-98	1	
760	92834CF	Case, [A604] (3.3 / 3.8 Liter) (1.420”ID Case Connector Hole) (With Black Switch on Valve Body) 1999-Up	1	4883524AA
760	92834D	Case, [A604] (3.3 / 3.8 Liter) (1.420”ID Case Connector Hole) (With Black Switch on Valve Body) (*No Mounting Holes at Rear Left) 2001-Up	1	
760	92834DA	Case, [A604] (3.3 / 3.8 Liter) (1.420”ID Case Connector Hole) (With Black Switch on Valve Body) (*Has 2-Mounting Holes at Rear Left) 2001-Up	1	
760	92834DB	Case, [A604] (2.7 / 3.3 / 3.8 Liter) (1.420”ID Case Connector Hole) (Has 1.130”ID Solenoid Connector Hole) (2-Internal Solenoids) (*Has 2-Mounting Holes at Rear Left of Case on the Pan Rail) 2006-Up	1	
760	92834	Case, [A604] (2.5 / 3.0 Liter) (Without By-Pass Valve Under Pump) 1991-95	1	

A604 (40TE/41TE-FWD/41AE-AWD)

760	92834A	Case, [A604] (2.5 / 3.0 Liter) (With By-Pass Valve Under Pump) 1991-95	1	
760	92834CC	Case, [A604] (2.5 / 3.0 Liter) (1.350"ID Case Connector Hole) (With Black Switch on Valve Body) 1995-98	1	
760	92834CD	Case, [A604] (2.5 / 3.0 Liter) (1.420"ID Case Connector Hole) (With Black Switch on Valve Body) 1998-Up	1	
760	92834CA	Case, [A604] (2.0 / 2.4 Liter) (1.350"ID Case Connector Hole) (With Black Switch on Valve Body) 1995-98	1	
760	92834CB	Case, [A604] (2.0 / 2.4 Liter) (1.420"ID Case Connector Hole) (With Black Switch on Valve Body) 1999-Up	1	
		CASE COMPONENTS		
761	K92761CD	Case Kit, [A604] (*Converts 1991-94 (3.3 / 3.8 Liter) to 1996-98) **(*Case Must Be Machined For Tapered Case Connector Sleeve)** (Contains: Bracket, Connector Sleeve, 2-Neutral Plugs & Bolts)	1	
761	K92761ACD	Case Kit, [A604] (*Converts 1991-94 (3.3 / 3.8 Liter) to 1999-Up) **(*Case Must Be Machined For Tapered Case Connector Sleeve)** (Contains: Bracket, Connector Sleeve, 2-Neutral Plugs & Bolts)	1	
		HARD PARTS (Continued)		
765	92837	Pan, [A604] (Bottom)	1	4431997
770	92833	Extension Housing, [A604] (With Speed-O Hole) 1989-92	1	
770	92833A	Extension Housing, [A604] (No Speed-O Hole) 1993-Up	1	
770	92833B	Extension Housing, [A604] (1-3/4" Overall Height) (4-Bolt) (Cast # 4567511)	1	4567413
774	32958A	Housing, [A604] (Speed-O Housing) (VSS) (3-Prong)	1	
779	96704-01	Pan Bolt, [A604] (Metric)	AR	Sonnax
795	92948	Bolt W/Washer, [A604] (Holds on Output Gear) (1/4" Thick) 1989-E91	1	
795	92948A	Bolt W/Washer, [A604] (Holds on Output Gear) (5/16" Thick) L1991-Up	1	6503548
796	92841	Nut W/Washer, [A604] (Holds on Transfer Gear) (Gray) 1989-E91	1	6501711
796	92841A	Nut W/Washer, [A604] (Holds on Transfer Gear) (Gold) L1991-Up	1	6502611
	K92187	Snap Ring Kit, [A604[(15-Ring Complete) 1989-96	1	77680
	K92187A	Snap Ring Kit, [A604] (Short) (Underdrive / Overdrive / Reverse Only*) 1989-96	1	77681
	K92187B	Snap Ring Kit, [A604] (15 Ring-Complete) 1997-Up	1	77681A
860	92600A	Snap Ring, [A604] (Holds Underdrive Pressure Plate) (.070" Thick) 1989-E90	1	4377189
860	92600B	Snap Ring, [A604] (Holds Underdrive Pressure Plate) (.060" Thick) 1990-92	1	
860	92600C	Snap Ring, [A604] (Holds Underdrive Pressure Plate) (.076" Thick) (6-5/16"OD) 1993-96	1	4567602
860	92600D	Snap Ring, [A604] (Holds Underdrive Pressure Plate) (.090" Thick) 1997-Up	1	
861	92605A	Snap Ring, [A604] (Overdrive Pressure Plate) (Bottom) (.061" Thick) (Wavy) (6-7/8"OD)	1	4505621
862	92603	Snap Ring, [A604] (Holds Spring to Piston) (.060" Thick) (5.325"OD)	1	4412203
863	92601A	Snap Ring, [A604] (Holds Low / Reverse Pressure Plate In Case) (.068" Thick) (7"OD) 89-97	1	4799858AA
863	92601B	Snap Ring, [A604] (Holds Low/Reverse Pressure Plate In Case) (.076" Thick) (7"OD) 98-Up	1	
875	92608	Snap Ring, [A604] (Holds Input Clutch Retainer In) (.095" Thick) (2.595"OD) (With 2-Eyelets)	1	
876	92600	Snap Ring, [A604] (Under the Underdrive Pressure Plate) (.062" Thick) 1989-96	1	4412307
876	92600E	Snap Ring, [A604] (Under the Underdrive Pressure Plate) (.075" Thick) 1997-Up	1	4659980
877	92609	Snap Ring, [A604] (Holds Underdrive Retainer In) (.077" Thick) (2.286"OD) (With 2-Eyelets)	1	6501715
880	92607	Snap Ring, [A604] (Holds Input Shaft to Hub) (.061" Thick) (1.030"OD) (*Wire Type)	1	6501702
882	92602	Snap Ring, [A604] (Front Planet to Rear Ring Gear) (.061" Thick) (4.720"OD)	2	6035238
883	92604	Snap Ring, [A604] (Holds 2nd-4th Clutch Retainer In) (.061" Thick) (7"OD)	1	4505591
885	92601	Snap Ring, [A604] (Under Low / Reverse Pressure Plate) (Selective)	1	4412395
891	92605	Snap Ring, [A604] (Overdrive Pressure Plate) (Top) (.069" Thick)	1	4531411
892	92606	Snap Ring, [A604] (Holds Reverse Pressure Plate In) (.061" Thick)	1	4377195
892	92606A	Snap Ring, [A604] (Holds Reverse Pressure Plate In) (.071" Thick)	1	4412871
892	92606B	Snap Ring, [A604] (Holds Reverse Pressure Plate In) (.081" Thick)	1	4412872

A604 (40TE/41TE-FWD/41AE-AWD)

892	92606C	Snap Ring, [A604] (Holds Reverse Pressure Plate In) (.090" Thick)	1	4412873
893	92610	Snap Ring, [A604] (Holds Low / Reverse Piston In)	1	6501853
899	92611	Snap Ring, [A604] (Transfer Shaft Retainer)	1	6501936
930	K92870A	Accumulator Assembly, [A604] (2-4) 1989-Up	1	
931	92951	Spring, [A604] (2-4 Accumulator) (Outer) 1989-03	1	
931B	92951B	Spring, [A604] (2-4 Accumulator) (Inner) 1989-03	1	
932	92870A	Piston, [A604] (2-4 Accumulator) 1989-Up	1	
935	K92870A	Accumulator Assembly, [A604] (Overdrive) (With 2-Springs) 1989-Up	1	
936	92951	Spring, [A604] (Overdrive Accumulator) 1989-95 (*Also Fits Underdrive Accumulator 1989-95)	1	
936B	92951B	Spring, [A604] (Overdrive Accumulator) 1996-Up (*Also Fits Underdrive Accumulator 1996-Up)	1	4471880
937	92870A	Piston, [A604] (Overdrive Accumulator) 1989-Up (Aluminum) (Takes 2-Teflon Rings)	1	4446620
937	92834-05K	Sleeve Kit, [A604] (Overdrive / 2-4 / Low / Reverse / Underdrive Accumulator) (*Restores OEM Shifts) 1989-03	1	Sonnax
937	92870B	Piston, [A604] (Overdrive Accumulator) (Bonded) 2004-Up (*Also 2-4, Low / Reverse & Underdrive Accumulator)	1-3	
937	92834-03K	Sleeve Kit, [A604] (Overdrive / 2-4 / Low / Reverse / Underdrive Accumulator) 1989-03 (*Gives Shorter Than OE Shifts)	1	Sonnax
947	92870A	Piston, [A604] (Low / Reverse Accumulator) (Aluminum) 1989-03	1	
949	92885A	Retainer, [A604] (Low / Reverse Accumulator) (Aluminum) 1989-03	1	4431617
950	K92870	Accumulator Assembly, [A604] (Underdrive) (With 1-Spring) 1989-Up	1	
950	K92870A	Accumulator Assembly, [A604] (Overdrive & Underdrive) (With 2-Springs) 1989-Up	1	
951	92851	Spring, [A604] (Overdrive Accumulator) (Outer) (2-Spring Type) 1989-Up	1	4471880
951B	92851A	Spring, [A604] (Overdrive Accumulator) (1-Spring Type) 1989-Up	1	
951	92851B	Spring, [A604] (Overdrive Accumulator) (Inner) (2-Spring Type) 1989-Up	1	
952	92870A	Piston, [A604] (Overdrive Accumulator)	1	4446620
957	92755	Retainer, [A604] (Low / Reverse Clutch Piston) (Tin) 1989-03	1	4431648
957	92755A	Retainer, [A604] (Low / Reverse Clutch Piston) (Tin) 2004-Up (With Bleeder)	1	4800255AA
	K92755	Retainer Kit, [A604] (Low / Reverse Clutch Piston) (Retainer With Bolts) 1989-Up	1	77670
960	92912	Piston, [A604] (Underdrive Clutch) (With Molded Rubber)	1	4431612
961	92911A	Piston, [A604] (Overdrive & Reverse Clutch) (8-Lug Overdrive Pressure Plate)	1	5013476
961	92911	Piston, [A604] (Overdrive & Reverse Clutch) (4-Lug Overdrive Pressure Plate)	1	5013476AA
967	92754	Piston, [A604 / 40TE] (Low / Reverse Clutch) 1989-03	1	
967	92754A	Piston, [A604 / 40TE] (Low / Reverse Clutch) (Bonded) (1.185" Thick) 2004-Up	1	
967	92754B	Piston, [A604 / 41TE] (Low / Reverse Clutch) (Bonded) (1.040" Thick) 2004-Up	1	
968	61837	Piston, [A604 / 40TE / 41TE] (2-4 Clutch) (Aluminum) (.668" Thick) 1989-2003	1	4883078
968	61837A	Piston, [A604 / 40TE] (2-4 Clutch) (Bonded) (.855" Thick) 2004-Up	1	4800234AA
968	61837B	Piston, [A604 /41TE / 41AE] (2-4 Clutch) (Bonded) (.665" Thick) 2004-Up	1	4800257AA
970	92977	Spring, [A604] (Underdrive Clutch Return) (3.002"OD) (2.250" Tall)	1	4377177
971	92802	Spring, [A604] (Overdrive & Reverse Clutch Return) (.063" Thick) (4.992"OD) (8-Fingers)	1	4412202
977	92753	Spring, [A604] (Low / Reverse Clutch Return) (.072" Thick) (5.390"OD) (8-Fingers)	1	4412261
978	92810	Spring, [A604] (2nd-4th Clutch Return) (.063" Thick) (6-1/2"OD) (8-Fingers)	1	4412248
980	92910	Housing, [A604] (Underdrive Piston) (.555 Thick) 1989-Up	1	4431610
994	92677	Park Rod Actuator, [A604] (.413" Wide Roller)	1	4431634
995	K92678	Park Pawl, [A604] (With Pin & Spring) (.340"OD Pin)	1	4883505AA
996	92280A	Cooler Line Fitting, [A604] (3/8" Push-In)	1	

A606 (42LE)

FWD 4 Speed

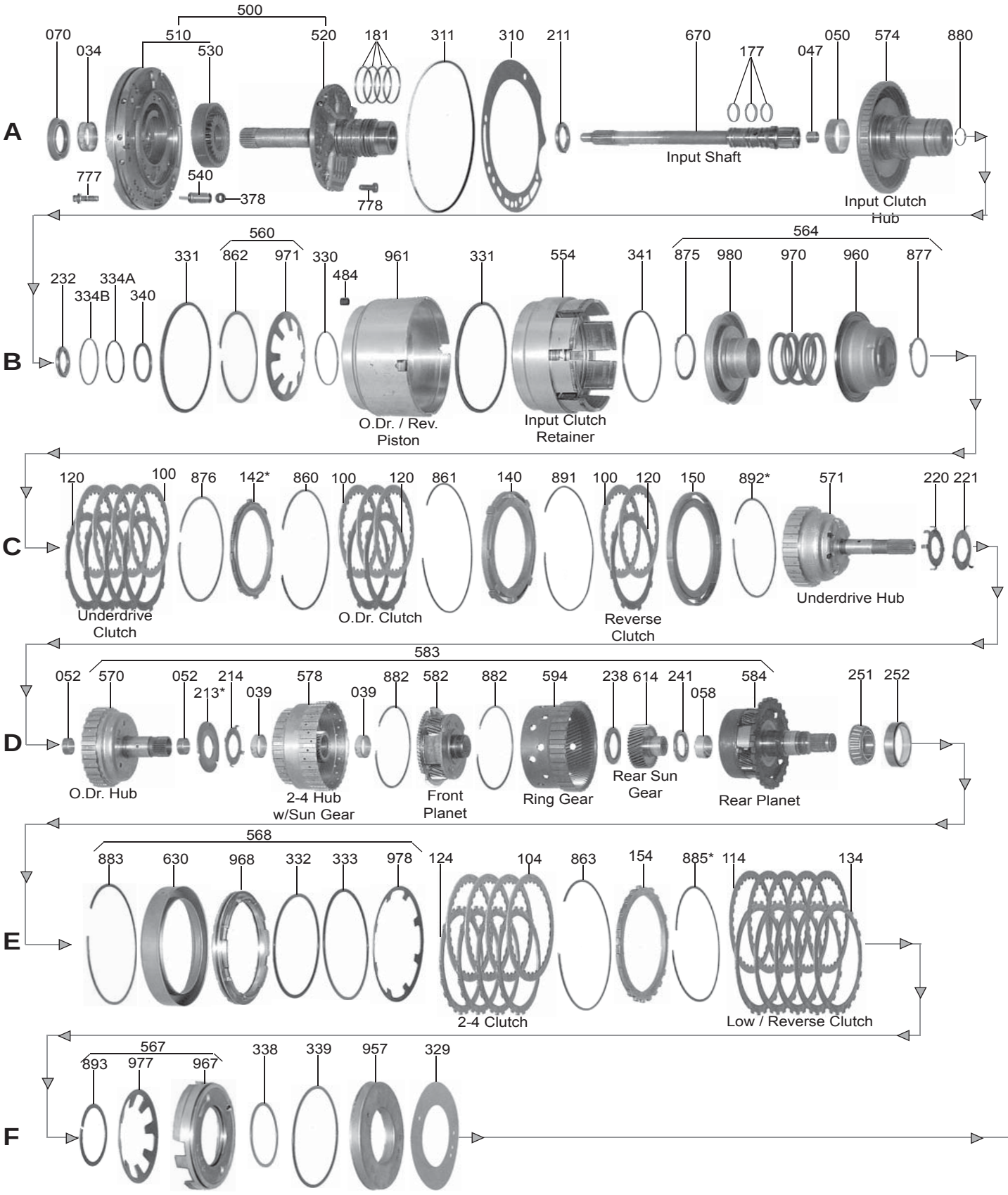

FWD 4 Speed

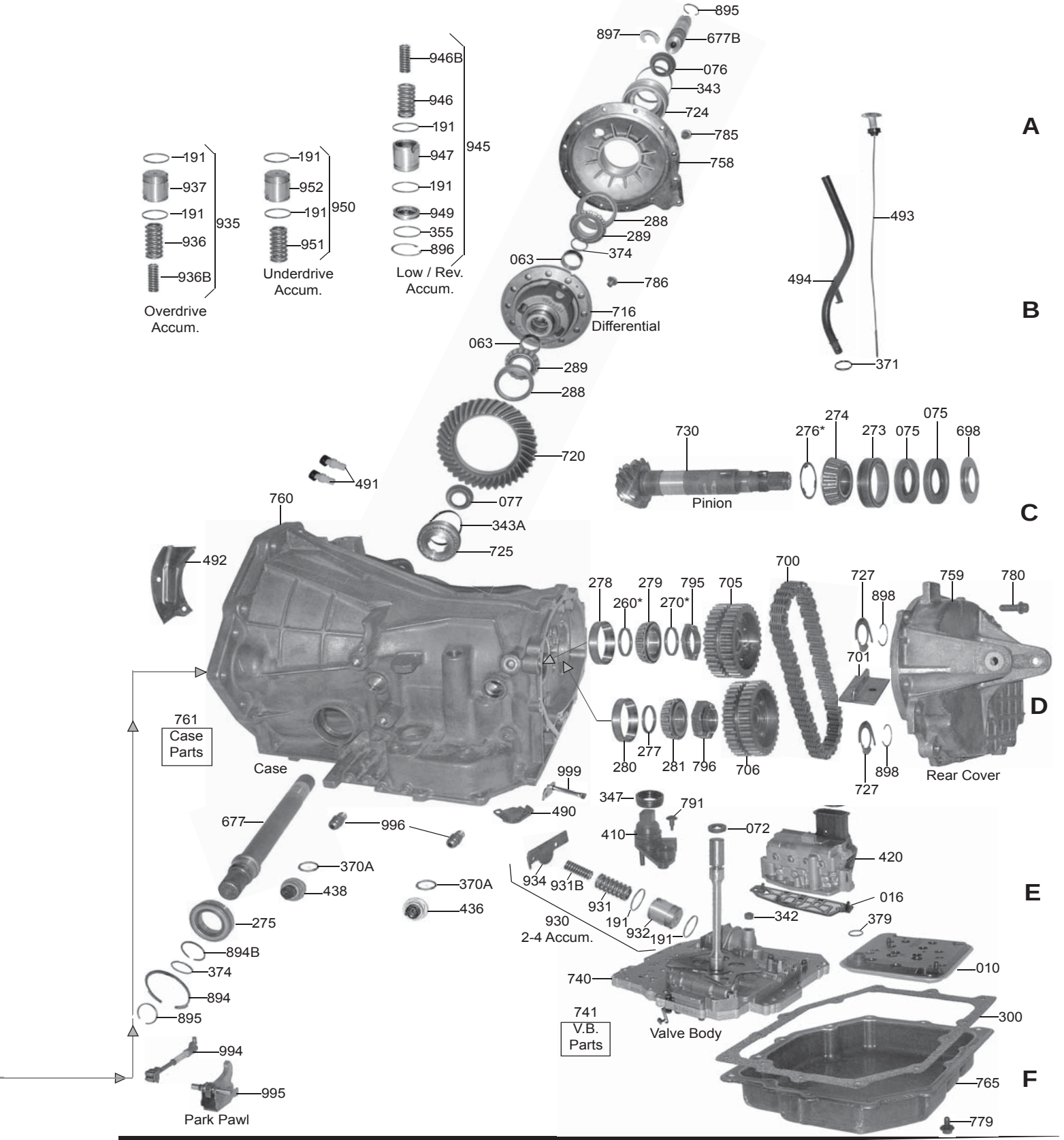
A
B
C
D
E
F
895
897
677B
076
343
724
785
758
946B
946
191
947
945
191
949
355
896
191
937
191
936
935
936B
Overdrive Accum.
191
952
191
951
950
Underdrive Accum.
Low / Rev. Accum.
288
289
374
063
786
716
Differential
063
289
288
720
077
343A
725
491
760
492
761
Case Parts
Case
730
Pinion
276*
274
273
075
075
698
493
494
371
278
279
795
705
260*
270*
700
727
898
701
759
780
Rear Cover
277
280
281
796
706
727
898
999
490
347
791
410
072
420
016
342
379
934
931B
931
191
932
191
930
2-4 Accum.
677
996
370A
438
370A
436
275
894B
374
894
895
994
995
Park Pawl
740
741
V.B. Parts
Valve Body
010
300
765
779

A606 (42LE)

ILL#	PART#	DESCRIPTION	QTY	REF #
		OVERHAUL KITS		
	K61900	Overhaul Kit, [A606] 1993-Up	1	
		MASTER L/STEEL KIT		
	DK6100-S	Master L/Steels, [A606] 1993-Up	1	
		MASTER W/STEEL KIT		
	DK6100	Master W/Steels, [A606] 1993-Up	1	
		FILTER		
010	61710	Filter, [A606] 1993-Up	1	4796730
		FILTER KIT		
	FK61710	Filter Kit, [A606] 1993-Up	1	
		MISC. FILTERS		
	92712	Screen, [A606] (Low / Reverse Piston Feed) (Orifice Block) 1993-Up	1	3878313
016	61111	Filter/Plate, [A606] (Solenoid Assembly to Valve Body) 1993-Up	1	
018	32777	Screen, [A606] (Valve Body Regulator Feed)	1	
		BUSHINGS		
	K61001	Bushing Kit, [A606] 1993-95	1	
	K61001A	Bushing Kit, [A606] 1996-Up	1	
034	12502	Bushing, [A606] (Pump Body) (Babbit) 1993-Up	1	2466796
034	12502A	Bushing, [A606] (Pump Body) (Bronze) 1993-Up	1	
039	92005	Bushing, [A606] (2-4 Clutch Hub) 1993-95	2	
039	92005A	Bushing, [A606] (2-4 Clutch Hub) 1996-Up	2	
047	92002	Bushing, [A606] (Input Shaft) (Rear) (.595”OD) 1993-00	1	4412211
047	92002A	Bushing, [A606] (Input Shaft) (Rear) (.605”ID) 2001-Up	1	
050	92003	Bushing, [A606] (Input Clutch Hub) (Front) 1993-Up	1	4377170
050	92003-01K	Bushing, [A606] (Input Clutch Hub) (Front) (*Tighter Tolerances Than OEM) **(*Requires: 92003TL)**	1	Sonnax
	92003TL	Bushing Tool, [A606] (*For 92003-01K)	1	Sonnax
052	92004	Bushing, [A606] (Overdrive Clutch Hub) (.365” Tall) 1993-95	2	4412219
052	92004A	Bushing, [A606] (Overdrive Clutch Hub) (.283” Tall) 1996-Up	2	
052	92004SP	Bushing, [A606] (Overdrive Clutch Hub) (1-Piece) 1993-95	1	Sonnax
052	92004L	Bushing, [A606] (Overdrive Clutch Hub) (1-Piece) (*Fits Hub With .937”ID) 1996-Up	1	Sonnax
052	92004LOS	Bushing, [A606] (Overdrive Clutch Hub) (1-Piece) (*Fits Hub With .941”ID) 1996-Up	1	Sonnax
058	92006	Bushing, [A606] (Rear Planet) 1993-Up	1	4412230
063	61002	Bushing, [A606] (Differential Housing) (Inner) 1993-Up	2	4567225
		METAL CLAD SEALS		
070	12575	Seal, [A606] (Front) (With Flange) 1993-Up	1	4269057
070	A12575	Seal, [A606] (Front) (Without Flange) 1993-Up	1	
072	92574	Seal, [A606] (Linkage Valve Body Stem Seal) (Rubber) 1993-Up	1	4412836
075	61364	Seal, [A606] (Transfer Shaft) (Small) (With 12-Indentions) 1993-Up	1	4567809
075	61365	Seal, [A606] (Transfer Shaft) (Large) (Smooth) 1993-Up	1	4567811
076	61367	Seal, [A606] (Right Axle) (Outer Differential Adjuster) 1993-Up	1	4539891
077	61366	Seal, [A606] (Left Axle) (Inner Differential Adjuster) 1993-Up	1	4539796
		FRICTION CLUTCH		

100	A92138	Friction, [A606] (Underdrive & Reverse Clutch) (.071") (Tan) 1993-Up	10	4505629
100	B921238	Friction, [A606] (Overdrive Clutch) (.073") (2nd Design) (Hi-Energy) 1993-Up	10	4531678
100	K92138X	Friction & Steel Kit, [A606] (Overdrive Clutch) (.073") (High Energy) 1993-Up	1	Alto
104	B92147	Friction, [A606] (2-4 Clutch) (.086") (Hi-Energy) 1993-Up	4	4377125
104	A92147	Friction, [A606] (2-4 Clutch) (.086") (Tan) 1993-Up	4	4567212
114	B92134	Friction, [A606] (Low / Reverse Clutch) (.072") (Hi-Energy) 1993-Up	5	4567573
114	A92134	Friction, [A606] (Low / Reverse Clutch) (.072") (Tan) 1993-Up	5	4377134
	K61100	Friction Module, [A606] (With Hi-Energy Frictions) 1990-Up	1	
		STEEL CLUTCH		
120	92183	Steel, [A606] (Overdrive / Underdrive / Reverse Clutch) (.068")	8	4659053
124	92135	Steel, [A606] (2-4 Clutch) (.101") 1993-Up	4	4659054
134	92162	Steel, [A606] (Low / Reverse Clutch) (.067") 1993-Up	5	4659055
	K61110	Steel Module, [A606]	1	
		CLUTCH PRESSURE PLATES		
140	92191A	Pressure Plate, [A606] (Overdrive Clutch) (4-Lug) 1993-Up	1	4531556
142	K92186	Pressure Plate Kit, [A606] (Underdrive Clutch) (.215") 1993-96 (*With #92600C Snap Ring)	1	4723684
142	K92186A	Pressure Plate Kit, [A606] (Underdrive Clutch) (.235") 1993-96 (*With #92600C Snap Ring)	1	5017514AA
142	K92186B	Pressure Plate Kit, [A606] (Underdrive Clutch) (.255") 1993-96 (*With #92600C Snap Ring)	1	5017513AA
142	K92186C	Pressure Plate Kit, [A606] (Underdrive Clutch) (.275") 1993-96 (*With #92600C Snap Ring)	1	4723681
142	K61187	Pressure Plate Kit, [A606] (Underdrive Clutch) (.228") 1997-Up	1	
142	K61187A	Pressure Plate Kit, [A606] (Underdrive Clutch) (.248") 1997-Up	1	
142	K61187B	Pressure Plate Kit, [A606] (Underdrive Clutch) (.268") 1997-Up	1	
150	92194	Pressure Plate, [A606] (Reverse Clutch) (.340" Thick) 1993-Up	1	4531905
150	92194B	Pressure Plate, [A606] (Reverse Clutch) (.186" Thick) 1997-Up	1	4531925
154	61188	Pressure Plate, [A606] (Low / Reverse Clutch) (.210") 1993-Up	1	
154	61188A	Pressure Plate, [A606] (Low / Reverse Clutch) (.230") 1993-Up	1	4897452AA
154	61188B	Pressure Plate, [A606] (Low / Reverse Clutch) (.250") 1993-Up	1	4897454AA
154	61188C	Pressure Plate, [A606] (Low / Reverse Clutch) (.270") 1993-Up	1	4897456AA
		VALVE BODY KITS		
	K92908	Shift Kit, [A606] 1993-Up	1	Transgo
		OIL SEALING RINGS		
	K92903	Ring Kit, [A606] 1993-Up	1	
177	92301	Ring, [A606] (Input Shaft) (1.443"OD) (Teflon) 1993-Up	3	4446543
181	34713T	Ring, [A606] (Stator Support) (Updated) (2.062"OD) (Teflon) 1993-Up	4	8675729
181	12600A	Ring, [A606] (Stator Support) (2.062"OD) (Metal) 1993-Up	1	8675729
191	92302	Ring, [A606] (Accumulator) (Non Rotating) (1.013"OD) (Graphite) 1993-Up	8	4446544
191	92302T	Ring, [A606] (Accumulator) (1.013"OD) (Teflon) 1993-Up	8	
		WASHERS & BEARINGS		
	K92600	Washer Kit, [A606] 1993-Up	1	
	K92906	Bearing Kit, [A606] 1993-Up	1	
211	92633	Bearing, [A606] (Stator to Input Drum) (1.713"OD) 1993-Up	1	4412209
213	92622	Race, [A606] (Overdrive Hub to 2-4 Hub) (.039") (3-Slot) 1993-Up	1	4431662
213	92622H	Race, [A606] (Overdrive Hub to 2.4 Hub) (.048") (3-Slot) 1993-Up	1	4431663
213	92622A	Race, [A606] (Overdrive Hub to 2.4 Hub) (.057") (3-Slot) 1933-Up	1	4431664
213	92622J	Race, [A606] (Overdrive Hub to 2.4 Hub) (.066") (3-Slot) 1933-Up	1	4431665
213	92622B	Race, [A606] (Overdrive Hub to 2.4 Hub) (.074") (3-Slot) 1933-Up	1	4431666

A606 (42LE)

213	92622K	Race, [A606] (Overdrive Hub to 2.4 Hub) (.083") (3-Slot) 1993-Up	1	4431667
213	92622C	Race, [A606] (Overdrive Hub to 2.4 Hub) (.091") (3-Slot) 1993-Up	1	4431668
213	92622D	Race, [A606] (Overdrive Hub to 2.4 Hub) (.100") (3-Slot) 1993-Up	1	4431669
213	92622L	Race, [A606] (Overdrive Hub to 2.4 Hub) (.109") (3-Slot) 1993-Up	1	4431670
213	92622E	Race, [A606] (Overdrive Hub to 2.4 Hub) (.117") (3-Slot) 1993-Up	1	4431671
213	92622M	Race, [A606] (Overdrive Hub to 2.4 Hub) (.126") (3-Slot) 1993-Up	1	4431672
213	92622F	Race, [A606] (Overdrive Hub to 2.4 Hub) (.135") (3-Slot) 1993-Up	1	4446601
214	92627	Washer, [A606] (Overdrive Hub to 2-4 Hub) (4-Tab) (1.263"ID) 1993-Up	1	4412216AB
220	92625	Washer, [A606] (Underdrive Hub to Overdrive Hub) (5-Tab) (.050" Thick) (1.260"ID) 1993-Up	1	4471855
221	92621	Race, [A606] (Underdrive Hub to Overdrive Hub) (3-Tab) (.031" Thick) (1.265"ID) 1993-Up	1	4431973
232	92635	Bearing, [A606] (Input Drum to Underdrive Hub) (1.790"OD) (*Also Rear Sun Gear to Rear Planet) 1993-Up	1	4467262
238	92638	Bearing, [A606] (Front Planet to Rear Sun Gear) 1993-Up	1	4412229
241	92635	Bearing, [A606] (Rear Sun Gear to Rear Planet) 1993-Up	1	
251	92964	Bearing, [A606] (Presses on Rear Planet) 1993-Up	1	LM300848
252	92769	Cup Race, [A606] (Rear Planet Bearing to Case) 1993-Up	1	LM300811
260	61640	Shim, [A606] (Output Shaft to Rear Bearing Selective) (5.17mm - 6.06mm)	1	5280020
270	61641	Shim, [A606] (Output Shaft to Drive Sprocket Selective) (2.64 mm - 4.31mm)	1	5280053
273	61822	Cup Race, [A606] (Pinion Bearing) 1993-Up	1	M802011AP
274	61821	Bearing, [A606] (Pinion) 1993-Up	1	25584
275	61827	Ball Bearing, [A606] (Axle Shaft to Case) (Sealed Type) 1993-Up	1	4539879
276	61642	Shim, [A606] (Pinion Head to Bearing Selective) (.681mm - 1.139mm)	1	4539677
277	61643	Shim, [A606] (Under Rear Pinion Shaft Bearing Selective) (3.53mm - 4.69mm)	1	
278	32978	Race, [A606] (Drive Transfer Gear Bearing) 1993-Up	1	JL69310
279	32977	Cone Bearing, [A606] (Drive Transfer Gear to Case) 1993-Up	1	JL69349
280	61824	Race, [A606] (Driven Transfer Gear Bearing) 1993-Up	1	26283
281	61823	Bearing, [A606] (Driven Transfer Gear) 1993-Up	1	26131H
288	61826	Cup Race, [A606] (Differential to Retainer) 1993-Up	2	LM603012
289	61825	Bearing, [A606] (Differential Housing to Retainer) 1993-Up	2	LM603049
	39539-Z5	Shim, [A606] (Differential Bearing) (.005") 1993-Up	1	Sonnax
		GASKETS & RUBBER COMPONENTS		
300	61500	Gasket, [A606] (Bottom Pan) (Cork) 1993-Up	1	
300	61500**D** or **F**	Gasket, [A606] (Bottom Pan) (Fiber) 1993-Up **(*Duraprene** or **Farpack)**	1	
310	61276	Gasket, [A606] (Pump) 1993-Up	1	4659126
311	32102	O-Ring, [A606] (Pump) 1993-Up	1	4659945
329	92106	Gasket, [A606] (Low / Reverse Piston Retainer) 1993-Up	1	4431649
329	92106-01K	Gasket /Seal Kit, [A606] (Low / Reverse Piston Retainer) (Steel Gasket / Shim With Slot) (*Rubber Grommet)	1	Sonnax
330	92158	O-Ring, [A606] (Overdrive & Reverse Clutch) (Inner) 1993-Up	1	5033158
331	92143	Lip Seal, [A606] (Overdrive & Reverse Clutch) (Outer) 1993-Up	2	4412875
332	92142	D-Ring, [A604] (2nd-4th Clutch) (Inner) 1993-Up	1	4659376
333	92141	D-Ring, [A606] (2nd-4th Clutch) (Outer) 1993-Up	1	4659374
334A	92169	O-Ring, [A606] (Input Clutch Rear) (.103") (Red) (Inner) 1993-Up	1	6502269
334B	92171	O-Ring, [A606] (Input Clutch Front) (.103") (Blue) (Inner) 1993-Up	1	6502271
338	92145	D-Ring, [A606] (Low / Reverse Clutch) (Inner) 1993-Up	1	4659856
339	92140	D-Ring, [A606] (Low / Reverse Clutch) (Outer) 1993-Up	1	4659855
340	92111	Lip Seal, [A606] (Underdrive Clutch) (Inner) 1993-Up	1	4377174
341	92110	Lip Seal, [A606] (Underdrive Clutch) (Outer) 1993-Up	1	4412875

342	92144	Seal, [A606] (2nd-4th Feed) (Valve Body to Case) 1993-Up	1	4412291
343A	61532	O-Ring, [A606] (Differential Adjuster) (Inner) 1993-Up	1	6502797
343	61533	O-Ring, [A606] (Differential Adjuster) (Outer) 1933-Up	1	6502452
347	92521	Grommet, [A606] (PRNDL Switch to Case) (Thin) (1.350"OD Case Connector Hole) (Rubber) 1993-97	1	
347	92521A	Grommet, [A606] (PRNDL Switch to Case) (Thick) (1.420"OD Case Connector Hole) (Rubber) 1998-Up	1	
370	92107	O-Ring, [A606] (Input Speed-O Sensor) (Small) 1993-Up	1	6501700
370	92108	O-Ring, [A606] (Output Speed-O Sensor) (Large) 1993-Up	1	6501701
371	3291	O-Ring, [A606] (Filler Tube) 1993-Up	1	6264902
374	61122	O-Ring, [A606] (Axle Shaft & Short Stub Shaft) 1993-Up	2	6502363
378	92159	O-Ring, [A606] (Cooler By-Pass Valve) 1993-Up	1	
379	92167	O-Ring, [A606] (Filter) 1993-Up	1	4412844
		TECHNICAL MANUALS		
	TMA606	Technical Manual, [A606] (42LE) 1993-Up	1	ATSG
	TM41TE/42LE	Code Book, [A606] (42LE) 1993-Up	1	ATSG
		ELECTRICAL COMPONENTS		
410	61928	Sensor, [A606] (Neutral Safety / Manual Position) (Round Pin Terminals) 1993-97	1	4659492AC
410	61928A	Sensor, [A606] (Neutral Safety / Manual Position) (9-Prong) (Spade Terminals) 1998-Up	1	4659677AB
420	61936	Solenoid Pack, [A606] 1993-Up	1	4539766
	K61902	Repair Kit, [A606] (Solenoid Pack) 1993-Up	1	
436	92887	Speed Sensor, [A606] (Output) (.928"OD Threads) 1993-Up	1	4800879
438	92888	Speed Sensor, [A606] (Input) (.855"OD Threads) 1993-Up	1	4800878
	61932R	Wire Harness, [A606] (External) (8-Pin) (Solenoid Repair) 1993-Up	1	Rostra
	92933	Repair Kit, [A606] (Wire Harness) (Input & Output Speed Sensor Connector) (With Heat Shrinks)	1	Rostra
		MISC. COMPONENTS		
484	92713	Screened Orifice, [A606] (In Overdrive / Reverse Piston)	1	4531903
	61844	Vent, [A606] (Baffle) (Tin Shield Under Chain For Case)	1	
491	61843	Vent Tube Assembly, [A606] (With Vents) (*2 Per Assembly)	1	
492	61844A	Vent Baffle, [A606] (Tin Shield In Differential For Vent)	1	4593028
		HARD PARTS		
500	61912	Pump, [A606] (.708" Thick Gears) 1993-99 (*Will Retro For Late)	1	
500	61912A	Pump, [A606] (Dual Cyclodial) (.495" Thick Gears) 2000-Up	1	
510	61916	Pump Body W/Gears, [A606] (.708" Thick Gears) 1993-99	1	
510	61916A	Pump Body W/Gears, [A606] (Dual Cyclodial) (.495" Thick Gears) 2000-Up	1	
520	61913	Stator, [A606] (Pump Cover) 1993-Up	1	
		PUMP COMPONENTS		
530	K92201	Pump Gears, [A606] (25 Teeth Inner Gear) (.708" Thick) 1993-99	1	
530	K92201A	Pump Gears, [A604] (12 Teeth Inner Gear) (.495" Thick) 2000-Up	1	
540	92890	By-Pass Valve, [A606] (In Case Under Pump)	1	4539880
540	92890A	By-Pass Valve, [A606] (Splices Into The Cooler Line)	1	
		HARD PARTS (Continued)		
554	92923	Drum, [A606] (Input Clutch Retainer) 1993-96	1	4505623
554	92923A	Drum, [A606] (Input Clutch Retainer) 1997-Up	1	4659935
570	92807	Hub, [A606] (Overdrive & Reverse) (1.140"OD Shaft) 1993-95	1	
570	92807A	Hub, [A606] (Overdrive & Reverse) (1.160"OD Shaft) 1996-Up	1	4659993

A606 (42LE)

571	92806	Hub, [A606] (Underdrive Clutch With Solid Shaft)	1	4431615
574	92248A	Hub, [A606] (Input Clutch) (*For 4-Ring Stator) 1993-Up	1	5241064
578	92922	Hub & Sun Gear, [A606] (2nd - 4th Clutch) (1.140"OD Bushing) 1993-95	1	4431622
578	92922A	Hub & Sun Gear, [A606] (2nd - 4th Clutch) (1.160"ID Bushing) 1996-Up	1	4659618AB
582	92747	Planet, [A606] (Front) 1993-95	1	4567539
582	92747A	Planet, [A606] (Front) (With Heat Treated Splines) 1996-Up (*Will Retro to 1993)	1	4567539AB
583	K61749	Planet Kit, [A606] (4 Gear Rear Planet) (Contains: # 570, 578, 582, 594, 614, & 584) 93-Up	1	
583	K61749A	Planet Kit, [A606] (5 Gear Rear Planet) (Contains: # 570, 578, 582, 594, 614, & 584) 93-Up	1	
584	61730	Planet, [A606] (Rear With Output Shaft) (4 Gear) 1993-95	1	5014201AA
584	61730A	Planet, [A606] (Rear With Output Shaft) (5 Gear) 1996-Up (*Will Retro to 1993)	1	4659111
594	92748	Ring Gear, [A606] (Rear Planet) 1993-Up	1	4799794
614	92750	Sun Gear, [A606] (Rear Planet) 1993-Up	1	4377080
630	92650	Retainer, [A606] (2nd - 4th Clutch Piston) 1993-Up	1	
630	K61836A	Retainer Kit, [A606] (2nd - 4th Clutch Piston) (Contains: 92968, 92232, & 92233) 1993-Up	1	4883078
670	61828	Input Shaft, [A606] 1993-Up	1	4626452
677	61849	Shaft, [A606] (Axle) (Goes Through Case) 1993-Up	1	4567216
698	61845	Oil Baffle, [A606] (*For Rear Pinion Bearing) 1993-Up	1	4593035
700	K61885	Kit, [A606] (Dual Chains, Sprockets, Snubber) (*Update 93-94 Single Chain to Dual Chain)	1	4539777
700	61885A	Chain, [A606] (Late Dual Type) (31-Links) (.775") 1995-Up	1	4659190
701	61848A	Chain Snubber, [A606] (Bolts to Case) (Tan) (Medium) 1993-94	1	
701	61848B	Chain Snubber, [A606] (Bolts to Case) (Black) (Thin) 1993-94	1	
701	61848C	Chain Snubber, [A606] (Bolts to Case) (Green) (Thick) 1993-94	1	
701	61848	Chain Snubber, [A606] (Rubber Faced For Dual Chain) 1995-Up	1	4778989
705	61846	Sprocket, [A606] (Drive) (32 Teeth) (Single Type Chain) 1993-94	1	
705	61846A	Sprocket, [A606] (Drive) (32 Teeth) (Dual Type Chain) 1995-Up	1	
706	61847	Sprocket, [A606] (Driven) (33 Teeth) (.770" Spline Length) 1993-94	1	
706	61847A	Sprocket, [A606] (Driven) (33 Teeth) (.770" Spline Length) 1995-Up (Dual Chain Type)	1	4695834
716	61844	Differential Housing, [A606] (Less Ring Gear)	1	
724	61798	Retainer, [A606] (Differential Bearing With Race) (Screws In Aluminum Cover)	1	4539776
725	61799	Retainer, [A606] (Axle) (With Race) (Aluminum) (Screws In Case)	1	4539890
727	61400	Wavy Washer, [A606] (Under Snap Ring on Sprocket) (Takes 2)	2	4539901
730	61845	Ring & Pinion Set, [A606] (11 Teeth Pinion) (39 Teeth Ring Gear)	1	4567617
		VALVE BODIES (REBUILT)		
740	CR-2746	Valve Body, [A606] (1st Design) (5-Check Balls) (Less Solenoid Pack) 1993-94	1	
740	CR-2747	Valve Body, [A606] (2nd Design) (4-Check Balls) (Less Solenoid Pack) 1995-Up	1	
		VALVE BODIES		
740	61750	Valve Body, [A606] (Less Solenoid Pack) 1993	1	
740	61750A	Valve Body, [A606] (Less Solenoid Pack) 1994-95	1	
740	61750B	Valve Body, [A606] (Less Solenoid Pack) (With PRNDL Switch) (PRNDL Switch Is Black Switch on Valve Body) (*No Coil Spring Under Case Connector) 1996-97	1	
740	61750C	Valve Body, [A606] (Less Solenoid Pack) (With PRNDL Switch) (PRNDL Switch Is Black Switch on Valve Body) (*Has 1-Coil Spring Under Case Connector) 1998-Up	1	
		VALVE BODY COMPONENTS		
741	92835-02K	Plugs, [A606] (Switch Valve) (2-Plugs)	1	Sonnax
741	92835-18K	Plugs, [A606] (Switch Valve) (Oversized) **(*Requires: 92835-RM)** (2-Oversized Plugs, & 1-End Plug)	1	Sonnax
	92835-RM	Reamer, [A606] **(*For Oversize Plugs # 92835-18K)**	1	Sonnax

741	92835-21	Valve, [A606] (Solenoid Switch) (Oversize) **(*Must Use F-92835-TL Reamer)**	1	Sonnax
	F-92835-TL	Reamer, [A606] (*For 92835-21)	1	Sonnax
741	92835-03K	Valve Kit, [A606] (Converter Regulator) (1-Switch Valve & 1-Bias Valve)	1	Sonnax
741	61683	Manual Valve, [A606]	1	
		HARD PARTS (Continued)		
758	61843	Differential Cover, [A606] (Retainer) (Bolts to Case and Holds Differential In)	1	4567036
759	61175	Rear Cover, [A606] (Chain Cover) (2-Bolt Mount)	1	4659477
759	61175A	Rear Cover, [A606] (Chain Cover) (4-Bolt Mount)	1	
760	61170	Case, [A606] (3.3 L / 3.5L) (3-3/8" Top Bolts) **(*Specify Year)**	1	
760	61170A	Case, [A606] (2.5L / 3.2 L) (2-3/8" Top Bolts) **(*Specify Year)**	1	
		CASE COMPONENTS		
540	92890	By-Pass Valve, [A606] (In Case Under Pump) 1993-Up	1	4539880
		HARD PARTS (Continued)		
765	61840	Pan, [A606] (Bottom) 1993-Up	1	4539762
	B62	Bolt, [A606] (Flex Plate to Converter) 1993-Up	4	
795	61862	Nut, [A606] (Output Shaft) 1993-Up	1	6502476
796	61863	Nut, [A606] (Pinion Shaft) 1993-Up	1	6502447
	K92187	Snap Ring Kit, [A606] (15-Ring Complete) 1993-96	1	77680
	K92187A	Snap Ring Kit, [A606] (Short) (Underdrive, Overdrive, Reverse Only*) 1993-96	1	77681
	K92187B	Snap Ring Kit, [A606] (15-Ring Complete) 1997-Up	1	77681A
860	92600C	Snap Ring, [A606] (Holds Underdrive Pressure Plate) (.076" Thick) (6-5/16"OD) 1993-96	1	4567602
860	92600D	Snap Ring, [A606] (Holds Underdrive Pressure Plate) (.090" Thick) 1997-Up	1	
861	92605A	Snap Ring, [A606] (Overdrive Pressure Plate) (Bottom) (.061" Thick) (Wavy) (6-7/8"OD)	1	4505621
862	92603	Snap Ring, [A606] (Holds Spring to Piston) (.060" Thick) (5.325"OD)	1	4412203
863	92601A	Snap Ring, [A606] (Holds Low / Reverse Pressure Plate In Case) (.068" Thick) (7"OD) 1993-96	1	4799858AA
863	92601B	Snap Ring, [A606] (Holds Low / Reverse Pressure Plate In Case) 1997-Up	1	
875	92608	Snap Ring, [A606] (Holds Input Clutch Retainer In) (.095" Thick) (2.595"OD) (With 2-Eyelets)	1	6501812
876	92600E	Snap Ring, [A606] (Under the Underdrive Pressure Plate) (.060" Thick) 1993-Up	1	4659980
877	92609	Snap Ring, [A606] (Holds Underdrive Retainer In) (.077" Thick) (2.286"OD) (With 2-Eyelets)	1	6501715
880	92607	Snap Ring, [A606] (Holds Input Shaft to Hub) (.061" Thick) (1.030"OD) (*Wire Type)	1	6501702
882	92602	Snap Ring, [A606] (Front Planet to Rear Ring Gear) (.061" Thick) (4.720"OD)	2	6035238
883	92604	Snap Ring, [A606] (Holds 2nd-4th Clutch Retainer In) (.061" Thick) (7"OD)	1	4505591
885	92601	Snap Ring, [A606] (Under Low / Reverse Pressure Plate) (Selective)	1	4412395
891	92605	Snap Ring, [A606] (Overdrive Pressure Plate) (Top) (.069" Thick)	1	4531411
892	92606	Snap Ring, [A606] (Holds Reverse Pressure Plate In) (.061" Thick)	1	4377195
892	92606A	Snap Ring, [A606] (Holds Reverse Pressure Plate In) (.071" Thick)	1	4412871
892	92606B	Snap Ring, [A606] (Holds Reverse Pressure Plate In) (.081" Thick)	1	4412872
892	92606C	Snap Ring, [A606] (Holds Reverse Pressure Plate In) (.090" Thick)	1	4412872
893	92610	Snap Ring, [A606] (Holds Low / Reverse Piston In)	1	6501853
894	61602	Snap Ring, [A606] (Holds Ball Bearing to Case)	1	6502482
894B	61603	Snap Ring, [A606] (Holds Ball Bearing to Axle Shaft)	1	
895	61604	Snap Ring, [A606] (C.V. Axle to Axle Shaft)	2	4593012
896	61606	Snap Ring, [A606] (Holds Low / Reverse Accumulator In Case)	1	6501695
897	61607	Horse Shoe Clip, [A606] (Holds Axle Shaft #677B In Differential)	1	2853883
898	61608	Snap Ring, [A606] (Holds Sprocket)	2	6502448
930	K92870A	Accumulator Assembly, [A606] (2-4) 1993-Up	1	

A606 (42LE)

931	92951	Spring, [A606] (2-4 Accumulator) (Outer) 1993-03	1	
931B	92951B	Spring, [A606] (2-4 Accumulator) (Inner) 1993-03	1	
932	92870A	Piston, [A604] (2-4 Accumulator) 1993-Up	1	
935	K92870A	Accumulator Assembly, [A606] (Overdrive) (With 2-Spring) 1993-Up	1	
936	92951	Spring, [A606] (Overdrive Accumulator) (Outer) 1993-Up	1	
936B	92951B	Spring, [A606] (Overdrive Accumulator) (Inner) 1993-Up	1	4471880
937	92870A	Piston, [A606] (Overdrive Accumulator) (Aluminum) (Takes 2-Teflon Rings) 1999-03	1	4446620
937	92834-05K	Sleeve Kit, [A606] (Overdrive / 2-4 / Low / Reverse / Underdrive Accumulator) 1989-03 (*Restores OEM Shifts)	1	Sonnax
937	92870B	Piston, [A606] (Overdrive Accumulator) (Bonded) 2004-Up (*Also Fits: 2-4 / Low / Reverse / & Underdrive Accumulator)	1-3	4446620AC
293	92834-03K	Sleeve Kit, [A606] (Overdrive / 2-4 / Low / Reverse / Underdrive Accumulator) 1989-03 (*Gives Shorter Than OEM Shifts)	1	Sonnax
945	K92870A	Accumulator Assembly, [A606] (Low / Reverse) 1993-Up	1	
946	92951	Spring, [A606] (Low / Reverse Accumulator) (Outer) 1993-Up	1	4471880
946B	92951B	Spring, [A606] (Low / Reverse Accumulator) (Inner) 1993-Up	1	4567575
947	92870A	Piston, [A606] (Low / Reverse Accumulator) (Aluminum) 1993-03	1	4446620
949	92885A	Retainer, [A606] (Low / Reverse Accumulator) (Aluminum) 1993-03	1	4431617
949	92855B	Retainer, [A606] (Low / Reverse Accumulator) (Bonded) 2004-Up	1	
950	K92870	Accumulator Assembly, [A606] (Underdrive) (With 1-Spring) 1993-Up	1	
950	K92870A	Accumulator Assembly, [A606] (Overdrive & Underdrive) (With 2-Springs) 1993-Up	1	
951	92951	Spring, [A606] (Overdrive Accumulator) (Outer) (*Fits 2-Spring Type) 1993-Up	1	4471880
951B	92951B	Spring, [A606] (Overdrive Accumulator) (Inner) (*Fits 2-Spring Type) 1993-Up	1	
952	92870A	Piston, [A606] (Overdrive Accumulator) 1993-03	1	4446620
957	92755	Retainer, [A606] (Low / Reverse Clutch Piston) (Tin) 1993-03	1	4431648
957	92755A	Retainer, [A606] (Low / Reverse Clutch Piston) (Tin) 2004-Up (With Bleeder)	1	4800255AA
	K92755	Retainer Kit, [A606] (Low / Reverse Clutch Piston) (Retainer With Bolts) 1993-Up	1	77670
960	92912	Piston, [A606] (Underdrive Clutch) (With Molded Rubber) 1993-Up	1	4431612
961	61832	Piston, [A606] (Overdrive & Reverse Clutch) (4-Lug Overdrive Pressure Plate) 993-97	1	
961	61832B	Piston, [A606] (Overdrive & Reverse Clutch) 1998-Up	1	5013476AA
967	92754	Piston, [A606] (42LE) (Low / Reverse Clutch) (Aluminum) (1.055” Thick) 1993-Up	1	4431672
968	61837	Piston, [A606] (42LE) (2-4 Clutch) (Aluminum) (.668” Thick) 1989-03	1	4883078
968	61837B	Piston, [A606] (42LE) (2-4 Clutch) (Bonded) 2004-Up	1	4800257AA
970	92977	Spring, [A606] (Underdrive Clutch Return) (3.002”OD) (2.250” Tall)	1	4377177
971	61831	Spring, [A606] (Overdrive & Reverse Clutch Return) (.063” Thick) (4.992”OD) (8-Fingers)	1	4412202
977	61841	Spring, [A606] (Low / Reverse Clutch Return) (.072” Thick) (5.390”OD) (8-Fingers)	1	4412261
978	61839	Spring, [A606] (2nd - 4th Clutch Return) (.063” Thick) (6-1/2”OD) (8-Fingers)	1	4412248
980	92910	Housing, [A606] (Underdrive Piston) 1993-Up	1	4431610
	61675A	Shift Lever, [A606] (External)	1	
	61675B	Shift Lever, [A606] (With Rooster Comb) (Internal)	1	
994	61677	Park Rod Actuator Assembly, [A606]	1	4431634
995	K61678	Park Pawl Assembly, [A606] (With Rings & Pins)	1	4883505AA
996	61280	Cooler Line Fitting, [A606]	1	
999	61679	Chain Oiler Tube, [A606] (1-Bolt)	1	4539904

NOTES

BW T-35

ILL#	PART#	DESCRIPTION	QTY	REF #
		OVERHAUL KITS		
	K19900B	Overhaul Kit, [T-35] (Type 2 American) 1962-71	1	
	K19900C	Overhaul Kit, [T-35] (Type 1 Foreign) 1963-76	1	
		MASTER L/STEEL KIT		
	DK1900B-S	Master L/Steels Kit, [T-35] (Type 2 American) 1962-71	1	
	DK1900C-S	Master L/Steels Kit, [T-35] (Type 1 Foreign) 1963-76	1	
		MASTER W/STEEL KIT		
	DK1900B	Master W/Steels Kit, [T-35] (Type 2 American) 1962-71	1	
	DK1900C	Master W/Steels Kit, [T-35] (Type 1 Foreign) 1963-76	1	
		FILTER		
010	19755	Filter, [T-35] (American) (Front) 1962-66	1	3179973
010	19754	Filter, [T-35] (Foreign) (Front) (Without Scoop) 1963-76	1	
010	19756	Filter, [T-35] (American) (Rear) 1962-66	1	
010	19757	Filter, [T-35] (American) (With Shroud) 1967-71	1	3188896
		BANDS		
022	19313F	Band, [T-35] (Front) (Flex) 1962-Up	1	
022	19313	Band, [T-35] (Front) (Solid) (1-17/32" Wide) 1962-67	1	
022	19313C	Band, [T-35] (Front) (Solid) (1-27/32" Wide) 1967-69	1	
024	19313D	Band, [T-35] (Rear) 1962-Up	1	
		BUSHINGS		
	K19902	Bushing Kit, [T-35] 1962-Up	1	
034	19003	Bushing, [T-35] (Pump Body) 1962-Up	1	3205306
035	19012	Bushing, [T-35] (Inner Pump) 1962-Up	1	3205308
036	19011	Bushing, [T-35] (Stator) (Front) (22 / 23-Spline Input Shaft) 1962-Up	1	3205309
036	19011A	Bushing, [T-35] (Stator) (Front) (26-Spline Input Shaft) 1962-Up	1	
037	19009	Bushing, [T-35] (Stator) (Rear) 1962-Up	1	3205307
047	19005	Bushing, [T-35] (Input Shaft) 1962-Up	1	3205301
048	19010	Bushing, [T-35] (Forward Drum With Sun Gear & Planet) (Rear) 1962-Up	2	
058	19008	Bushing, [T-35] (Planet Sprag Race) 1962-Up	1	3205304
062	19006	Bushing, [T-35] (Output Shaft) 1962-Up	1	3205305
064	19001	Bushing, [T-35] (Case) 1962-Up	1	3203639
066	56014	Bushing, [T-35] (Extension Housing) (1.510"OD) (1.380"ID) (1.210" Long) (Babbit)	1	
066	19002A	Bushing, [T-35] (Extension Housing) (1.800"OD) (*Closed Drive Shaft Type)	1	
066	6014	Bushing, [T-35] (Extension Housing) (1.625"OD) (1.500"ID)	1	
		METAL CLAD SEALS		
070	19605	Seal, [T-35] (Front) (*Except-BMW) 1962-Up	1	3183886
072	19675	Seal, [T-35] (Manual Lever)	1	
074	19657A	Seal, [T-35] (Rear) (2"OD) 1963-Up	1	235728-3
074	19657	Seal, [T-35] (Rear) (1-3/4"OD) 1963-Up	1	
074	56557	Seal, [T-35] (Rear) (2-1/4" OD) 1963-Up	1	
		FRICTION CLUTCH		
106	19206A	Friction, [T-35] (Front & Rear Clutch) (.061") 1962-Up	8-10	

		STEEL CLUTCH		
126	19205	Steel, [T-35] (Forward Clutch) (.068") (Flat) 1962-Up	3-4	3164873
126	19205A	Steel, [T-35] (Forward Clutch) (.091") (Flat) 1962-Up	AR	
128	19222	Steel, [T-35] (Direct Clutch) (.068") (Dished) 1962-Up	4-5	3164863
128	19205	Steel, [T-35] (Direct Clutch) (.068") (Flat) 1962-Up	4-5	
128	19205A	Steel, [T-35] (Direct Clutch) (.091") (Oversize)	AR	
		MODULATORS		
160	19510A	Modulator, [T-35] (Screw In)	1	
		OIL SEALING RINGS		
	K19903C	Ring Kit, [T-35] 1971-Up	1	
		GASKETS & RUBBER COMPONENTS		
300	3744	Gasket, [T-35] (Bottom Pan) (Foreign) 1962-Up	1	211E7A191
300	3744**D** or **F**	Gasket, [T-35] (Bottom Pan) (Foreign) (Fiber) **(*Duraprene** or **Farpack)** 1962-Up	1	
300	3740	Gasket, [T-35] (Bottom Pan) (American) 1962-Up	1	
310	3823	Gasket, [T-35] (Front Pump) 1962-Up	1	3164869
311	3822	O-Ring, [T-35] (Front Pump)	1	3165004
334	3826	O-Ring, [T-35] (Forward Clutch Drum) (Inner) 1962-Up	1	
336	3831	Lip Seal, [T-35] (Direct Clutch) (Inner) (Foreign) 1962-Up (*And American Except 1970-71)	1	3165050
336	13926	Lip Seal, [T-35] (Direct Clutch) (Inner) (American) 1970-71	1	13305
337	3829	Lip Seal, [T-35] (Direct Clutch) (Outer) 1962-Up	1	
371	3291	O-Ring, [T-35] (Filler Tube)	1	
		HARD PARTS		
500	19901A	Pump, [T-35] (With 22 / 23-Splines) 1962-Up	1	
500	19901B	Pump, [T-35] (With 26-Splines) 1969-Up	1	
510	19902	Pump Body, [T-35] (With Gears) 1962-Up	1	
554	19220	Drum, [T-35] (Forward Clutch) (.800"ID Bore) (Without Oil Groove) 1962-66	1	
554	19220B	Drum, [T-35] (Forward Clutch) (.800"ID Bore) (With Oil Groove) 1967-69	1	
554	19220A	Drum, [T-35] (Forward Clutch) (.930"ID) 1969-Up	1	
555	19310	Drum, [T-35] (Direct Clutch With Sun Gear) (.850"ID Bushing) 1962-66 (1-3/4" Wide Band Surf)	1	
555	19310A	Drum, [T-35] (Direct Clutch With Sun Gear) (.850"ID Bushing) 1967-69 (2" Wide Band Surface)	1	
555	19310B	Drum, [T-35] (Direct Clutch With Sun Gear) (1.00"ID Bushing) L1969-Up (*Use With Flex Band)	1	
584	19325	Planet, [T-35] (1.850"OD) (Sun Gear on Shaft) 1962-66 (No ID Groove Next to Band Surface)	1	
584	19325A	Planet, [T-35] (1.950"OD) (Sun Gear on Shaft) 1966-Up (With 1-Groove Next to Band Surface)	1	
654	19317	Sprag, [T-35] (Planet) 1962-Up	1	3164843
670	19210	Input Shaft, [T-35] (22-Splines) 1962-66	1	
670	19210A	Input Shaft, [T-35] (23-Splines) 1967-Up	1	
670	19210B	Input Shaft, [T-35] (26-Splines) 1969-Up	1	
760	19123	Case, [T-35] (Water Cooled) 1969-Up	1	
760	19123A	Case, [T-35] (Air Cooled) (*Uses a Rear Pump) 1962-66	1	
741	29133-01K	End Plug Kit, [T-35] (Modulator Valve) (Plug & O-Ring) (In Valve Body)	1	Sonnax
912	19691	Piston, [T-35] (Rear Servo)	1	
964	19219A	Piston, [T-35] (Front Clutch) 1962--E69	1	
964	19219B	Piston, [T-35] (Front Clutch) 1962-E69 / L1969-72	1	
974	19218A	Spring, [T-35] (Front Clutch) (Belleville Spring) 1962-Up	1	

BW35TB/BW37TB

ILL#	PART#	DESCRIPTION	QTY	REF #
		OVERHAUL KITS		
	K19900F	Overhaul Kit, [BW35TB] (Saab) 1968-80	1	
	K19900G	Overhaul Kit, [BW37TB] (Saab 900) 1981-92 & (Saab 9000) 1981-85	1	
		MASTER L/STEEL KIT		
	DK1900F-S	Master L/Steels Kit, [BW35TB] (Saab) 1968-80	1	
	DK1900G-S	Master L/Steels Kit, [BW37TB] (Saab 900) 1981-92 & (Saab 9000) 1981-85	1	
		MASTER W/STEEL KIT		
	DK1900F	Master W/Steels Kit, [BW35TB] (Saab) 1968-80	1	
	DK1900G	Master W/Steels Kit, [BW37TB] (Saab 900) 1981-92 & (Saab 9000) 1981-85	1	
		FILTER		
010	19757	Filter, [BW35TB] 1968-80	1	9320052
010	19758	Filter, [BW37TB] 1981-93	1	7544125
		FILTER KIT		
	FK19757	Filter Kit, [BW35TB] 1968-80	1	
	FK19758	Filter Kit, [BW37TB] 1981-92	1	
		BANDS		
022	19313F	Band, [BW35TB / BW37TB] (Front) (Flex)	1	
024	19313D	Band, [BW35TB / BW37TB] (Rear)	1	
		BUSHINGS		
	K19902	Bushing Kit, [BW35TB / BE37TB]	1	
034	19003	Bushing, [BW35TB / BW37TB] (Pump Body)	1	
047	19005	Bushing, [BW35TB / BW37TB] (Input Shaft)	1	
048	19010	Bushing, [BW35TB / BW37TB] (Direct Drum & Planet to Sun Gear) (Rear)	2	
058	19008	Bushing, [BW35TB / BW37TB] (Planet to Center Support) (Front) (2.855”ID)	1	
062	19006	Bushing, [BW35TB / BW37TB] (Output Shaft to Planet) (1.260”ID)	1	
		METAL CLAD SEALS		
070	19605A	Seal, [BW35TB / BW37TB] (Pump Body)	1	
076	19679	Seal, [BW35TB] (Axle) (Both) 1981-84	2	
076	89155	Seal, [BW37TB] (Axle) (Both) 1985-Up	2	
		FRICTION CLUTCH		
106	19206A	Friction, [BW35TB / BW37TB] (Forward & Direct Clutch) (.061”)	8-9	
	K19100F	Friction Module, [BW35TB / BW37TB]	1	
		STEEL CLUTCH		
126	19205	Steel, [BW35TB] (Saab Forward Clutch) (.068”) (Flat)	3-4	3164873
128	19222	Steel, [BW35TB] (Direct Clutch) (.068”) (Dished)	4-5	3164863
128	19205A	Steel, [BW35TB] (Direct Clutch) (.090”) (Oversize)	1	
	K19110F	Steel Module, [BW35TB / BW37TB]	1	
		CLUTCH PRESSURE PLATES		
146	19304F	Pressure Plate, [BW35TB / BW37TB] (Direct Clutch) (Top)	1	
149	19213F	Pressure Plate, [BW35TB / BW37TB] (Forward Clutch) (Bottom)	1	

		OIL SEALING RINGS		
	K19903C	Ring Kit, [BW35TB / BW37TB]	1	
		GASKETS & RUBBER COMPONENTS		
300	3740F	Gasket, [BW35TB] (Bottom Pan) (Rear) 1968-80	1	8708455
300	3740G	Gasket, [BW37TB] (Bottom Pan) (Rear) 1981-89	1	9335456
300	3740H	Gasket, [BW37TB] (Bottom Pan) (Rear) 1990-92	1	4029450
300	3742F	Gasket, [BW35TB] (Bottom Pan) (Front) 1968-80	1	4027652
300	3742G	Gasket, [BW37TB] (Bottom Pan) (Front) 1981-89	1	9335423
300	3742H	Gasket, [BW37TB] (Bottom Pan) (Front) 1990-92	1	4029443
301	19504F	Gasket, [BW35TB / BW37TB] (Side Cover)	1	
302	19527F	Gasket, [BW35TB / BW37TB] (Transmission Case to Engine)	1	7514946
303	19502F	Gasket, [BW35TB / BW37TB] (Differential Cover)	1	
304	19169F	Gasket, [BW35TB / BW37TB] (Chain Cover)	1	
311	3822F	O-Ring, [BW35TB / BW37TB] (Pump)	1	
318	3824F	Gasket, [BW35TB / BW37TB] (Bell Housing to Case)	1	
371	3291	O-Ring, [BW35TB / BW37TB] (Filler Tube)	1	6264902
		HARD PARTS		
500	19901F	Pump, [BW35TB] 1968-80	1	
500	19901G	Pump, [BW37TB] 1981-92	1	
510	19902F	Pump Body W/Gears, [BW35TB] (Thin Gears) 1968-80	1	
510	19902G	Pump Body W/Gears, [BW37TB] (.750” Thick Gears) 1981-92	1	
520	19903F	Stator, [BW35TB] (Support) 1968-80	1	
520	19903G	Stator, [BW37TB] (Support) 1981-92	1	
		PUMP COMPONENTS		
544	19506F	Plate, [BW35TB] (Pump) 1968-80	1	
544	19506G	Plate, [BW37TB] (Pump) 1981-92	1	
		HARD PARTS (Continued)		
554	19220F	Drum, [BW35TB] (Forward Clutch) (Washer Type) 1968-80	1	
554	19220G	Drum, [BW37TB] (Forward Clutch) (Bearing Type) 1981-92	1	
555	19220FA	Drum, [BW35TB] (Direct Clutch) (Washer Type) 1968-80	1	
555	19220GA	Drum, [BW37TB] (Direct Clutch) (Bearing Type) 1981-92	1	
574	19212F	Clutch Hub, [BW35TB / BW37TB] (Forward Clutch)	1	
584	19325F	Planet, [BW35TB] 1968-80	1	
584	19325G	Planet, [BW37TB] 1981-92	1	
594	19501F	Ring Gear, [BW35TB] 1968-80	1	
594	19501G	Ring Gear, [BW37TB] 1981-92	1	
614	19312F	Sun Gear, [BW35TB] 1968-80	1	
614	19312G	Sun Gear, [BW37TB] 1981-92	1	
630	19316F	Center Support, [BW35TB / BW37TB] 1968-80	1	
630	19316G	Center Support, [BW37TB] 1981-92	1	
636	19406F	Center Plate, [BW35TB] 1968-80	1	
636	19406G	Center Plate, [BW37TB] 1981-92	1	

BW35TB/BW37TB

		SPRAGS & ONE WAY CLUTCHES		
654	19317	Sprag, [BW35TB / BW37TB]	1	
		HARD PARTS (Continued)		
670	19210F	Input Shaft, [BW35TB] (2-Ring) 1968-80	1	
670	19210G	Input Shaft, [BW37TB] (3-Ring) 1981-92	1	
673	19405F	Turbine Shaft, [BW35TB / BW37TB]	1	
678	19502F	Output Shaft, [BW35TB] (No Rings)	1	
678	19502G	Output Shaft, [BW37TB] (With 3-Rings)	1	
680	19600F	Governor, [BW35TB] 1968-80	1	
680	19600G	Governor, [BW37TB] 1981-92	1	
700	19820	Chain, [BW35TB] 1968-84	1	
705	19404J	Sprocket, [BW35TB / BW37TB] (Drive) (40 Teeth)	1	
705	19404I	Sprocket, [BW35TB / BW37TB] (Drive) (39 Teeth)	1	
706	19404H	Sprocket, [BW35TB / BW37TB] (Drive) (38 Teeth)	1	
706	19404F	Sprocket, [BW35TB / BW37TB] (Drive) (35 Teeth)	1	
706	19404G	Sprocket, [BW35TB / BW37TB] (Drive) (37 Teeth)	1	
716	19992F	Differential Housing, [BW35TB / BW37TB] **(*Year Model) (*Height)**	1	
720	19190F	Ring Gear, [BW35TB / BW37TB] **(*Year Model) (*# of Teeth)**	1	
730	19196F	Pinion, [BW35TB / BW37TB] **(*Year Model) (*# of Teeth)**	1	
735	19990F	Housing, [BW35TB] (Pinion) (Cast Iron) 1968-80	1	
735	19990G	Housing, [BW37TB] (Pinion) (Aluminum) 1981-92	1	
740	19133F	Valve Body, [BW35TB] 1968-80	1	
740	19133G	Valve Body, [BW37TB] 1981-92	1	
750	19102F	Bell Housing, [BW35TB] 1968-80	1	
750	19102G	Bell Housing, [BW37TB] 1981-84	1	
750	19102H	Bell Housing, [BW37TB] 1985-92	1	
755	19403F	Cover, [BW35TB] (Sprocket) 1968-80	1	
755	19403G	Cover, [BW37TB] (Sprocket) 1981-92	1	
760	19100F	Case, [BW35TB / BW37TB] **(*Year, *Model, *Cast #)**	1	
905	19610F	Servo Assembly, [BW35TB / BW37TB] (Front)	1	
910	19690F	Servo Assembly, [BW35TB / BW37TB] (Rear)	1	
925	19691F	Accumulator Assembly, [BW35TB / BW37TB]	1	
964	19219F	Piston, [BW35TB / BW37TB] (Forward Clutch)	1	
965	19308F	Piston, [BW35TB / BW37TB] (Direct Clutch)	1	
974	19218F	Spring, [BW35TB / BW37TB] (Forward Disc Spring) (.075”)	1	4486217
975	19307F	Spring, [BW35TB / BW37TB] (Direct Clutch Return)	1	

NOTES

BW T-65/BW T-66

RWD 3 Speed

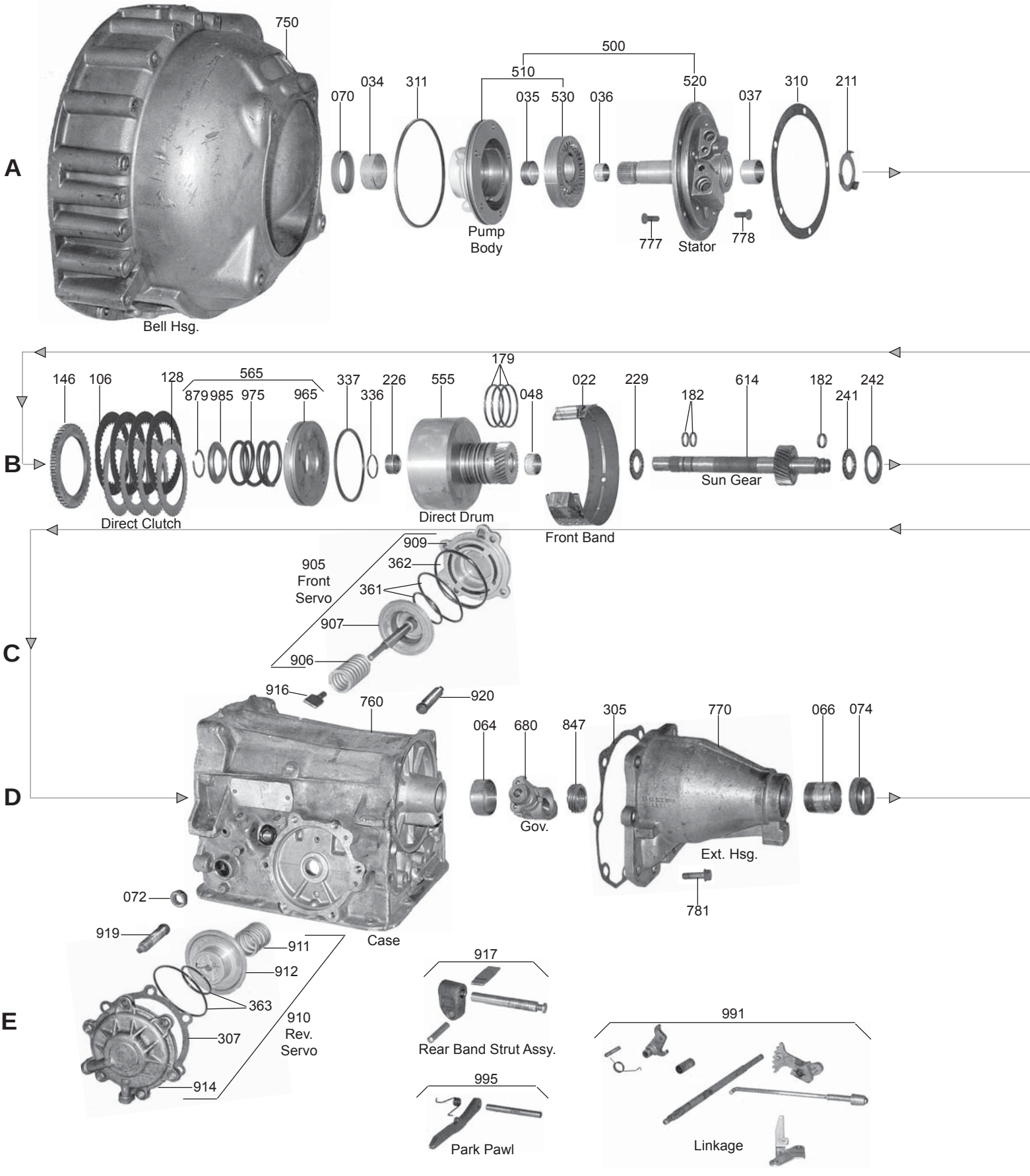

RWD 3 Speed

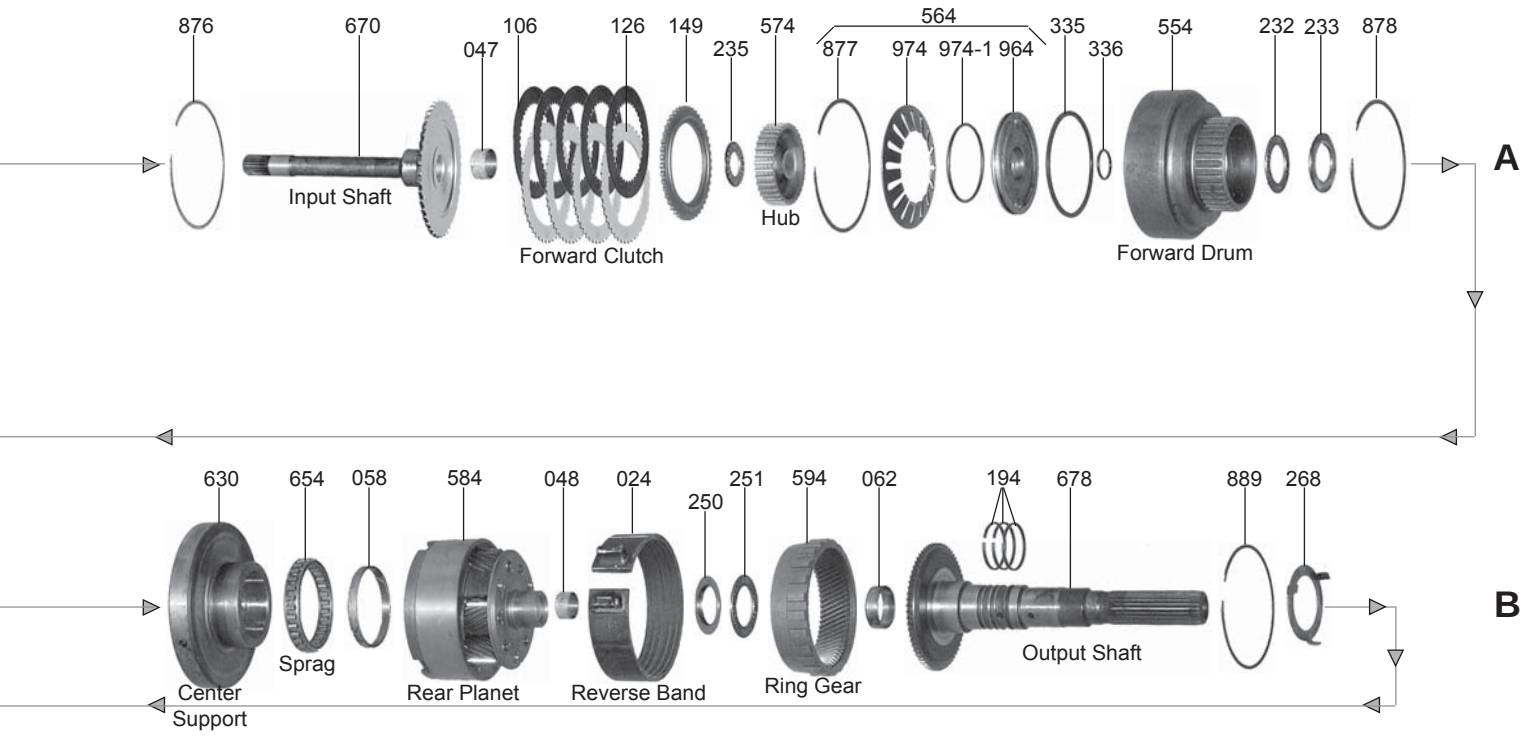
876
670
047
106
126
149
235
574
564
877
974
974-1
964
335
336
554
232
233
878
Input Shaft
Forward Clutch
Hub
Forward Drum
A
630
654
058
584
048
024
250
251
594
062
194
678
889
268
Sprag
Center Support
Rear Planet
Reverse Band
Ring Gear
Output Shaft
B
C
841
287
798
Yoke
D
740
741
V.B. Parts
Valve Body
495
326
010
999
Oil Tubes
300
765
779
E

BW T-65/BW T-66

ILL#	PART#	DESCRIPTION	QTY	REF #
		OVERHAUL KITS		
	K19900J	Overhaul Kit, [T-65 / T-66] 1971-Up	1	
		MASTER L/STEEL KIT		
	DK1900J-S	Master L/Steels Kit, [T-65 / T-66] 1971-Up	1	
		MASTER W/STEEL KIT		
	DK1900J	Master W/Steels Kit, [T-65 / T-66] 1971-Up	1	
		FILTER		
010	19757	Filter, [T-65 / T-66] 1971-Up	1	3188896
		FILTER KIT		
	FK19757B	Filter Kit, [T-65 / T-66] 1971-Up	1	
		BANDS		
022	19313F	Band, [T-65 / T-66] (Front) (Flex)	1	
024	19313D	Band, [T-65 / T-66] (Rear)	1	
		BUSHINGS		
	K19902	Bushing Kit, [T-65 / T-66]	1	
034	19003	Bushing, [T-65 / T-66] (Pump Body)	1	
035	19012	Bushing, [T-65 / T-66] (Inner Pump Gear)	1	
036	19011	Bushing, [T-65] (Stator) (Front) (23-Spline Input Shaft)	1	
036	19011A	Bushing, [T-65] (Stator) (Front) (26-Spline Input Shaft)	1	
037	19009	Bushing, [T-65 / T-66] (Stator) (Rear)	1	
047	19005	Bushing, [T-65 / T-66] (Input Shaft)	1	
048	19010	Bushing, [T-65 / T-66] (Sun Gear & Planet) (Rear)	2	
058	19008	Bushing, [T-65 / T-66] (Planet) (Front, Large)	1	
062	19006	Bushing, [T-65 / T-66] (Output Shaft)	1	
064	19001	Bushing, [T-65 / T-66] (Case)	1	
066	19002X	Bushing, [T-65 / T-66] (Extension Housing) (1.510”OD) (1.380”ID) (1.210” Long) (Babbit)	1	
		METAL CLAD SEALS		
070	19605	Seal, [T-65 / T-66] (Front) (*Except BMW)	1	3183886
070	19605A	Seal, [T-65 / T-66] (Front) (BMW) 1973-Up	1	046-504-4001
072	19675A	Seal, [T-65 / T-66] (Linkage)	1	
074	19657	Seal, [T-65 / T-66] (Rear) (Jaguar & Range Rover) (36 x 49.5 x 11mm)	1	
074	19657D	Seal, [T-65 / T-66] (Rear) (BMW)	1	
		FRICTION CLUTCH		
106	19206A	Friction, [T-65 / T-66] (Front & Rear Clutch) (.061”) 1971-Up	8-10	
		STEEL CLUTCH		
126	19205	Steel, [T-65 / T-66] (Forward Clutch) (.068”) (Flat)	3-4	3164873
128	19222	Steel, [T-65 / T-66] (Direct Clutch) (.068”) (Dished)	4-5	3164863
128	19205A	Steel, [T-65 / T-66] (Direct Clutch) (.091”) (Flat) (Oversized)	AR	
		CLUTCH PRESSURE PLATES		
146	19304	Pressure Plate, [T-65 / T-66] (Direct Clutch) (Top)	1	
149	19213A	Pressure Plate, [T-65 / T-66] (Forward Clutch) (Bottom)	1	

		OIL SEALING RINGS		
	K19903B	Ring Kit, [T-65 / T-66] 1971-Up	1	
		WASHERS & BEARINGS		
211	19208	Washer, [T-65 / T-66] (Stator to Input Shaft) (.062")	1	
211	19208A	Washer, [T-65 / T-66] (Stator to Input Shaft) (.079")	1	
226	19309	Bearing, [T-65 / T-66] (Direct Drum) (Inner)	1	
229	19311A	Bearing, [T-65 / T-66] (Direct Drum to Sun Gear)	1	
232	19223A	Washer, [T-65 / T-66] (Forward Drum to Direct Drum) (Bronze)	1	
233	19224A	Washer, [T-65 / T-66] (Forward Drum to Direct Drum) (Steel)	1	
235	19211	Washer, [T-65 / T-66] (Input Shaft to Forward Clutch Hub)	1	3165043
241	19311A	Bearing, [T-65 / T-66] (Sun Gear to Planet)	1	
242	19314A	Race, [T-65 / T-66] (Sun Gear to Planet) (With 3-Flat Sides)	1	
250	19315	Race, [T-65 / T-66] (Planet to Output Shaft)	1	
251	19322A	Bearing, [T-65 / T-66] (Planet to Output Shaft)	1	
268	19316	Washer, [T-65 / T-66] (Output Shaft to Case)	1	
		GASKETS & RUBBER COMPONENTS		
300	3740A	Gasket, [T-65 / T-66] (Pan) (Cork)	1	04650-45008V
310	3824	Gasket, [T-65 / T-66] (Pump)	1	
		HARD PARTS		
500	29901A	Pump, [T-65] (Jaguar) (With 23-Spline Input Shaft)	1	
500	29901C	Pump, [T-66] (Jaguar) (With 26-Spline Input Shaft)	1	
500	29901B	Pump, [T-65] (BMW)	1	
510	29902B	Pump Body W/Gears, [T-65 / T-66]	1	
520	29903A	Stator, [T-65] (Jaguar) (With 23-Spline Input Shaft)	1	
520	29903C	Stator, [T-66] (Jaguar) (With 26-Spline Input Shaft)	1	
520	29903B	Stator, [T-65] (BMW)	1	
554	29220B	Drum, [T-65 / T-66] (Forward Clutch)	1	
555	29310A	Drum, [T-65 / T-66] (Direct Clutch With Sun Gear)	1	
574	29212	Clutch Hub, [T-65 / T-66] (Forward Clutch)	1	
584	29325A	Planet, [T-65 / T-66] (Jaguar) (Race # 242 Has 3-Flat Sides) (*For Planet With Round Race)	1	
594	29501C	Ring Gear, [T-65 / T-66] (Planet)	1	
614	29312A	Sun Gear, [T-65 / T-66] (Jaguar)	1	
630	29316A	Center Support, [T-65 / T-66]	1	
		SPRAGS & ONE WAY CLUTCHES		
654	19317A	Sprag, [T-65 / T-66]	1	
		HARD PARTS (Continued)		
670	29210A	Input Shaft, [T-65 / T-66] (23-Spline) (Jaguar)	1	
670	29210C	Input Shaft, [T-65 / T-66] (26-Spline) (Jaguar)	1	
678	29502A	Output Shaft, [T-65 / T-66] (25-Spline) (8-15/16" Long) (Jaguar)	1	
678	29502B	Output Shaft, [T-65 / T-66] (25-Spline) (9-15/16" Long) (Jaguar)	1	
680	29600	Governor, [T-65 / T-66]	1	
740	29133A	Valve Body, [T-65 / T-66] (Jaguar)	1	

BW T-65/BW T-66

		VALVE BODY COMPONENTS		
741	29133-01K	End Plug Kit, [T-65 / T-66] (Modulator Valve) (Plug & O-Ring) (In Valve Body)	1	Sonnax
		HARD PARTS (Continued)		
750	29102A	Bell Housing, [T-65 / T-66] (Jaguar)	1	
760	29100A	Case, [T-65 / T-66] (Jaguar)	1	
770	29602	Extension Housing, [T-65 / T-66] (Jaguar)	1	
798	29951B	Bolt, [T-65 / T-66] (Holds Yoke to Output Shaft) (Jaguar)	1	
841	29951	Yoke, [T-65 / T-66] (Output Shaft) (Jaguar)	1	
847	29227	Gear, [T-65 / T-66] (Speed-O Drive)	1	
905	29610A	Servo Assembly, [T-65 / T-66] (Front) (Jaguar)	1	
910	29690A	Servo Assembly, [T-65 / T-66] (Rear) (Jaguar)	1	
916	29689	Strut, [T-65 / T-66] (Front Band)	1	
917	K29689	Strut Assembly, [T-65 / T-66] (Rear Band)	1	
919	29689A	Strut, [T-65 / T-66] (Rear Band Apply)	1	
920	29689B	Bolt, [T-65 / T-66] (Rear Band Adjusting)	1	
964	29219A	Piston, [T-65 / T-66] (Forward Clutch) (Jaguar)	1	
965	29308A	Piston, [T-65 / T-66] (Direct Clutch)	1	
974	19218A	Spring, [T-65 / T-66] (Forward Clutch Disc Spring) (.075”)	1	4486217
975	19307	Spring, [T-65 / T-66] (Direct Clutch Return)	1	
991	K29676	Linkage Assembly, [T-65 / T-66] (Internal) (Jaguar)	1	
995	K29678	Park Pawl Assembly, [T-65 / T-66] (Jaguar)	1	

NOTES

MAZDA/FORD (2-PAN) [G4A/GF4A-EL/4EAT-G]

FWD 4 Speed (2 Pans)

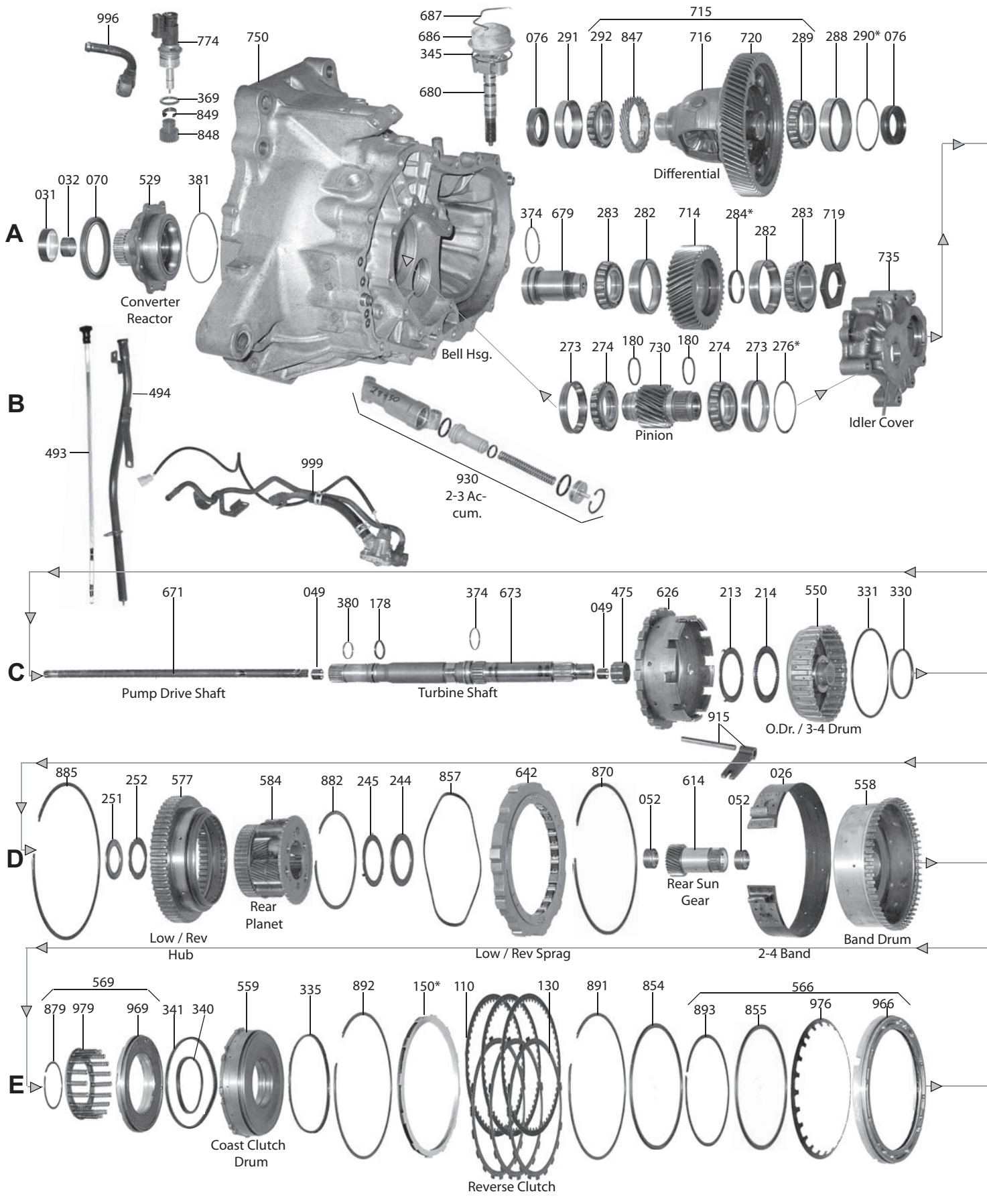

MAZDA/FORD (2-PAN) [G4A/GF4A-EL/4EAT-G]

FWD 4 Speed (2 Pans)

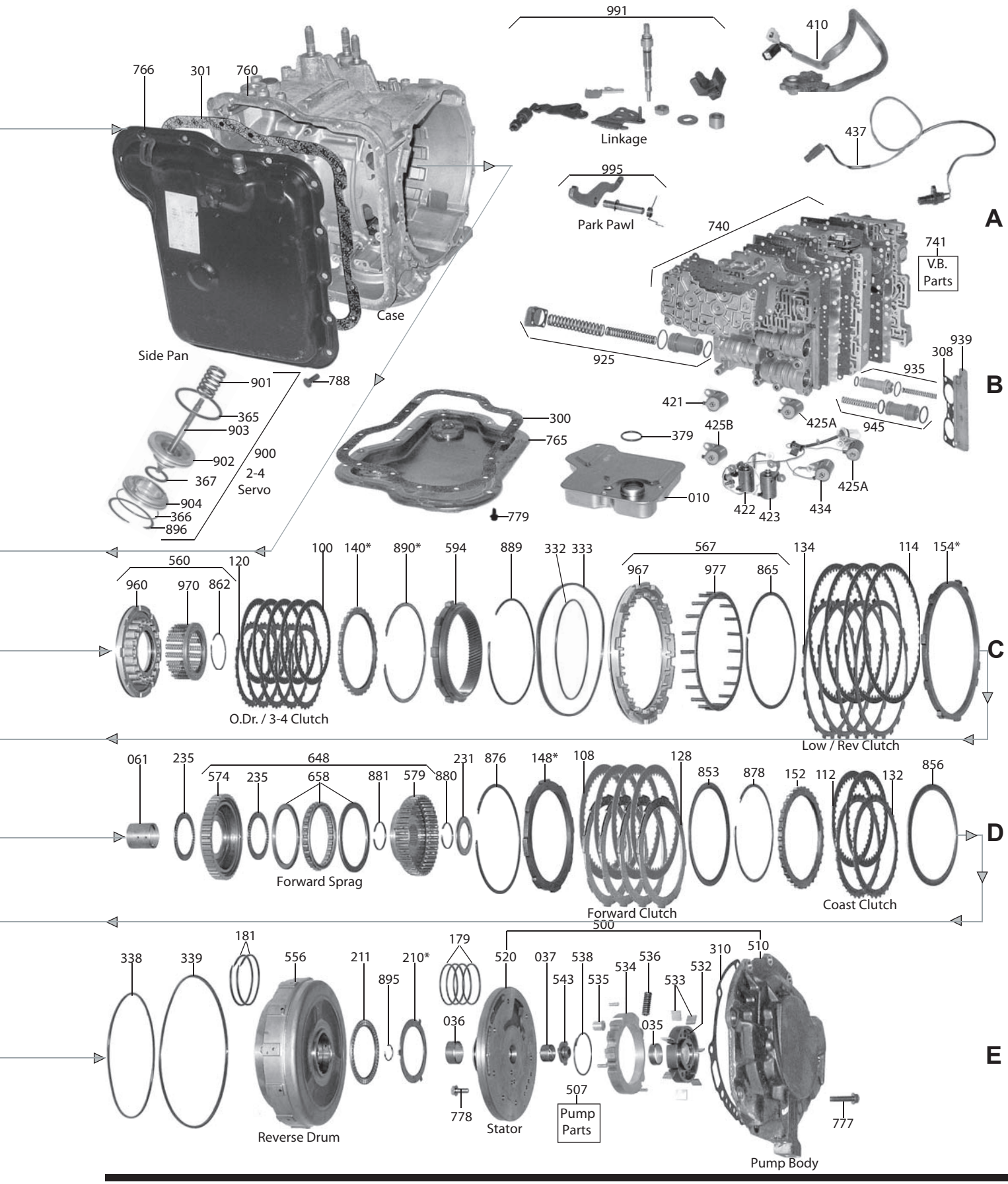

MAZDA/FORD (2-PAN) [G4A/GF4A-EL/4EAT-G]

ILL#	PART#	DESCRIPTION	QTY	REF #
		OVERHAUL KITS		
	K71900	Overhaul Kit, [GF4A-EL / G4A-HL] (Mazda / Probe) 1986-92	1	
	K71900B	Overhaul Kit, [GF4A-EL] (7-Solenoid) {*Mazda / Probe 1993-Up}, {*Fits Mazda 626 & MX6 1993 (All) & 1991-2000 With 2.5L}, {*2.5L Millenia 12/1993-2002}, {*MPV 2000}, {*Also Probe 1993 (All) & 1994-97 With 2.5L and 2.0L}	1	
		MASTER L/STEEL KIT		
	DK7100-S	Master L/Steels Kit, [G4A] (Mazda / Probe) (Without Turbo) 1986-4/1987	1	
	DK7100A-S	Master L/Steels Kit, [G4A] (Mazda / Probe) (With & Without Turbo) 5/1987-92	1	
	DK7100C-S	Master L/Steels Kit, [GF4A-EL] (Mazda / Probe) 1993-00	1	
	DK7100E-S	Master L/Steels Kit, [GF4A-EL] (Mazda / Probe) 2001-Up	1	
		MASTER W/STEEL KIT		
	DK7100	Master W/Steels Kit, [G4A] (Mazda / Probe) (Without Turbo) 1986-4/1987	1	
	DK7100A	Master W/Steels Kit, [G4A] (Mazda / Probe) (With & Without Turbo) 5/1987-92	1	
	DK7100C	Master W/Steels Kit, [GF4A-EL] (Mazda / Probe) 1993-00 (*Except Models Listed Below) (With .130" 3.4 Steels)	1	
	DK7100D	Master W/Steels Kit, [GF4A-EL] {Mazda / Probe (6Cyl) 1993-97}, {Mazda/ 626 /1993}, {MX6 /1993}, {Capri/ 1991-94}, (With .091" 3.4 Steels)	1	
	DK7100E	Master W/Steels Kit, [GF4A-EL] 2001-Up	1	
		FILTER		
010	71710	Filter, [G4A] (Mazda 626 / MX6 & Probe) (Non Turbo) (4-Bolt) (5/8" Thick) 1986-87	1	FU01-210500E
010	71710A	Filter, [G4A / GF4A-EL] (Mazda 626 / MX6) (3-Bolt) (1" Thick) 1988-92	1	FU31-21-500
010	71710B	Filter, [G4A] (Mazda 323), (Protege, Capri 1991-94) (3-Bolt) (1-1/2" Thick) 1988-92	1	FU50-21-500A
010	71710D	Filter, [GF4A-EL] (Mazda 626 / MX6 & Probe) (3-Bolt) (Plastic) (With 1-1/2" Pick-Up) 1993-Up	1	F32Z-7A098-A
		FILTER KIT		
	FK71710	Filter Kit, [G4A] (Mazda 626 / MX6 & Probe) (Non Turbo) (4-Bolt) (5/8" Thick) 1986-87	1	
	FK71710A	Filter Kit, [G4A / GF4A-EL] (Mazda 626 / MX6) (3-Bolt) (1" Thick) 1988-92	1	
	FK71710B	Filter Kit, [G4A] (Mazda 323), (Protege, Capri 1991-94) (3-Bolt) (1-1/2" Thick) 1988-92	1	
	FK71710D	Filter Kit, [GF4A-EL] (Mazda 626 / MX6 & Probe) (3-Bolt) (Plastic) (With 1-1/2" Pick-Up) 1993-Up	1	
		MISC. FILTERS		
	71711	Filter, [G4A] (Thimble Filter In Valve Body) 1986-92	4	FU01-21-296A
	71711A	Filter, [GF4A-EL] (Thimble Filter In Valve Body) 1993-Up	9	FU19-21-296A
		BANDS		
026	71700A	Band, [G4A] (Non Turbo) (1-1/2" Wide) 1986-Up	1	FU08-21-310A
026	71700B	Band, [G4A] (With Turbo) (1-3/4" Wide) 1987-Up	1	FU32-21-310B
		BUSHINGS		
	K71000	Bushing Kit, [G4A] (Non-Turbo) 1986-Up	1	
	K71000A	Bushing Kit, [G4A] (Turbo) 1986-Up	1	
031	71002	Bushing, [G4A] (Converter Hub) (57.1mm) 1988-Up	1	
031	71002A	Bushing, [G4A] (Converter Hub) (61.1mm) 1986-87	1	
032	71007A	Bushing, [G4A] (Converter Reactor (Small) to Turbine Shaft) (.904"OD)	1	
032	71007	Bushing, [G4A] (Converter Reactor (Small) to Turbine Shaft) (1.092"OD)	1	
036	71005	Bushing, [G4A] (Pump Cover) (Rear) (1.26"OD)	1	
037	71006	Bushing, [G4A] (Pump Cover) (Front) (.83"OD)	1	
052	71003	Bushing, [G4A] (Sun Gear) (Without Oil Holes) (Gear Side) 1986-Up	1	

MAZDA/FORD (2-PAN) [G4A/GF4A-EL/4EAT-G]

052	71004	Bushing, [G4A] (Sun Gear) (With Oil Holes) (Spline Side) 1986-Up	1	
061	71001	Bushing, [G4A] (Band Drum) or (Sun Gear Shell) (1-3/8" Long) (Non Turbo)	1	
061	71001A	Bushing, [G4A] (Band Drum) or (Sun Gear Shell) (1-5/8" Long) (Turbo)	1	
		METAL CLAD SEALS		
070	71151	Seal, [G4A] (Front) (Narrow) 1986-Up	1	
070	71151A	Seal, [G4A] (Front) (Wide) 1986-Up (*Wider Seal to Prevent Seal Blow Out)	1	
076	42152	Seal, [G4A] (Axle) (Both Sides) (.395" Thick) 1986-Up	2	FU03-27-238
	71991	Retainer, [G4A] (Front Seal) (3-Bolt) (Metal) (*Prevents Seal Blow Out)	1	
		FRICTION CLUTCH		
100	71104A	Friction, [GF4A-EL] (3-4 Clutch) (.063") (4.65"OD) (50 Teeth) (Smooth) 1993-Up	4-5	FU08-19-370
100	71104	Friction, [G4A] (3-4 Clutch) (.063") (4.65"OD) (50 Teeth) (Grooved) 1986-93 (*Will Retro 1993-Up)	4-5	
108	71101	Friction, [G4A] (Forward Clutch) (.063") (5.70"OD) (48 Teeth) 1986-Up	3-4	FU08-19-580
110	71103	Friction, [G4A] (Reverse Clutch) (V-Tooth) (.063") (7.70"OD) (58 Teeth) 1986-87	2-3	FU01-19-460
110	71103A	Friction, [G4A] (Reverse Clutch) (Square Tooth) (.063") (7.70"OD) (58 Teeth) 1988-00	2-3	FU50-19-4F0
110	71103B	Friction, [GF4A-EL] (Reverse Clutch) (Square Tooth) (.063") (32 Teeth) (7.720"OD) (Hi-Energy) 2001-Up	2-3	
112	71102	Friction, [G4A] (Coast Clutch) (V-Tooth) (.061") (5.150"OD) (44 Teeth) 1986-87	2	FU08-19-590
112	71102A	Friction, [G4A] (Coast Clutch) (Square Tooth) (.061") (5.150"OD) (44 Teeth) 1988-Up	2	FU50-19-590
114	71103	Friction, [G4A] (Low / Reverse Clutch) (V-Tooth) (.063") (7.70"OD) (58 Teeth) 1986-87 (*Also Fits Reverse Clutch)	2-3	FU01-19-460
114	71103A	Friction, [G4A] (Low / Reverse Clutch) (Square Tooth) (.063") (7.70"OD) (58 Teeth) 88-Up (*Also Fits Reverse Clutch)	4-5	FU50-19-4F0
	K71100	Friction Module, [G4A] 1986-87	1	
	K71100A	Friction Module, [G4A] (Non Turbo) 1988-Up	1	
	K71100C	Friction Module, [G4A] (Mazda / Ford) 1993-Up	1	
		STEEL CLUTCH		
120	71114	Steel, [G4A] (3-4 Clutch) (.063") (4.0"ID) (16 Teeth) 1986-87	5	FU01-19-334
120	71114A	Steel, [G4A] (3-4 Clutch) (.063") (4.0"ID) (30 Teeth) 1988-92	5	FU50-19-334
120	71114B	Steel, [G4A] (3-4 Clutch) (.091") (4.0"ID) (30 Teeth) 1988-Up	5	FU32-19-334
120	71114C	Steel, [GF4A-EL] (3-4 Clutch) (.130") (4.0"ID) (30 Teeth) 1993-Up	4	FU9D-19-334
128	71111	Steel, [G4A] (Forward Clutch) (.063") (4.8"ID) (8 Teeth) 1986-92	3-4	FU01-19-571
128	71111A	Steel, [GF4A-EL] (Forward Clutch) (.063") (4.8"ID) (32 Teeth) 1993-Up	3	FU9A-19-571A
130	71113	Steel, [G4A] (Reverse Clutch) (.063") (7.1"ID) (12 Teeth) 1986-92	2	FU50-19-561
130	71113A	Steel, [GF4A-EL] (Reverse Clutch) (.063") (7.1"ID) (32 Teeth) 1993-Up	2	FU9A-19-561
132	71112	Steel, [G4A] (Coast Clutch) (.063") (4.45"ID) (32 Teeth) 1986-Up	2-3	FU01-19-621
134	71115	Steel, [G4A] (Low / Reverse Clutch) (.063") (7.1"ID) (15 Teeth) 1986-Up	3-5	FU01-19-451A
		CLUTCH PRESSURE PLATES		
140	71718	Pressure Plate, [G4A] (3-4 Clutch) (3.8mm) (16 Teeth) 1986-87	1	
140	71719	Pressure Plate, [G4A] (3-4 Clutch) (3.8mm) (30 Teeth) 1988-Up	1	E92Z-7B066-AE
140	71725A	Pressure Plate, [G4A] (3-4 Clutch) (4.0mm) (30 Teeth) 1988-Up	1	E92Z-7B066-T
140	71719A	Pressure Plate, [G4A] (3-4 Clutch) (4.2mm) (30 Teeth) 1988-Up	1	E92Z-7B066-U
140	71725C	Pressure Plate, [G4A] (3-4 Clutch) (4.4mm) (30 Teeth) 1988-Up	1	E92Z-7B066-V
140	71725D	Pressure Plate, [G4A] (3-4 Clutch) (4.6mm) (30 Teeth) 1988-Up	1	E92Z-7B066-W
140	71725E	Pressure Plate, [G4A] (3-4 Clutch) (4.8mm) (30 Teeth) 1988-Up	1	E92Z-7B066-X
148	71714	Pressure Plate, [G4A] (Forward Clutch) (8 Teeth) (*Looks Like 16 Teeth) 1986-92 **(*Specify Thickness .206" to .264")**	1	
148	71714F	Pressure Plate, [GF4A-EL] (Forward Clutch) (32 Teeth) 1993-Up **(*Specify Thickness .232" to .264")**	1	

MAZDA/FORD (2-PAN) [G4A/GF4A-EL/4EAT-G]

150	71716	Pressure Plate, [G4A] (Reverse Clutch) (12 Teeth) 1986-92 **(*Specify Thickness .241" to .306")**	1	E92Z-7B066-N
150	71717	Pressure Plate, [GF4A-EL] (Reverse Clutch) (32 Teeth) 1993-Up **(*Specify Thickness .258" to .306")**	1	
152	71715	Pressure Plate, [G4A] (Coast Clutch) (32 Teeth) 1986-Up **(*Specify Thickness .181" to .220")**	1	E92Z-7B066-G
154	71721	Pressure Plate, [G4A] (Low / Reverse Clutch) (10.2mm) (15 Teeth) 1986-87	1	E92Z-7B066-Y
154	71723	Pressure Plate, [G4A] (Low / Reverse Clutch) (10.4mm) (15 Teeth) 1988-Up	1	E92Z-7B066-Z
154	71722	Pressure Plate, [G4A] (Low / Reverse Clutch) (7.20mm) (15 Teeth) 1988-Up	1	
154	71722A	Pressure Plate, [G4A] (Low / Reverse Clutch) (7.40mm) (15 Teeth) 1988-Up	1	E92Z-7B066-AA
154	71722B	Pressure Plate, [G4A] (Low / Reverse Clutch) (7.60mm) (15 Teeth) 1988-Up	1	E92Z-7B066-AB
154	71722C	Pressure Plate, [G4A] (Low / Reverse Clutch) (7.80mm) (15 Teeth) 1988-Up	1	E92Z-7B066-AC
154	71722D	Pressure Plate, [G4A] (Low / Reverse Clutch) (6.80mm) (15 Teeth) 1988-Up	1	E92Z-7B066-AD
		VALVE BODY KITS		
	K71908	Shift Kit, [GF4A-EL / G4A-HL] (1 & 4 Solenoids) 1986-92	1	Transgo
	K71908A	Shift Kit, [GF4A-EL] (7-Solenoids) 1993-97	1	Transgo
		OIL SEALING RINGS		
	K71901M	Ring Kit, [G4A] (Metal) 1986-Up	1	
	K71901T	Ring Kit, [G4A] (Teflon) 1986-Up	1	
	K71901AT	Ring Kit, [G4A] (Rotating Rings Only*) (Contains: 4-71300 & 2-71302) (Metal) 1986-Up	1	
178	71544	Ring, [G4A] (Turbine Shaft) 1986-87	1	
178	71303T	Ring, [G4A] (Turbine Shaft) 1988-Up	1	
179	71300	Ring, [G4A] (Stator Shaft) (Metal) 1986-Up	4	
179	71300T	Ring, [G4A] (Stator Shaft) (Teflon) 1986-Up	4	
180	71302	Ring, [G4A] (Output Gear Shaft) (Metal) 1986-Up	2	
180	71302T	Ring, [G4A] (Output Gear Shaft) (Teflon) 1986-Up	2	
181	71301T	Ring, [G4A] (Forward Clutch) (Inner) 1986-Up	2	
	71304T	Ring, [G4A] (2-3 Accumulator Piston) (Small) (Teflon) 1986-E90	1	
	71304AT	Ring, [G4A] (2-3 Accumulator Piston) (Small) (Teflon) L1990-Up	1	
	71306T	Ring, [G4A] (2-3 Accumulator Piston) (Teflon) 1986-E90	1	
	71306AT	Ring, [G4A] (2-3 Accumulator Piston) (Teflon) L1990-Up	1	
	71309T	Ring, [G4A] (2-3 Accumulator Piston) (Large) (Teflon) 1986-E90	1	
	71309AT	Ring, [G4A] (2-3 Accumulator Piston) (Large) (Teflon) L1990-Up	1	
		WASHERS & BEARINGS		
210	71400E	Race, [G4A] (Stator to Reverse Drum) (1.2mm) (3-Tab) (.047") 1986-92	1	E92Z-7D014-A
210	71400F	Race, [G4A] (Stator to Reverse Drum) (1.4mm) (3-Tab) (.055") 1986-92	1	E92Z-7D014-E
210	71400A	Race, [G4A] (Stator to Reverse Drum) (1.6mm) (3-Tab) (.063") 1986-92	1	E92Z-7D014-F
210	71400B	Race, [G4A] (Stator to Reverse Drum) (1.8mm) (3-Tab) (.070") 1986-92	1	E92Z-7D014-B
210	71400C	Race, [G4A] (Stator to Reverse Drum) (2.0mm) (3-Tab) (.078") 1986-92	1	E92Z-7D014-B
210	71400D	Race, [G4A] (Stator to Reverse Drum) (2.2mm) (3-Tab) (.086") 1986-92	1	E92Z-7D014-D
210	71401E	Race, [GF4A-EL] (Stator to Reverse Drum) (1.2mm) (1-Tab) (.047") 1993-Up	1	E92Z-7D014-D
210	71401F	Race, [GF4A-EL] (Stator to Reverse Drum) (1.4mm) (1-Tab) (.055") 1993-Up	1	
210	71401A	Race, [GF4A-EL] (Stator to Reverse Drum) (1.6mm) (1-Tab) (.063") 1993-Up	1	
210	71401B	Race, [GF4A-EL] (Stator to Reverse Drum) (1.8mm) (1-Tab) (.070") 1993-Up	1	
210	71401C	Race, [GF4A-EL] (Stator to Reverse Drum) (2.0mm) (1-Tab) (.078") 1993-Up	1	
210	71401D	Race, [GF4A-EL] (Stator to Reverse Drum) (2.2mm) (1-Tab) (.086") 1993-Up	1	
211	71424	Bearing W/Race, [G4A] (Stator to Reverse Drum) 1986-Up	1	
	71400-15	Shim Kit, [G4A] (Stator to Reverse Drum) (.015") (5 Per Kit)	1	Sonnax

MAZDA/FORD (2-PAN) [G4A/GF4A-EL/4EAT-G]

213	71410	Race, [G4A] (Shell to 3-4 Drum Clutch Drum) 1986-Up	1	E92Z-7D423-A
214	71412	Bearing W/Race, [G4A] (Shell to 3-4 Clutch Drum) 1986-Up	1	E92Z-7F404-A
231	71420	Bearing W/Race, [G4A] (Reverse Drum to Hub) 1986-Up	1	E92Z-7D234-A
235	71422	Bearing, [G4A] (Drum With Sun Gear to Forward Clutch Hub) (*Also Forward Clutch Hub to Coast Clutch Hub) 1986-Up	2	E92Z-7A623-A
244	71419	Bearing, [G4A] (Planet to Sun Gear Drum) 1986-Up	1	E92Z-7F241-A
245	71410	Race, [G4A] (Planet to Sun Gear Drum) 1986-Up	1	E92Z-7F868-A
251	71420	Bearing W/Race, [G4A] (3-4 Drum to Planet) 1986-Up	1	
252	71411	Race, [G4A] (3-4 Drum to Planet) 1986-Up	1	
283	71975B	Cone Bearing, [G4A] (Idler Gear) 1986-Up	2	E92Z-7F453-A
289 292	71426	Bearing/Race Kit, [G4A] (Differential) (Both Sides) (1.575"ID) (*Fits 21 & 22-Rollers)	1-2	
		GASKETS & RUBBER COMPONENTS		
300	71500	Gasket, [G4A] (Bottom Pan) (Non Turbo)	1	
300	71500A	Gasket, [G4A] (Bottom Pan) (With Turbo)	1	
301	71502	Gasket, [G4A] (Side Pan) (Non Turbo)	1	
301	71502A	Gasket, [G4A] (Side Pan) (With Turbo)	1	
310	71501	Gasket, [G4A] (Pump)	1	
379	71503	O-Ring, [G4A] (Filter)	1	
	K71900-4	Accumulator O-Ring Kit, [G4A] 1986-89	1	
	K71900-4D	Accumulator "D" Ring Kit, [G4A] 1990-Up	1	
		TECHNICAL MANUALS		
	TMG4AEL	Technical Manual, [G4A] (Mazda) [G4A-EL]	1	ATSG
	TMG4AHL	Technical Manual, [G4A] (Mazda) [G4A-HL]	1	ATSG
	TMGF4EAT	Technical Manual, [GF4A-EL] (Mazda / Probe)	1	ATSG
		ELECTRICAL COMPONENTS		
410	71990	Switch, [G4A] (Inhibitor Switch) (Probe) 1989-90	1	
410	71990A	Switch, [G4A] (MX6 / 626) (Inhibitor Switch) 1988-92	1	
410	71990B	Switch, [G4A] (323) (Inhibitor Switch) 1988-89	1	
410	71990C	Switch, [G4A] (Protégé) (Inhibitor Switch) 1990-92	1	
410	71990D	Switch, [GF4A-EL] (All) (Inhibitor Switch) 1993-97	1	
	K71954	Solenoid Assembly, [G4A] (With 4-Solenoids) 1986-93	1	
	K71955	Solenoid Assembly, [GF4A-EL] (1-2, 2-3, 3-4 Shift, Lock-Up, EPC, Lock-Up Control, 3-2 Shift) (7-Solenoids)	1	
421	71956	Solenoid, [GF4A-EL] (1-2 Shift) 1993-Up	1	FU9A-21-1F1D
422	71958	Solenoid, [GF4A-EL] (2-3 Shift) 1993-Up	1	FU9A-21-1F4D
423	71959	Solenoid, [GF4A-EL] (3-4 Shift) 1993-Up	1	FU9A-21-1F3D
425	71995	Solenoid, [G4A] (Lock-Up) (*With Wire Harness) 1986-93	1	FU9A-21-1G1C
425	71925	Solenoid, [GF4A-EL] (Lock-Up & EPC) 1993-Up	2	FU9A-21-1G1B
425	71957	Solenoid, [GF4A-EL] (Lock-Up Control) 1993-Up	1	FU9A-21-1F2C
434	71960	Solenoid, [GF4A-EL] (3-2 Down Shift) 1993-Up	1	FU9A-21-1F5D
436	71954	Sensor, [G4A] (Vehicle Speed)	1	
437	71436	Switch, [G4A] (Pulse Generator)	1	
	71970	Sensor, [G4A] (Temperature) (Screw-In)	1	
	71970A	Sensor, [G4A] (Temperature) (Push-In)	1	
	71986C	Wire Harness, [GF4A-EL] (Electronic) (*Fits 7-Solenoid Valve Body)	1	
		MISC. COMPONENTS		
475	71008	Teflon Sleeve, [G4A] (Slides on Turbine Shaft) **(*Included In Overhaul Kits)**	1	

MAZDA/FORD (2-PAN) [G4A/GF4A-EL/4EAT-G]

		HARD PARTS		
500	71912C	Pump, [G4A] 1986-87	1	
500	71912	Pump, [G4A] (Non-Turbo) 1988-92	1	
500	71912A	Pump, [G4A] (Turbo) 1988-92	1	
500	71912B	Pump, [GF4A-EL] (Gear Type) 1993-Up	1	
		PUMP COMPONENTS		
	71912-01K	Pressure Regulator Spool Valve Kit, [G4A] (1-Spool Valve, 1-Spring, & 1-Vane Expander Ring)	1	Sonnax
	71912-02	Pump Vane Expander Ring, [G4A] (*Decreases Internal Leakage)	1	Sonnax
	K74878	Pump Discharge Valve Kit, [GF4A-EL] (With Springs for Gear Type Pumps, 7-Solenoid Units) (*Increases Pump Flow to Pressure Regulator)	1	Sonnax
		HARD PARTS (Continued)		
510	71910	Pump Body, [G4A] (Rotor Type) 1986-87 (.235" Shoulder) (1.700" Thick to Gasket Surface)	1	
510	71910A	Pump Body, [G4A] (Rotor Type) 1988-92 (.235" Shoulder) (1.500" Thick to Gasket Surface)	1	
510	71910B	Pump Body, [G4A] (Rotor Type) 1988-92 (.352" Shoulder) (1.450" Thick to Gasket Surface)	1	
510	71910C	Pump Body, [GF4A-EL] (Gear Type) 1993-Up	1	
520	71913	Stator, [G4A] (Rotor Type) (7-1/4"OD) 1986-92	1	
520	71913A	Stator, [GF4A-EL] (Gear Type) (6-1/4"OD) 1993-Up	1	
529	71812	Converter Reactor, [G4A] (31-Splines) (The Reactor Sitting on Splines & the 2-Bolt Holes Closest Together at 6:00 / 2-Holes at 12:00 are 1-3/8" Center to Center) 1988-Up	1	
529	71812AA	Converter Reactor, [G4A] (31-Splines) (The Reactor Sitting on Splines & the 2-Bolt Holes Closest Together at 6:00 / 2-Holes at 12:00 are 1-3/4" Center to Center) 1988-Up	1	
529	71812A	Converter Reactor, [G4A] (35-Splines) (The Reactor Sitting on Splines & the 2-Bolt Holes Closest Together at 6:00 / 2-Holes at 12:00 are 1-3/8" Center to Center) 1986-87	1	
529	71812B	Converter Reactor, [G4A] (35-Splines) (The Reactor Sitting on Splines & the 2-Bolt Holes Closest Together at 6:00 / 2-Holes at 12:00 are 1-3/4" Center to Center) 1988-Up	1	
529	71812C	Converter Reactor, [G4A] (31-Splines) (The Reactor Sitting on Splines & the 2-Bolt Holes Closest Together at 6:00 / 2-Holes at 12:00 are 1-7/8" Center to Center) 1988-Up	1	
550	71828A	Drum, [G4A] (3-4 Clutch) (16 Teeth Steels)	1	
550	71828	Drum, [G4A] (3-4 Clutch) (30 Teeth Steels) (1.660" Overall Height) (Neck For Inner Piston Seal 2-1/2"OD)	1	
550	71828C	Drum, [G4A] (3-4 Clutch) (30 Teeth Steels) (1.515" Overall Height) (Neck For Inner Piston Seal 2-1/16"OD)	1	
550	71828B	Drum, [G4A] (3-4 Clutch) (30 Teeth Steels) (1.655" Overall Height) (Neck For Inner Piston Seal 2-1/16"OD)	1	
	71828-TL	Test Tool, [G4A] (3-4 Drum Air Check)	1	Sonnax
556	71733E	Drum, [G4A] (Reverse) (22-Splines) (*Uses # 893 & 891 Snap Rings) 1986-87	1	
556	71733B	Drum, [G4A] (Reverse) (22-Splines) (*Uses Only # 892 Snap Ring) 1988-92	1	
556	71733A	Drum, [G4A] (Reverse) (20-Splines) (12-Lug Reverse & 32-Lug Forward Steels) (3-Forward Clutches) 1988-92	1	
556	71733C	Drum, [GF4A-EL] (Reverse) (20-Splines) (32-Lug Reverse & 32-Lug Forward Steels) (4-Forward Clutches) 1993-Up	1	
556	71733	Drum, [G4A] (Reverse) (20-Splines) (12-Lug Reverse & 8-Lug Forward Steels) (3 Forwards Clutches) (Forward Housing on the Outside is 2.560" Tall) 1988-92	1	
556	71733D	Drum, [G4A] (Reverse) (20-Splines) (12-Lug Reverse & 8-Lug Forward Steels) (4 Forward Clutches) (Forward Housing on the Outside is 2.640" Tall) 1988-92	1	
558	71834	Drum, [G4A] (Band) (2 Clutch) (1-1/2" Wide Band) (V-Tooth Friction # 71103) (58 Teeth)	1	
558	71834A	Drum, [G4A] (Band) (2 Clutch) (1-1/2" Wide Band) (Square Teeth Friction # 71103A) (58 Teeth)	1	E92Z-7A626-A
558	71834D	Drum, [G4A] (Band) (3 Clutch) (1-1/2" Wide Band) (Square Teeth Friction # 71103A) (58 Teeth)	1	
558	71834B	Drum, [GF4A-EL] (Band) (1-1/2" Wide Band) (Square Teeth Friction # 71103B) (32 Teeth)	1	

MAZDA/FORD (2-PAN) [G4A/GF4A-EL/4EAT-G]

558	71834C	Drum, [G4A] (Band) (2 Clutch) (1-3/4" Wide Band) (Square Teeth Friction # 71103A) (58 Teeth)	1	
558	71834E	Drum, [G4A] (Band) (3 Clutch) (1-3/4" Wide Band) (Square Teeth Friction # 71103A) (58 Teeth)	1	F92Z-7A626-A
559	71865	Drum, [G4A] (Coast Clutch) (16-Lugs on Outside)	1	
559	71865A	Drum, [G4A] (Coast Clutch) (32-Lugs on Outside)	1	
574	71760	Clutch Hub, [G4A] (Forward Clutch) (Less Sprag) (3 Clutch) (.570" Thick)	1	
574	71760A	Clutch Hub, [G4A] (Forward Clutch) (Less Sprag) (4 Clutch) (.708" Thick)	1	
577	71832	Clutch Hub, [G4A] (Low Clutch With Inner Race) (39 Teeth) (*Uses V-Tooth Low / Reverse Friction)	1	
577	71832A	Clutch Hub, [G4A] (Low Clutch With Inner Race) (10 Inner Teeth)	1	
577	71832AA	Clutch Hub, [G4A] (Low Clutch With Inner Race) (39 Inner Teeth) (*Uses Square Tooth Low / Reverse Friction)	1	
579	71842A	Clutch Hub, [G4A] (Coast Clutch) (Steel) (*Uses Square Teeth Frictions) 1988-Up	1	E92Z-7A360-A
579	71842	Clutch Hub, [G4A] (Coast Clutch) (Cast Iron) (*Uses V-Tooth Frictions) 1986-87	1	
584	71731	Planet, [G4A] (39 Teeth on Flange)	1	
584	71731A	Planet, [G4A] (10 Teeth on Flange)	1	
594	71830	Ring Gear, [G4A] (Planet) (10-Lug)	1	
594	71830A	Ring Gear, [G4A] (Planet) (18-Lug)	1	
614	71836	Sun Gear, [G4A] (3-5/16" Long)	1	
614	71836A	Sun Gear, [G4A] (3-1/16" Long)	1	
626	71826	Shell, [G4A] (With Park Gear) (2.580" Overall Height) (10-Lugs Where Planet Ring Gear Sits)	1	
626	71826E	Shell, [G4A] (With Park Gear) (2.527" Overall Height) (10-Lugs Where Planet Ring Gear Sits)	1	
626	71826B	Shell, [G4A] (With Park Gear) (2.715" Overall Height) (*Uses 3-Tab Washer on Inside) (Has 10-Lugs Where Planet Ring Gear Sits) (From Planet to Park Lugs is 1-3/4")	1	
626	71826C	Shell, [G4A] (With Park Gear) (2.715" Overall Height) (*Uses 3-Tab Washer on Inside) (Has 10-Lugs Where Planet Ring Sits) (From Planet to Park Lugs is 1-5/8")	1	
626	71826D	Shell, [G4A] (With Park Gear) (2.715" Overall Height) (Takes a Bearing W/Races) (1-Piece Bearing) (Has 10-Lugs Where Planet Ring Gear Sits)	1	
626	71826A	Shell, [G4A] (With Park Gear) (Has 18-Lugs Where Planet Ring Gear Sits)	1	
		SPRAGS & ONE WAY CLUTCHES		
642	71727A	Sprag Assembly, [GF4A-EL] (With Outer Race) (Low / Reverse) (7-Outer Lugs) (.520" Thick) (18-Roller) 1993-Up	1	
642	71727	Sprag Assembly, [G4A] (With Outer Race) (Low / Reverse) (7-Outer Lugs) (.550" Thick) (18-Roller) 1986-92	1	
642	71727B	Sprag Assembly, [GF4A-EL] (With Outer Race) (Low / Reverse) (7-Outer Lugs) (.520" Thick) (24-Roller) 1993-Up	1	
642	71727C	Sprag Assembly, [G4A] (With Outer Race) (Low / Reverse) (9-Outer Lugs) (The Area Between Outer 9-Lugs Is Raised Almost as High as Lug)	1	
642	71727D	Sprag Assembly, [G4A] (With Outer Race) (Low / Reverse) (9-Outer Lugs) (The Area Between Outer 9-Lugs Is Countersunk) 1986-87	1	
658	71724	Sprag, [G4A] (Forward)	1	E92Z-7A089-A
		HARD PARTS (Continued)		
671	71822	Pump Drive Shaft, [G4A] (14-5/16" Long) (No Groove on Splines)	1	
671	71822A	Pump Drive Shaft, [G4A] (14-3/4" Long) (With 1-Groove on Splines)	1	
671	71822B	Pump Drive Shaft, [G4A] (14-7/16" Long) (With 2-Grooves on Splines)	1	
673	71820AA	Turbine Shaft, [G4A] (13" Long) (20-Converter Splines) 1988-92	1	
673	71820B	Turbine Shaft, [G4A] (12-15/16" Long) (21-Converter Splines) (No Groove) (22-Spline Reverse Drum) 1988-92	1	

MAZDA/FORD (2-PAN) [G4A/GF4A-EL/4EAT-G]

673	71820	Turbine Shaft, [G4A] (12-3/4" Long) (21-Converter Splines) (20-Spline Reverse Drum) 1988-92	1	
673	71820C	Turbine Shaft, [G4A] (13-3/8" Long) (21-Converter Splines) (20-Spline Reverse Drum) 1988-92	1	
673	71820A	Turbine Shaft, [G4A] (13" Long) (25-Converter Splines) (22-Spline Reverse Drum) 1986-87	1	
673	71820D	Turbine Shaft, [GF4A-EL] (13-1/16" Long) (21-Converter Splines) (With 2-Grooves) (20-Spline Reverse Drum) 1993-Up	1	
679	71950	Shaft, [G4A] (Idler Gear)	1	
680	71410	Governor, [G4A] (15 Teeth Gear) 1986-89	1	
686	71409	Cover, [G4A] (Governor) 1986-89	1	
714	71816A	Idler Gear, [G4A] (With Bearings) (39 Teeth) (No Groove) (1-3/8" Thick)	1	
714	71816AA	Idler Gear, [G4A] (With Bearings) (39 Teeth) (3-Grooves) (1-1/8" Thick)	1	
714	71816B	Idler Gear, [G4A] (With Bearings) (41 Teeth) (No Groove) (1-3/8" Thick)	1	
714	71816BA	Idler Gear, [G4A] (With Bearings) (41 Teeth) (1-Groove) (1-1/8" Thick)	1	
714	71816BB	Idler Gear, [G4A] (With Bearings) (41 Teeth) (4-Grooves) (1-7/16" Thick)	1	
714	71816BC	Idler Gear, [G4A] (With Bearings) (41 Teeth) (2-Grooves)	1	
714	71816C	Idler Gear, [G4A] (With Bearings) (40 Teeth) (5-Grooves) (4x4)	1	
714	71816	Idler Gear, [G4A] (With Bearings) (40 Teeth) (3-Grooves)	1	
714	71816D	Idler Gear, [G4A] (With Bearings) (42 Teeth) (4-Grooves) (1-3/8" Thick)	1	
715	71852A	Differential, [G4A] (With Ring Gear) (74 Teeth) (1.100"OD Axle) (26 Splines)	1	
715	71852C	Differential, [G4A] (With Ring Gear) (74 Teeth) (2-Grooves) (1.180"OD Axle) (28-Splines)	1	F0YZ-4026A
715	71852CA	Differential, [G4A] (With Ring Gear) (74 Teeth) (No Groove) (1.180"OD Axle) (28-Splines)	1	
715	71852D	Differential, [G4A] (With Ring Gear) (79 Teeth) (4-Grooves) (1.175"OD Axle) (28-Splines)	1	
715	71852DA	Differential, [G4A] (With Ring Gear) (79 Teeth) (No Groove) (1.185"OD Axle) (28-Splines)	1	
715	71852E	Differential, [G4A] (With 1.300" Ring Gear) (72 Teeth) (2-Grooves) (28-Splines) (Ring Gear Bolted on)	1	
715	71852	Differential, [G4A] (With .960" Ring Gear) (73 Teeth) (3-Grooves) (28-Splines) (Ring Gear Bolted on)	1	
715	71852F	Differential, [G4A] (With .948" Ring Gear) (73 Teeth) (3-Grooves) (23-Splines) (Ring Gear Riveted on)	1	
715	71852B	Differential, [G4A] (With Bolt-on Ring Gear) (71 Teeth) (1-Groove)	1	
715	71852G	Differential, [G4A] (With Ring Gear) (70 Teeth) (1-Wide Groove)	1	
715	71948	Nut, [G4A] (Idler Gear)	1	
730	71814C	Pinion, [G4A] (Output Gear) (With Bearings) (20 Teeth) (No Groove)	1	
730	71814AA	Pinion, [G4A] (Output Gear) (With Bearings) (20 Teeth) (4-Grooves)	1	
730	71814CA	Pinion, [G4A] (Output Gear) (With Bearings) (20 Teeth) (3-Grooves)	1	
730	71814CB	Pinion, [G4A] (Output Gear) (With Bearings) (20 Teeth) (2-Grooves)	1	
730	71814B	Pinion, [G4A] (Output Gear) (With Bearings) (19 Teeth) (5-Grooves) (4x4)	1	
730	71814BA	Pinion, [G4A] (Output Gear) (With Bearings) (19 Teeth) (3-Grooves)	1	
730	71814BB	Pinion, [G4A] (Output Gear) (With Bearings) (19 Teeth) (4-Grooves)	1	
730	71814A	Pinion, [G4A] (Output Gear) (With Bearings) (19 Teeth) (38-Splines)	1	
735	71818	Cover, [G4A] (Idler Gear) (Cast # 50)	1	
735	71818A	Cover, [G4A] (Idler Gear) (Cast # 31)	1	
735	71818AA	Cover, [G4A] (Idler Gear) (Cast # 32)	1	
735	71818B	Cover, [G4A] (Idler Gear With Valve)	1	
735	71818C	Cover, [G4A] (Idler Gear) (Cast # 1H or 2H)	1	
735	71818D	Cover, [G4A] (Idler Gear) (1-11/16" Overall Thickness)	1	

MAZDA/FORD (2-PAN) [G4A/GF4A-EL/4EAT-G]

		VALVE BODIES (REBUILT)		
740	MF-6325	Valve Body, [G4A] (4-Solenoids, With Turbo) (5-3/8" Manual Valve) 1988-92	1	
740	MF-6326	Valve Body, [G4A] (4-Solenoids, Non Turbo) (5-1/8" Manual Valve) 1988-92	1	
740	MF-6327	Valve Body, [GF4A-EL] (7-Solenoids) (Wired Temp Sensor) 1993-Up	1	
740	MF-6328	Valve Body, [GF4A-EL] (6-Solenoids) (Wired Temp Sensor) 1993-Up	1	
740	MF-6328B	Valve Body, [GF4A-EL] (6-Solenoids) (Plug-In Temp Sensor) 1993-Up	1	
		VALVE BODIES		
740	71846	Valve Body, [G4A] (2-Solenoids)	1	
740	71846A	Valve Body, [G4A] (4-Solenoids With 4-Wire Case Connectors) (Non Turbo) (5-1/8" Manual Valve)	1	
740	71846AA	Valve Body, [G4A] (4-Solenoids With 4-Wire Case Connectors) (With Turbo) (5-3/8" Manual Valve)	1	
740	71846AB	Valve Body, [G4A] (4-Solenoids With 6-Wire Case Connectors) (Non Turbo) (1-Bolt Holds 1-2 Shift Solenoid on)	1	
740	71846AC	Valve Body, [G4A] (4-Solenoids With 6-Wire Case Connectors) (With Turbo) (5-3/8" Manual Valve)	1	
740	71846AD	Valve Body, [G4A] (4-Solenoids With 6-Wire Case Connectors) (Non Turbo) (4-Bolt Holds 1-2 Shift Solenoid on)	1	
740	71846B	Valve Body, [G4A] (1-Solenoid)	1	
740	71846C	Valve Body, [GF4A-EL] (7-Solenoids) (*Uses a Screw In Temperature Sensor)	1	
740	71846CA	Valve Body, [GF4A-EL] (7-Solenoids) (*Uses a Push In Temperature Sensor)	1	
740	71846E	Valve Body, [GF4A-EL] (5-Solenoids) 1993-Up	1	
		VALVE BODY COMPONENTS		
741	71846-01K	Boost Valve Kit, [G4A] (Reverse) (Valve ,Sleeve & End Plug) (*For Units With TV Cables)	1	Sonnax
741	74846-01K	Boost Valve Kit, [G4A] (Reverse) (Valve, Sleeve & End Plug) (*For Electronic Units)	1	Sonnax
741	71617	Valve Body Cam Wheel, [G4A]	1	FU01-21369A
		HARD PARTS (Continued)		
750	71824A	Bell Housing, [G4A] (Top Bolts 6-1/4" Centers) (With 2 / O-Rings on 2-3 Accumulator) (14-Bolt) (No Governor)	1	
750	71824AA	Bell Housing, [G4A] (Top Bolts 6-1/4" Centers) (With 4 /O-Rings on 2-3 Accumulator) (14-Bolt) (Governor Type)	1	
750	71824AB	Bell Housing, [G4A] (Top Bolts 6-1/4" Center to Center) (With 3 /O-Rings on 2-3 Accumulator)	1	
750	71824BA	Bell Housing, [G4A] (Top Bolts 5-1/8" Centers) (With 1.00"OD 2-3 Accumulator) (16-Bolts to Case)	1	
750	71824B	Bell Housing, [G4A] (Top Bolts 5-1/8" Centers) (With 1.170"OD 2-3 Accumulator) (16-Bolts to Case)	1	
750	71824	Bell Housing, [G4A] (Top Bolts 5-1/8" Centers) (With 3 / O-Rings on 2-3 Accumulator) (14-Bolts to Case)	1	
750	71824H	Bell Housing, [G4A] (Top Bolts 5-1/8" Centers) (2-3 Accumulator In Idler Gear Cover) (14 Bolts to Case)	1	
750	71824C	Bell Housing, [G4A] (Top Bolts 6-1/4" Centers) (With 2 / O-Rings on 2-3 Accumulator) (15-Bolts to Case)	1	
750	71824D	Bell Housing, [G4A] (Top Bolts 6-1/4" Center to Center) (4x4)	1	
750	71824CA	Bell Housing, [G4A] (Top Bolts 6-1/4" Center to Center) (Cast # FU50)	1	
750	71824E	Bell Housing, [G4A] (Top Bolts 2-1/16" Centers) (Cast # FU9B) (*With 2 / O-Rings on 2-3 Accumulator)	1	
750	71824EA	Bell Housing, [G4A] (Top Bolts 2-1/16" Center to Center) (Cast # FU2B) (Starter at 11:00)	1	
750	71824EB	Bell Housing, [G4A] (Top Bolts 2-1/16" Center to Center) (Cast # FU2B) (Starter at 2:00)	1	
750	71824F	Bell Housing, [G4A] (Top Bolts 4-3/4" Center to Center) (Cast # FU80)	1	

MAZDA/FORD (2-PAN) [G4A/GF4A-EL/4EAT-G]

750	71824G	Bell Housing, [G4A] (Top Bolts 6-1/2" Center to Center) (Cast # FU9A)	1	
760	71848	Case, [G4A] (14-Bolts to Bell) (3-Bolt Filter) (Governor Type)	1	
760	71848A	Case, [G4A] (14-Bolts to Bell) (4-Bolt Filter) (Governor Type)	1	
760	71848C	Case, [G4A] (14-Bolts to Bell) (3-Bolt Filter) (Electronic Type)	1	
760	71848AA	Case, [G4A] (14-Bolts to Bell) (4-Bolt Filter) (Electronic Type)	1	
760	71848B	Case, [G4A] (16-Bolts to Bell) (3-Bolt Filter) (Cable Operated) (With 1.00"OD 2-3 Accumulator Piston) (8" From Bell to Pump) (Cast # TL)	1	
760	71848BA	Case, [G4A] (16-Bolts to Bell) (3-Bolt Filter) (Cable Operated) (With 1.00"OD 2-3 Accumulator Piston) (8" From Bell to Pump) (Cast # FU9A)	1	
760	71848BB	Case, [G4A] (16-Bolts to Bell) (3-Bolt Filter) (Cable Operated) (With 1.70"OD 2-3 Accumulator Piston) (8" From Bell to Pump) (Cast # FU9B)	1	
760	71848BC	Case, [G4A] (16-Bolts to Bell) (3-Bolt Filter) (Cable Operated) (With 1.70"OD 2-3 Accumulator Piston) (8" From Bell to Pump)	1	
760	71848BD	Case, [G4A] (16-Bolts to Bell) (3-Bolt Filter) (Cable Operated) (With 1.70"OD 2-3 Accumulator Piston) (8-3/8" From Bell to Pump) (Cast # FU32)	1	
760	71848D	Case, [G4A] (4x4)	1	
765	71850	Pan, [G4A] (Bottom) (Non Turbo) (7/8" Deep)	1	
765	71850C	Pan, [G4A] (Bottom) (With Turbo)	1	
765	71850A	Pan, [G4A] (Bottom) (Non Turbo) (1/2" Deep)	1	
765	71850B	Pan, [GF4A-EL] (Bottom) (Non Turbo) (2-1/4" Deep)	1	
766	71844	Pan, [G4A] (Side) (Valve Body Cover) (No Vent)	1	
766	71844A	Pan, [G4A] (Side) (Valve Body Cover) (With Vent With Metal Cap)	1	
766	71844B	Pan, [G4A] (Side) (Valve Body Cover) (With Vent With Hose)	1	
774	71922	Speed-O Housing, [G4A] (Aluminum Housing) (1-Bolt Cable Type) (20 Teeth Gear)	1	
847	71817	Gear, [G4A] (Speed-O Drive) (28 Teeth) (on Differential)	1	
847	71817A	Gear, [G4A] (Speed-O Drive) (25 Teeth) (on Differential)	1	3787240
848	71405	Gear, [G4A] (Speed-O Driven) (20 Teeth)	1	
853	71810	Cushion, [G4A] (Forward Clutch) (5-3/4"OD) (No Teeth) 1986-92	1	E92Z-17285-A
854	71811	Spacer, [G4A] (Reverse Clutch Spring to Snap Ring) 1986-92	1	E92Z-7G400-A
855	71812	Spring Stop, [G4A] (Reverse Clutch Return Spring)	1	
856	71813	Cushion, [G4A] (Coast Clutch)	1	
857	71814	Wave Ring, [G4A] (Between Sprag & #870 Snap Ring)	1	
900	K71895	Servo Assembly, [G4A] (1.567"OD Small End of Piston)	1	
900	K71895A	Servo Assembly, [G4A] (1.875"OD Small End of Piston)	1	
900	K71895B	Servo Assembly, [G4A] (1.925"OD Small End of Piston)	1	
900	K71895C	Servo Assembly, [G4A] (2.315"OD Small End of Piston) (*Stepped Down to 1.00"OD)	1	
900	K71895D	Servo Assembly, [G4A] (2.315"OD Small End of Piston) (*With No Step)	1	
900	K71895E	Servo Assembly, [G4A] (1.410"OD Small End of Piston)	1	
901	K71891	Spring, [G4A] (Servo) (3 Per Pack)	1	TTK
901	K71892	Spring, [G4A] (Servo) (3 Per Pack) (*Corrects: 2-3 Flare Up & 1-2 or 3-4 Slide or Runaway)	1	TTK
901	K71893	Spring, [G4A] (Servo) (3 Per Pack) (*Helps Rough 1-2 & 3-4 Upshift)	1	TTK
904	71988	Cover, [G4A] (Servo)	1	
915	K71689	Band Strut Set, [G4A] (With Pin)	1	
930	K71890	Accumulator Assembly, [G4A] (2-3) (1.00"OD Piston) (2 / O-Ring Type)	1	
930	K71890A	Accumulator Assembly, [G4A] (2-3) (1.70"OD Piston) (2 / O-Ring Type)	1	
930	K71890B	Accumulator Assembly, [G4A] (2-3) (3 / O-Ring Type)	1	
960	71863	Piston, [G4A] (3-4 Clutch)	1	

MAZDA/FORD (2-PAN) [G4A/GF4A-EL/4EAT-G]

966	71866	Piston, [G4A] (Reverse Clutch) (.555” Thick) 1993-Up	1	E32Z-7D042-A
966	71866A	Piston, [G4A] (Reverse Clutch) (.605” Thick) (*Uses 20-Coil Springs)	1	
966	71866B	Piston, [G4A] (Reverse Clutch) (.645” Thick) 1988-92	1	E92Z-7402A
967	71864	Piston, [G4A] (Low / Reverse Clutch) (.605” Thick) (*Uses 20-Coil Springs)	1	
969	71862	Piston, [G4A] (Coast Clutch)	1	
970	71970	Retainer W/Spring, [G4A] (3-4 Clutch)	1	
976	71745	Spring, [G4A] (Reverse Clutch Return) (Beveled) (.030” Thick) 1986-87	1	E92Z-7E085E
976	71745A	Spring, [G4A] (Reverse Clutch Return) (Beveled) (.060” Thick) 1988-Up	1	E92Z-7E085E
976	71115W	Spring, [G4A] (Reverse Diaphram Waved Clutch Return) (*Replaces Belleville) 1986-92	1	Alto
977	71971	Retainer W/Spring, [G4A] (Low / Reverse Clutch)	1	E92Z-7F299-A
979	71972	Retainer W/Spring, [G4A] (Coast Clutch)	1	E92Z-7F222-A
991	K71676	Linkage, [G4A] (Internal)	1	
999	K71679	Switch Box With Oil Hoses, [G4A]	1	

MAZDA/FORD (1-PAN) [F4A-EL/F4EAT/4EAT-F]

FWD 4 Speed (1 Pan)

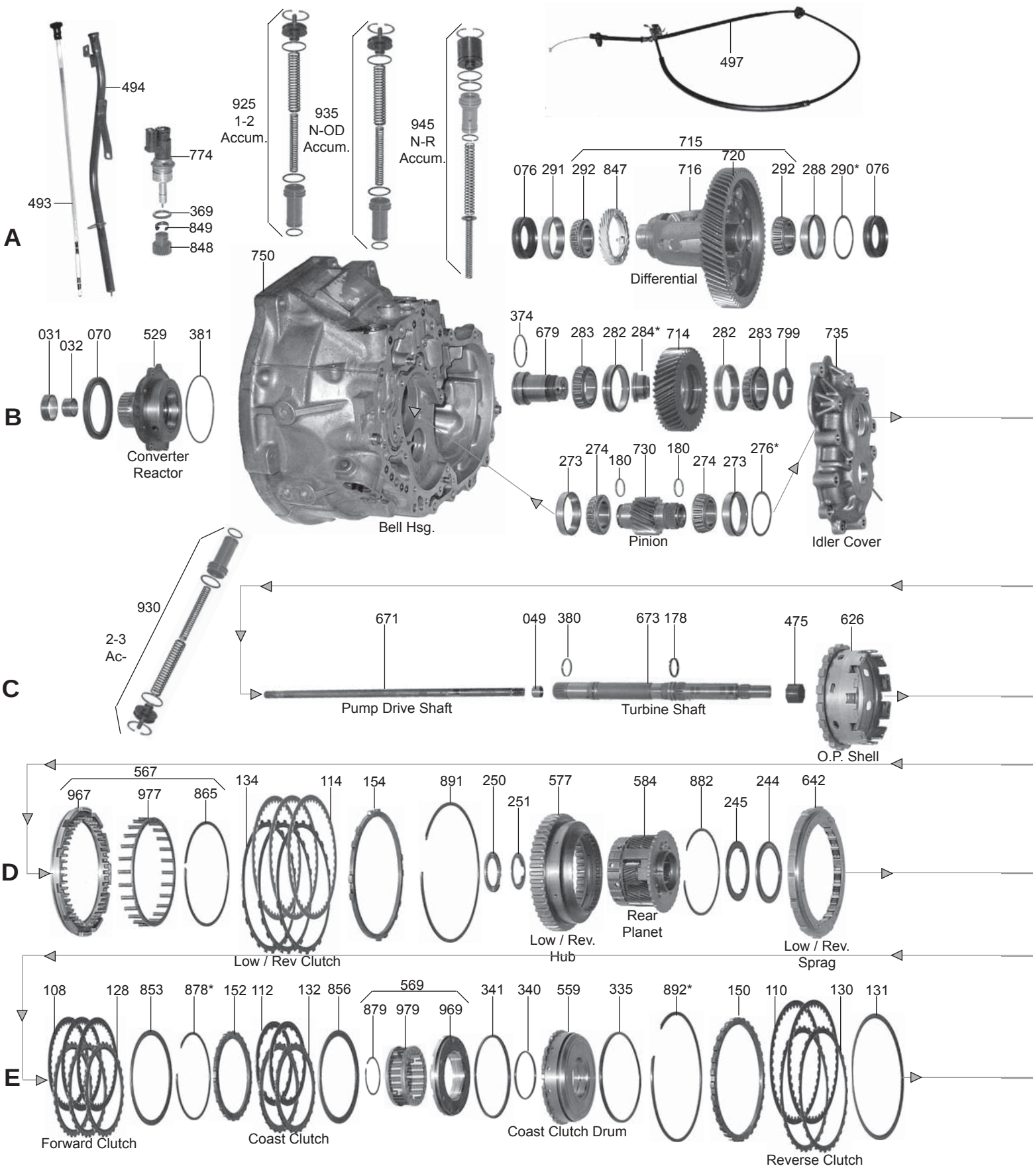

MAZDA/FORD (1-PAN) [F4A-EL/F4EAT/4EAT-F]

FWD 4 Speed (1 Pan)

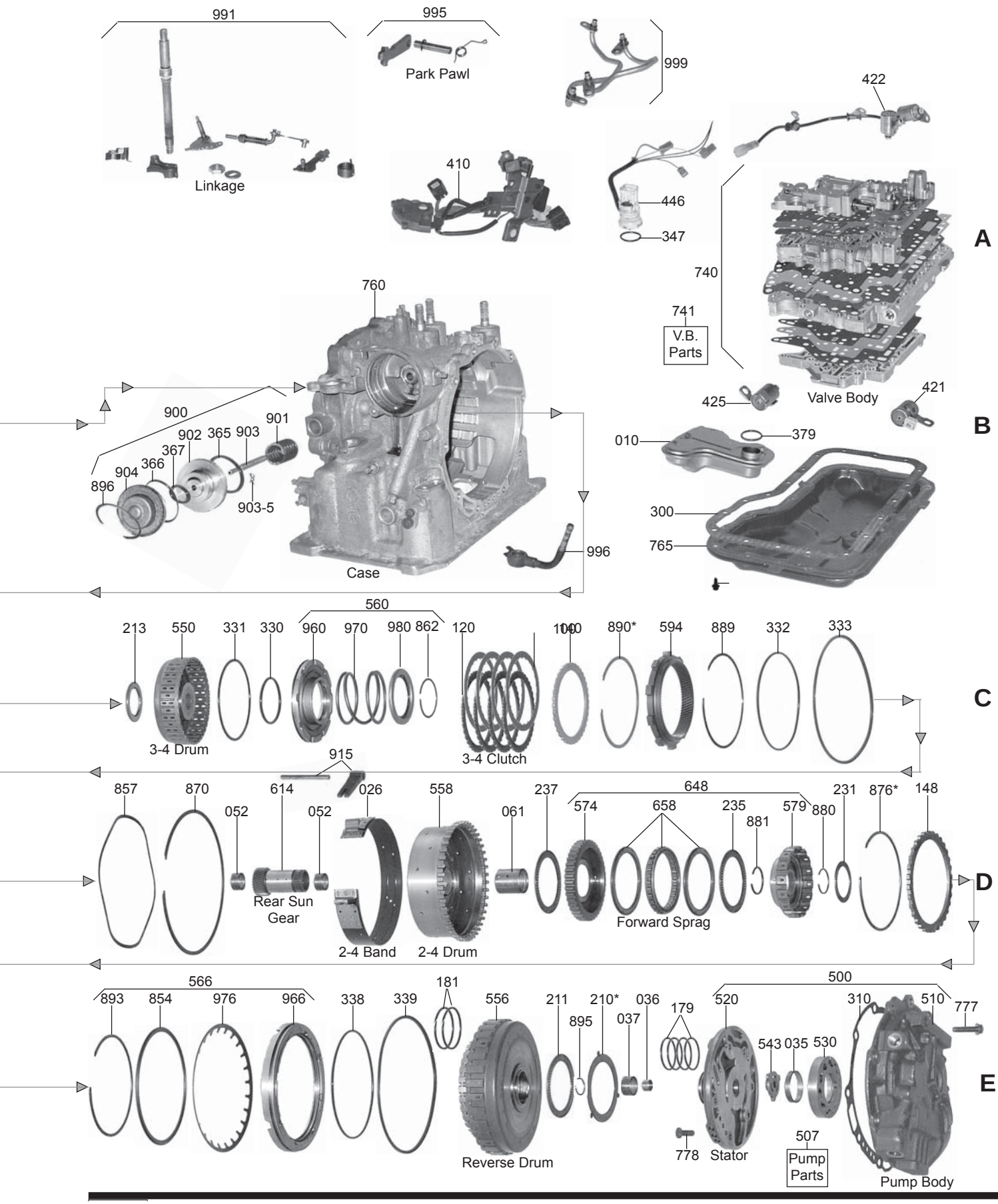

MAZDA/FORD (1-PAN) [F4A-EL/F4EAT/4EAT-F]

ILL#	PART#	DESCRIPTION	QTY	REF #
		OVERHAUL KITS		
	K74900	Overhaul Kit, [F4A-EL / 4EAT-F] 1990-Up	1	
		MASTER L/STEEL KIT		
	DK7400-S	Master L/Steels Kit, [F4A-EL / 4EAT-F] 1990-Up (*Except KIA 2003-Up)	1	
	DK7400A-S	Master L/Steels Kit, [F4A-EL] (KIA) 2003-Up	1	
		MASTER W/STEEL KIT		
	DK7400	Master W/Steels Kit, [F4A-EL / 4EAT-F] 1990-Up (*Except KIA 2003-Up)	1	
	DK7400A	Master W/Steels Kit, [F4A-EL] (KIA) 2003-Up	1	
		FILTER		
010	74710	Filter, [F4A-EL / 4EAT-F] (Without Tube) 1990-Up	1	F1CZ-7A098-A
010	74710A	Filter, [F4A-EL / 4EAT-F] (With Tube) 1993-Up	1	FW01-21-500
		FILTER KIT		
	FK74710	Filter Kit, [F4A-EL / 4EAT-F] (Without Tube) 1990-Up	1	
	FK74710A	Filter Kit, [F4A-EL / 4EAT-F] (With Tube) 1993-Up	1	
		BANDS		
026	74700	Band, [F4A-EL / 4EAT-F] 1990-Up	1	
		BUSHINGS		
	K74000	Bushing Kit, [F4A-EL / 4EAT-F] (Mazda & Ford) 1990-Up	1	
031	71002	Bushing, [F4A-EL / 4EAT-F] (Converter Hub) (57.1mm) 1990-Up	1	
032	74010	Bushing, [F4A-EL / 4EAT-F] (Converter Reactor (Small) to Turbine Shaft) 1990-Up	1	
035	74003	Bushing, [F4A-EL / 4EAT-F] (Inner Pump Gear) 1990-Up	1	
036	74006	Bushing, [F4A-EL / 4EAT-F] (Stator) (Small) (*For Pump Drive Shaft) 1990-Up	1	
037	74005	Bushing, [F4A-EL / 4EAT-F] (Stator) (Large) (*For Turbine Shaft) 1990-Up	1	
052	74001	Bushing, [F4A-EL / 4EAT-F] (Sun Gear) 1990-Up	2	
061	74007	Bushing, [F4A-EL / 4EAT-F] (2-4 Drum) 1990-Up	1	
		METAL CLAD SEALS		
070	71151	Seal, [F4A-EL / 4EAT-F] (Converter) 1990-Up	1	
070	71151A	Seal, [F4A-EL / 4EAT-F] (Converter) (*Wider Seal to Prevent Seal Blowout)	1	
	91511	Seal, [F4A-EL / 4EAT-F] (Speed-O Shaft) 1990-Up	1	
076	91152	Seal, [F4A-EL / 4EAT-F] (Axle) (Both Sides) 1990-Up	2	
	74991	Retainer, [F4A-EL / 4EAT-F] (Front Seal) (3-Bolt Metal) (*Prevents Seal Blowout)	1	
		FRICTION CLUTCH		
100	74104	Friction, [F4A-EL / 4EAT-F] (3-4 Clutch) (.062") (22 Teeth) 1990-Up	4	F1CZ-7B442-C
108	74101	Friction, [F4A-EL / 4EAT-F] (Forward Clutch) (.062") (42 Teeth) 1990-Up	3	F1CZ-7B164-6
108	74101A	Friction, [F4A-EL / 4EAT-F] (Forward Clutch) (.075") (47 Teeth) (KIA) 2003-Up	3	
110	74103	Friction, [F4A-EL / 4EAT-F] (Reverse Clutch) (.062") (45 Teeth) 1990-Up	2	F1CZ-7B442-A
112	74102	Friction, [F4A-EL / 4EAT-F] (Coast Clutch) (.062") (16 Teeth) 1990-Up	2	F1CZ-7B164-E
114	74105	Friction, [F4A-EL / 4EAT-F] (Low / Reverse) (.062") (48 Teeth) 1990-Up	4	F1CZ-7B442-E
	K74100	Friction Module, [F4A-EL / 4EAT-F] 1990-Up (*Except KIA 2003-Up)	1	
		STEEL CLUTCH		
120	74114	Steel, [F4A-EL / 4EAT-F] (3-4 Clutch) (.061") (38 Teeth) 1990-Up	4	

MAZDA/FORD (1-PAN) [F4A-EL/F4EAT/4EAT-F]

120	74114B	Steel, [F4A-EL / 4EAT-F] (3-4 Clutch) (.071") (38 Teeth) 1990-Up	4	
120	74114A	Steel, [F4A-EL / 4EAT-F] (3-4 Clutch) (.091") (38 Teeth) 1990-Up	4	
120	74114C	Steel, [F4A-EL / 4EAT-F] (3-4 Clutch) (.130") (38 Teeth) 1997-Up	4	
128	74111	Steel, [F4A-EL / 4EAT-F] (Forward Clutch) (.063") (32 Teeth) 1990-Up	3	
130	74113	Steel, [F4A-EL / 4EAT-F] (Reverse Clutch) (.063") (32 Teeth) 1990-Up	2	
131	74113A	Steel, [F4A-EL / 4EAT-F] (Reverse Clutch) (.057") (6-7/8"OD) (Dished) 1990-Up	1	
132	74112	Steel, [F4A-EL / 4EAT-F] (Coast Clutch) (.063") (26 Teeth) 1990-Up	2	
134	74115	Steel, [F4A-EL / 4EAT-F] (Low / Reverse Clutch) (.063") (16 Teeth) 1990-Up	4	
		CLUTCH PRESSURE PLATES		
140	74131	Pressure Plate, [F4A-EL / 4EAT-F] (3-4 Clutch) (.140")	1	F1CZ-7B066-D
140	74131A	Pressure Plate, [F4A-EL / 4EAT-F] (3-4 Clutch) (.175")	1	
148	74133	Pressure Plate, [F4A-EL / 4EAT-F] (Forward Clutch)	1	
150	74135	Pressure Plate, [F4A-EL / 4EAT-F] (Reverse Clutch)	1	
152	74134	Pressure Plate, [F4A-EL / 4EAT-F] (Coast Clutch)	1	F1CZ-7B066-B
154	74132	Pressure Plate, [F4A-EL / 4EAT-F] (Low / Reverse Clutch)	1	
		VALVE BODY KITS		
	K74908	Shift Kit, [F4A-EL / 4EAT-F] 1990-Up	1	Transgo
	K74908T	Valve Body Kit, [F4A-EL]	1	Translab
		OIL SEALING RINGS		
	K74903	Ring Kit, [F4A-EL / 4EAT-F] (Full) (Metal) 1990-Up	1	
	K74903T	Ring Kit, [F4A-EL / 4EAT-F] (Full) (Teflon) 1990-Up	1	
178	74303T	Ring, [F4A-EL / 4EAT-F] (Turbine Shaft) (Teflon) 1990-Up	1	
179	74300	Ring, [F4A-EL / 4EAT-F] (Pump Stator) (Metal) 1990-Up	4	
179	74300T	Ring, [F4A-EL / 4EAT-F] (Pump Stator) (Teflon) 1990-Up	4	F1CZ-7D019-A
181	74301	Ring, [F4A-EL / 4EAT-F] (Coast Clutch) (Teflon) 1990-Up	2	
180	74302	Ring, [F4A-EL / 4EAT-F] (Output Gear) (Metal) 1990-Up	2	
	74306T	Ring, [F4A-EL / 4EAT-F] (2-3 / Neutral / Overdrive) (Small) (Scarf Cut) (Teflon) 1990-Up	2	
	74307T	Ring, [F4A-EL / 4EAT-F] (Neutral / Reverse Accumulator) (Small) (Butt Joint) (Teflon) 1990-Up	1	
	74305T	Ring, [F4A-EL / 4EAT-F] (2-3 / Neutral / Overdrive / Neutral /Reverse Accumulator) (Large) (Scarf Cut) (Teflon) 1990-Up	3	
		WASHERS & BEARINGS		
210	71400E	Race, [F4A-EL / 4EAT-F] (Stator to Reverse Drum) (1.2mm, .047")	1	
210	71400F	Race, [F4A-EL / 4EAT-F] (Stator to Reverse Drum) (1.4mm, .055")	1	
210	71400A	Race, [F4A-EL / 4EAT-F] (Stator to Reverse Drum) (1.6mm, .063")	1	
210	71400B	Race, [F4A-EL / 4EAT-F] (Stator to Reverse Drum) (1.8mm, .070")	1	
210	71400C	Race, [F4A-EL / 4EAT-F] (Stator to Reverse Drum) (2.0mm, .078")	1	
210	71400D	Race, [F4A-EL / 4EAT-F] (Stator to Reverse Drum) (2.2mm, .086")	1	
	71400-15	Shim Kit, [F4A-EL / 4EAT-F] (*To Adjust 71400 Race Above) (Contains: (5ea) .015" Shims)	1	Sonnax
211	74454	Bearing W/Race, [F4A-EL / 4EAT-F] (Stator to Reverse Drum)	1	F1CZ-7F241-A
213	74455	Bearing W/Race, [F4A-EL / 4EAT-F] (Shell to 3-4 Clutch Drum)	1	F1CZ-7F404-A
231	74454	Bearing W/Race, [F4A-EL / 4EAT-F] (Reverse Drum to Hub)	1	
235	74454	Bearing, [F4A-EL / 4EAT-F] (Drum With Sun Gear to Forward Clutch Hub)	1	F1CZ-7A623-A
237	74451	Bearing, [F4A-EL / 4EAT-F] (Band Drum to Forward Sprag)	1	

MAZDA/FORD (1-PAN) [F4A-EL/F4EAT/4EAT-F]

244	74419	Bearing, [F4A-EL / 4EAT-F] (Planet to Sun Gear Drum)	1	
245	74410	Race, [F4A-EL / 4EAT-F] (Planet to Sun Gear Drum)	1	F1CZ-7F368-A
250	74420	Race, [F4A-EL / 4EAT-F] (Drum to Planet)	1	
251	74453	Bearing W/Race, [F4A-EL / 4EAT-F] (Drum to Planet)	1	F1CZ-7D234-A
276	71421	Shim, [F4A-EL / 4EAT-F] (Pinion Cup Race to Pinion Retainer)	1	
282	74975	Cup Race, [F4A-EL / 4EAT-F] (Idler Gear)	2	
283	74976	Cone Bearing, [F4A-EL / 4EAT-F] (Idler Gear & Pinion Gear)	2	
284	71422	Shim, [F4A-EL / 4EAT-F] (Between Idler Gear Bearings) **(*Specify Thickness .150" to .161")**	1	30801815
288	32975	Cup Race, [F4A-EL / 4EAT-F] (Differential) (Rear)	1	
289	32976	Cone Bearing, [F4A-EL / 4EAT-F] (Differential) (Rear)	1	
290	71423	Shim, [F4A-EL / 4EAT-F] (Differential Cup Race to Case)	1	
291	32975	Cup Race, [F4A-EL / 4EAT-F] (Differential) (Front)	1	
292	32976	Cone Bearing, [F4A-EL / 4EAT-F] (Differential) (Front)	1	
	K32976A	Bearing & Race Kit, [F4A-EL / 4EAT-F] (Differential) (Both Sides) (1.378"ID) (23-Rollers)	2	
		GASKETS & RUBBER COMPONENTS		
300	74500	Gasket, [F4A-EL / 4EAT-F] (Pan) (19-Holes) 1990-Up (Cork)	1	
300	74500**D** or **F**	Gasket, [F4A-EL / 4EAT-F] (Pan) (19-Holes) 1990-Up **(*"D" Duraprene or "F" Farpak)**	1	
310	74501A	Gasket, [F4A-EL / 4EAT-F] (Front Pump) 1990-Up	1	
	K74900-4	Kit, [F4A-EL / 4EAT-F] (Accumulator "D" Ring)	1	
369	74509	O-Ring, [F4A-EL / 4EAT-F] (Speed-O Housing to Case O-Ring) 1990-Up	1	
379	74503	D-Ring, [F4A-EL] (Filter O-Ring)	1	
		TECHNICAL MANUALS		
	TMF4EAT	Technical Manual, [4EAT-F] (Mazda / Ford) 1990-Up	1	ATSG
		ELECTRICAL COMPONENTS		
410	74990	Switch, Neutral [F4A-EL / 4EAT-F] (With Connector on End of Wire Harness) 1991-96	1	
410	74990A	Switch, Neutral [F4A-EL / 4EAT-F] (With Connector on Switch, Pointing Out to Side of Trans) (No Wires on Switch) 1997-02	1	
410	74990B	Switch, Neutral [F4A-EL / 4EAT-F] (With Connector on Switch & Points Up) (No Wire Harness) 1997-Up	1	
410	74990C	Switch, Neutral [F4A-EL / 4EAT-F] (With Connector on Switch, Pointing to Rear of Trans) (No Wire Harness) 1997-Up	1	
	74436	Pulse Generator, [F4A-EL / 4EAT-F]	1	
	K74954	Solenoid Set, [F4A-EL / 4EAT-F] (Has 4-Solenoids) (*Does not include EPC Solenoid) 1991-Up	1	
421	74954	Solenoid, [F4A-EL / 4EAT-F] (1-2 Shift) 1990-Up	1	35678121
422	74955	Solenoid, [F4A-EL / 4EAT-F] (2-3 & 3-4 Shift)	2	35678122
425	74929	Solenoid, [F4A-EL / 4EAT-F] (Torque Converter Clutch Lock-Up)	1	
	74956	Solenoid, [F4A-EL / 4EAT-F] (EPC) 1998-Up (For Valve Body With 5 Solenoids) (Solenoid is .940"OD) (*Except KIA)	1	
	74956A	Solenoid, [F4A-EL] (EPC) 1998-Up (For Valve Body With 5-Solenoids) (Solenoid is .800"OD) (*For KIA)	1	
446	74986	Wire Harness, [F4A-EL / 4EAT-F] (Internal) (6-Pin Case Connector With 2-Two Wire & 2-One Wire Connectors) 1990-Up	1	
446	74986A	Wire Harness, [F4A-EL / 4EAT-F] (Internal) (7-Pin Case Connector With 2-Two Wire & 3-One Wire Connectors) 1990-Up	1	
		MISC. COMPONENTS		
475	74008	Sleeve, [F4A-EL / 4EAT-F] (Turbine Shaft) (Teflon) (*Included In Overhaul Kits)	1	

MAZDA/FORD (1-PAN) [F4A-EL/F4EAT/4EAT-F]

		HARD PARTS		
500	74912	Pump, [F4A-EL / 4EAT-F] (Complete) (With 4-Lube Holes Between Rings)	1	
500	74912A	Pump, [F4A-EL / 4EAT-F] (Complete) (With 6-Lube Holes Between Rings)	1	
		PUMP COMPONENTS		
507	K74878	Pump Discharge Valve Kit, [F4A-EL / 4EAT-F] (Gear Type Pump) (*Increases Pump Flow to Pressure Regulator)	1	Sonnax
507	K74908V	Pump Valve Kit, [F4A-EL / 4EAT-F]	1	Transgo
		HARD PARTS (Continued)		
510	74913	Pump Body W/Gears, [F4A-EL / 4EAT-F] (With 3-Lube Holes Between Bolts)	1	
510	74913A	Pump Body W/Gears, [F4A-EL / 4EAT-F] (With 4-Lube Holes Between Bolts)	1	
520	74911	Stator, [F4A-EL / 4EAT-F] (With 4-Lube Holes Between Rings)	1	
520	74911A	Stator, [F4A-EL / 4EAT-F] (With 6-Lube Holes Between Rings)	1	
529	74812	Converter Reactor, [F4A-EL / 4EAT-F] (31-Splines)	1	
550	74828	Drum, [F4A-EL / 4EAT-F] (3-4 Clutch) (Stamped Steel) (With 38-Holes Outside)	1	
550	74828A	Drum, [F4A-EL / 4EAT-F] (3-4 Clutch) (Stamped Steel) (With 57-Holes Outside)	1	
550	74828B	Drum, [F4A-EL / 4EAT-F] (3-4 Clutch) (Smooth Outside) (With 57-Holes Outside)	1	
556	74733	Drum, [F4A-EL / 4EAT-F] (Reverse & Forward Clutch)	1	
558	74736	Drum, [F4A-EL / 4EAT-F] (Band Drum) (With Sun Gear)	1	43678261
559	74864	Drum, [F4A-EL / 4EAT-F] (Coast Clutch)	1	
574	74838	Clutch Hub, [F4A-EL / 4EAT-F] (Forward Clutch) (*Less Sprag)	1	
577	74851	Clutch Hub & Inner Race, [F4A-EL / 4EAT-F] (Low / Reverse Clutch) (34 Teeth Hub)	1	F1CZ-7A089-A
579	74842	Clutch Hub, [F4A-EL / 4EAT-F] (Coast Clutch) (With Inner Race)	1	
584	74731	Planet, [F4A-EL / 4EAT-F] (34 Teeth on Flange) (With .275” Tall Step in Center of Flange) (*Where #245 Sits)	1	
584	74731A	Planet, [F4A-EL / 4EAT-F] (34 Teeth on Flange) (No Raised Step in Center of Flange) (*Where #245 Sits)	1	
594	74830	Ring Gear, [F4A-EL / 4EAT-F] (Planet) (10-Lugs, 5-1/8”OD)	1	
614	74850	Sun Gear, [F4A-EL / 4EAT-F] (2-13/16” Long)	1	
626	74826	Shell, [F4A-EL / 4EAT-F] (Output With 19-Lug Park Gear)	1	F3CZ-7F283-A
626	74826A	Shell, [F4A-EL / 4EAT-F] (Output With 12-Lug Park Gear)	1	
		SPRAGS & ONE WAY CLUTCHES		
642	74727	Sprag, [F4A-EL / 4EAT-F] (Low / Reverse With Outer Race) (.590” Wide)	1	F1CZ-7B456-A
642	74727A	Sprag, [F4A-EL / 4EAT-F] (Low / Reverse With Outer Race) (.605” Wide)	1	
648	K74724	Sprag Assembly, [F4A-EL / 4EAT-F] (Forward With Inner & Outer Race)	1	
658	74724	Sprag, [F4A-EL / 4EAT-F] (Forward)	1	F1CZ-7A089-B
		HARD PARTS (Continued)		
671	74822	Pump Shaft, [F4A-EL / 4EAT-F] (Drive) (13-9/16” Long)	1	
673	74853	Turbine Shaft, [F4A-EL / 4EAT-F] (11-3/8” Long)	1	
679	74950	Shaft, [F4A-EL / 4EAT-F] (Idler Gear)	1	
714	74816	Idler Gear, [F4A-EL / 4EAT-F] (With Bearings) (39 Teeth) (1-3/16” Thick) (3-Grooves)	1	
714	74816A	Idler Gear, [F4A-EL / 4EAT-F] (With Bearings) (40 Teeth) (1-Groove)	1	
714	74816B	Idler Gear, [F4A-EL / 4EAT-F] (With Bearings) (38 Teeth) (1.150” Thick) (4-Grooves)	1	
714	74816C	Idler Gear, [F4A-EL / 4EAT-F] (With Bearings) (41 Teeth)	1	
715	74952	Differential Assembly, [F4A-EL / 4EAT-F] (With Ring Gear) (71 Teeth) (3-Grooves)	1	
715	74952A	Differential Assembly, [F4A-EL / 4EAT-F] (With Ring Gear) (71 Teeth) (1-Groove)	1	

MAZDA/FORD (1-PAN) [F4A-EL/F4EAT/4EAT-F]

715	74952B	Differential Assembly, [F4A-EL / 4EAT-F] (With Ring Gear) (71 Teeth) (4-Grooves)	1	
715	74952C	Differential Assembly, [F4A-EL / 4EAT-F] (With Ring Gear) (70 Teeth) (1-Groove)	1	
715	74952D	Differential Assembly, [F4A-EL / 4EAT-F] (With Ring Gear) (69 Teeth) (1-Groove) (In middle)	1	
715	74952E	Differential Assembly, [F4A-EL / 4EAT-F] (With Ring Gear) (69 Teeth) (2-Grooves)	1	
715	74952F	Differential Assembly, [F4A-EL / 4EAT-F] (With Ring Gear) (69 Teeth) (1-Wide Groove on Bearing Side)	1	
715	74952G	Differential Assembly, [F4A-EL / 4EAT-F] (With Ring Gear) (69 Teeth) (1-Narrow Groove on Bearing Side)	1	
715	74952H	Differential Assembly, [F4A-EL / 4EAT-F] (With Ring Gear) (69 Teeth) (1-Wide Groove on Housing Side)	1	
715	74952J	Differential Assembly, [F4A-EL / 4EAT-F] (With Ring Gear) (73 Teeth) (3-Grooves)	1	
715	74952K	Differential Assembly, [F4A-EL / 4EAT-F] (With Ring Gear) (73 Teeth) (4-Grooves)	1	
715	74952L	Differential Assembly, [F4A-EL / 4EAT-F] (With Ring Gear) (78 Teeth)	1	
730	74814	Pinion, [F4A-EL / 4EAT-F] (Output Gear With Bearings) **(*Specify Tooth Count, *Splines & *Number of ID Grooves)**	1	
735	74818	Cover, [F4A-EL / 4EAT-F] (Idler Gear)	1	
		VALVE BODIES (REBUILT)		
740	MF-6320	Valve Body, [F4A-EL / 4EAT-F] (4-Solenoid) 1990-97	1	
740	MF-6321	Valve Body, [F4A-EL / 4EAT-F] (5-Solenoid) (With Tube) 1997-Up	1	
740	MF-6322	Valve Body, [4EAT-F] (5-Solenoid) (Without Tube) 1997-Up	1	
740	MF-6323	Valve Body, [F4A-EL] (KIA Style With Small Connector)	1	
740	MF-6324	Valve Body, [F4A-EL] (KIA Style With Large Connector)	1	
		VALVE BODIES		
740	74846	Valve Body, [F4A-EL / 4EAT-F] (4-Solenoid) 1990-97	1	F1CZ-7A100-A
740	74846A	Valve Body, [F4A-EL] (KIA With Small Connector)	1	
740	74846AA	Valve Body, [F4A-EL] (KIA With Large Connector)	1	
740	74846B	Valve Body, [4EAT-F] (5-Solenoid) (With 1-Tube) (Ford & Mazda)	1	
740	74846C	Valve Body, [4EAT-F] (5-Solenoid) (No Tube) (Ford & Mazda)	1	
		VALVE BODY COMPONENTS		
741	74846-01K	Boost Valve Kit, [F4A-EL / 4EAT-F] (Valve, Sleeve & End Plug) (*For Units With Electronic Trans)	1	Sonnax
741	74846-04	Valve, [F4A-EL / 4EAT-F] (Pressure Modulator) (Oversize) **(*Use W/Tool # 74846-TL4)**	1	Sonnax
	74846-TL4	Reamer & Jig, [F4A-EL / 4EAT-F] (*For 74846-04)	1	Sonnax
741	74846-05	Valve, [F4A-EL / 4EAT-F] (Pressure Regulator) (Oversize) **(*Use W/Tool # 74846-TL5)**	1	Sonnax
	74846-TL5	Reamer & Jig, [F4A-EL / 4EAT-F] (*For 74846-05)	1	Sonnax
		HARD PARTS (Continued)		
750	74824	Bell Housing, [F4A-EL / 4EAT-F] **(*Specify Top Bolts Size, With or Without Crank Sensor Hole & Cast #)**	1	
760	74701	Case, [F4A-EL / 4EAT-F] (13-Bolts to Bell) (*Uses Throttle Cable) (3-Threaded Bosses on Top For Wire Harness: (2) 6mm & (1) 12mm)	1	
760	74701A	Case, [F4A-EL / 4EAT-F] (13-Bolts to Bell) (*Uses Throttle Cable) (3-Threaded Bosses on Top For Wire Harness: (All (3) 6mm)	1	
760	74701B	Case, [F4A-EL / 4EAT-F] (13-Bolts to Bell) (*Uses Throttle Cable) (2-Threaded Bosses on Top For Wire Harness: (Both 6mm) (*Also a Boss With 12mm Hole that's not Threaded)	1	
760	74701K	Case, [F4A-EL] (13-Bolts to Bell) (*No Throttle Cable) (Cast # KIA) (4-Threaded Mount Bosses)	1	
760	74701C	Case, [F4A-EL / 4EAT-F] (13-Bolts to Bell) (*No Throttle Cable) (3-Threaded Mounting Bosses)	1	
765	74801	Pan, [F4A-EL / 4EAT-F] (Bottom) (1-5/8" at Deepest Point)	1	
765	74801A	Pan, [F4A-EL / 4EAT-F] (Bottom) (2-1/2" at Deepest Point)	1	

MAZDA/FORD (1-PAN) [F4A-EL/F4EAT/4EAT-F]

774	74922	Speed-O Housing, [F4A-EL / 4EAT-F] (22 Teeth Gear & 2-Prong Connector) (Cast # F7C6-17271-AB) (Aluminum Housing) (Plastic Connector)	1	
774	74922A	Speed-O Housing, [F4A-EL / 4EAT-F] (22 Teeth Gear & 2-Prong Rectangle Connector) (Cast # TR0100) (All Plastic)	1	
774	74922B	Speed-O Housing, [F4A-EL / 4EAT-F] (23 Teeth Gear & 2-Prong Connector) (Cast # FOC6-17271-AB) (Aluminum Housing) (Plastic Connector)	1	
799	74948	Nut, [F4A-EL / 4EAT-F] (Idler Gear)	1	
847	74817	Gear, [F4A-EL / 4EAT-F] (Speed-O Drive) (25 Teeth on Differential)	1	
848	74405	Gear, [F4A-EL / 4EAT-F] (Speed-O Driven) (20 Teeth)	1	
853	74810	Cushion, [F4A-EL / 4EAT-F] (Forward Clutch)	1	
854	74811	Retainer, [F4A-EL / 4EAT-F] (Reverse Clutch Spring)	1	
856	74813	Cushion, [F4A-EL / 4EAT-F] (Coast Clutch)	1	
857	74814	Waved Ring, [F4A-EL / 4EAT-F] (Low / Reverse Clutch) (*Solid Ring) 1990-97	1	
857	74814A	Waved Ring, [F4A-EL / 4EAT-F] (Low / Reverse Clutch) (*Split, Not Solid) 1997-Up	1	
900	K74895	Servo Assembly, [F4A-EL / 4EAT-F] (2-4 Band) (1.566”OD)	1	
900	K74895A	Servo Assembly, [F4A-EL / 4EAT-F] (2-4 Band) (2.314”OD)	1	
900	K74895B	Servo Assembly, [F4A-EL / 4EAT-F] (2-4 Band) (1.410”OD)	1	
901	K74891	Spring, [F4A-EL / 4EAT-F] (Servo) (3 Per Pack) (1.654” Long)	1	
901	K74892	Spring, [F4A-EL / 4EAT-F] (Servo) (3 Per Pack) (1.703” Long)	1	
901	K74893	Spring, [F4A-EL / 4EAT-F] (Servo) (3 Per Pack) (*Corrects Rough 1-2 & 3-4 Upshift & Rough 2-3)	1	
902	74896	Piston, [F4A-EL / 4EAT-F] (2-4 Servo)	1	
904	74988	Cover, [F4A-EL / 4EAT-F] (2-4 Servo)	1	
915	K74689	Strut Assembly, [F4A-EL / 4EAT-F] (2-4 Band)	1	
925	74843	Accumulator Assembly, [F4A-EL / 4EAT-F] (1-2 With 1-Spring)	1	
925	74843A	Accumulator Assembly, [F4A-EL / 4EAT-F] (1-2 With 2-Springs) (*1.9L Only)	1	
930	74843B	Accumulator Assembly, [F4A-EL / 4EAT-F] (2-3)	1	
945	74847	Accumulator, [F4A-EL / 4EAT-F] (Neutral / Reverse)	1	
	74844	Accumulator Assembly, [F4A-EL / 4EAT-F] (Neutral / Overdrive)	1	
960	74862	Piston, [F4A-EL / 4EAT-F] (3-4 Clutch)	1	
966	74865	Piston, [F4A-EL / 4EAT-F] (Reverse Clutch)	1	
967	74863	Piston, [F4A-EL / 4EAT-F] (Low / Reverse Clutch)	1	
969	74861	Piston, [F4A-EL / 4EAT-F] (Coast Clutch)	1	
970	74970	Spring, [F4A-EL / 4EAT-F] (3-4 Clutch Return)	1	36678441
976	74745	Spring, [F4A-EL / 4EAT-F] (Reverse Beveled Return)	1	
977	74971	Retainer W/Spring, [F4A-EL / 4EAT-F] (Low / Reverse Clutch)	1	
979	74972	Retainer W/Spring, [F4A-EL / 4EAT-F] (Coast Clutch)	1	
980	74930	Retainer, [F4A-EL / 4EAT-F] (3-4 Clutch Spring)	1	

TECHNICAL MANUALS (DOMESTIC)

Part #	Description	Year	Ref.	Qty
TM125C	Tech. Manual [125C]	1982-86	ATSG	1
TM125CS	Tech. Manual [125C]	1987-Up	ATSG	1
TM4L30E	Tech. Manual [4L30E]	1989-Up	ATSG	1
TM200C	Tech. Manual [TH200C]	1979-87	ATSG	1
TM200-4R	Tech. Manual [TH200-4R]	1981-90	ATSG	1
TM325-4L	Tech. Manual [TH325-4L]	1982-85	ATSG	1
TM350C	Tech. Manual [TH350 / 350C]		ATSG	1
TM400	Tech. Manual [TH400]	1964-91	ATSG	1
TM4L80-E	Tech. Manual [4L80E]	1991-Up	ATSG	1
TM4T40-E	Tech. Manual [4T40E]	1995-Up	ATSG	1
TM440-T4	Tech. Manual [TH440-T4]	1983-Up	ATSG	1
TM4T60-E	Tech. Manual [4T60-E]	1991-Up	ATSG	1
TM4T65	Tech. Manual [4T65E]	1997-Up	ATSG	1
TM4T65EUD	(Update) Handbook [4T65E]	1997-Up	ATSG	1
TM440-T4UD	(Update) Handbook [TH440-T4]	1986-Up	ATSG	1
TM440-T4UD2	(Update) (Vol. 2) [TH440-T4]		ATSG	1
TM4T80-E	Tech. Manual [4T80E]	1993-Up	ATSG	1
TM700R4	Tech. Manual [700R4]		ATSG	1
TM4L60	Tech. Manual [700R4]	1987-93	ATSG	1
TMGMCBTM	Code Book [4L60E] (Diagnostic)	1991-07	ATSG	1
TM4L60E	Tech. Manual [4L60E]		ATSG	1
TM4L60ES	(Update) Tech. Manual [4L60E]		ATSG	1
TM700R4S	(Supplement) [700R4]	1991	ATSG	1
TM5L40E	Tech. Manual [5L40E]		ATSG	1
TM6L80	Tech. Manual [6L80]		ATSG	1
TM1000 / 2000	[1000 / 2000] (Allison) (5 Speed)	2000-Up	ATSG	1
TMAT540	[AT540 / AT545] (Allison)		ATSG	1
TMSPRINT	[MX17] (Sprint, Suzuki)		ATSG	1
TMSATURN	(Saturn) [TAAT]	1991-Up	ATSG	1
TMVT20/VT25E	Tech. Manual [VT20 / VT25E]		ATSG	1
TMC5	Tech. Manual [C-4 / C-5]		ATSG	1
TMA4LD	Tech. Manual [A4LD]		ATSG	1
TM4R44E	[4R44E / 4R55E] (Eletric)	1995-Up	ATSG	1
TM5R55E	[5R55E] (5 Speed)	1997-Up	ATSG	1
TM5R55N	Tech. Manual [5R55N]	1999-Up	ATSG	1
TM5R55W/S	Tech. Manual [5R55S / 5R55W]	2002-Up	ATSG	1
TMC6	Tech. Manual [C-6]		ATSG	1
TME40D	Tech. Manual [E40D]		ATSG	1
TM4R100	Tech. Manual [4R100] (Ford Trucks)	1999-Up	ATSG	1

TECHNICAL MANUALS (DOMESTIC)

Part #	Description	Year	Ref.	Qty
TM4R100UD	(Update) Handbook [4R100]		ATSG	1
TME40DUD	(Update) [E40D]		ATSG	1
TM5R110W	Tech. Manual [5R110W] (Torqshift)		ATSG	1
TMAOD	Tech. Manual [AOD]	1980-93	ATSG	1
TMAODE	Tech. Manual [AODE]	1992-Up	ATSG	1
TM4R70W	(Update) Handbook [4R70W]		ATSG	1
TMZF6HP26	Tech. Manual [ZF6HP26]	2005-Up	ATSG	1
TMATX	Tech. Manual [ATX]	1981-Up	ATSG	1
TMAXOD	Tech. Manual [AXOD]	1986-90	ATSG	1
TMAXODE	Tech. Manual [AXODE / AX4S]	1991-Up	ATSG	1
TMAXODUD	(Update) Handbook [AXOD / AXODE]	1986-Up	ATSG	1
TMAXN	Tech. Manual [AX4N]	1995-Up	ATSG	1
TMCD4E	Tech. Manual [CD4E]		ATSG	1
TM4F27E	Tech. Manual [4F27E] (Ford, Focus)		ATSG	1
TMA904	Tech. Manual [A904]		ATSG	1
TMA500	Tech. Manual [A500]		ATSG	1
TM42RE	Tech. Manual [A500 /42RE/ 44RE]		ATSG	1
TMA727	Tech. Manual [A727]		ATSG	1
TMA500	Tech. Manual [A518 / A618]		ATSG	1
TM48RE	Tech. Manual [48RE]	2003-Up	ATSG	1
TM45RFE	Tech. Manual [45RFE] (Chrysler RWD)	1999-Up	ATSG	1
TM68RFE	Tech. Manual [68RFE]	2007-Up	ATSG	1
TM42RLE	Tech. Manual [42RLE] (4 Speed RWD)	2003-Up	ATSG	1
TMA404A470	Tech. Manual [A404/ A413/ A470/A670		ATSG	1
TMA604	Tech. Manual [A604]		ATSG	1
TMA604S	(Update) Handbook [A604]	4/1989-91	ATSG	1
TMA606	Tech. Manual [A606] (42LE)	1993-Up	ATSG	1
TM41TE/42LE	Code Book [A606] (42LE)	1993-Up	ATSG	1
TMG4AEL	[G4A] (Mazda) [G4A-EL]		ATSG	1
TMG4AHL	[G4A] (Mazda) [G4A-HL]		ATSG	1
TMGF4EAT	[GF4A-EL] (Mazda / Probe)		ATSG	1
TMF4EAT	[4EAT-F] (Mazda / Ford)	1990-Up	ATSG	1

NEW FROM TRANSGO®

Honda-LK

Lube Correction Kit-Fixes up to 6 transmissions.

Corrects/Prevents/Reduces:

Repeated Hot Trip Converter Blues. (Severe Converter Overheating)

Fits: The following Transmissions Only:

-Acura:

CL V6 Only: 98-03 M7ZA, BGFA, MGFA
3.2TL & TL: 99-09 B7VA, M7WA, B7WA, BDGA, BDHA
MDX: 01-09 MGHA, BGHA, MDKA, BDKA, BYFA.
RL: 05-08 MJBA

-Honda:

Accord V6 Only: 99-09 B7XA, BAYA, MAYA, B97A
Odyssey V6 Only: 99-09 B7TA, B7YA, BYBA, BGRA, PGRA, P36A B36A
Pilot: 03-09 BVGA, PVLA, PVGA, P35A, P34A
Ridgeline: 06-09 BJFA, MJFA, PSFA

-Saturn: **Vue:** 04-07-MDRA, MDPA



Honda-LK2

Lube Correction Kit-Fixes up to 6 transmissions.

Corrects/Prevents/Reduces:

Repeated Hot Trip Converter Blues. (Severe Converter Overheating)

Fits: The following Transmissions Only:

-Acura:

CL 4Cyl: 97-99 A6VA, B6VA
RSX 4Cyl: 02-06 MRMA
TSX 4Cyl: 04-09 MCTA, MM7A

-Honda:

Accord V6: 95-97 MPZA
Accord 4 Cyl: 94-09 MPOA, AOYA, BOYA, BAXA, MCLA, BCLA, M91A, B90A, MAXA
Odyssey 4 Cyl: 95-98 MPJA, MDWA
CRV: 97-09 M4TA, MDLA, MDMA, MRVA, MCVA, MKZA, MKYA, GPPA, GPLA, MZHA, MCJA, BZHA, BZJA
Civic: 96-09 A4RA, B4RA, B46A, M4RA, BDRA, S4RA, BMXA, SLXA, SPCA
Element: 03-09 BZNA, BZKA, MZKA, MNZA



"It just ain't FIXED without it!"®

TRANSGO®

Product Support
626-443-7451



ONLY ONE COMPANY has received multiple ENDORSEMENTS, RECOMMENDATIONS AND APPROVALS BY OEM'S.

Reduces Heat | Prevents Oxidation | Non-ash Formula | Eliminates Harsh Shifts | Extends Fluid Life | Prevents Comebacks





Call Oklahoma Transmission Supply toll free (800) 288-3668 for your free copy of the LUBEGARD 8th Edition ATF Conversion and Refill Chart, the industry's most comprehensive ATF source and the #1 voted *Top Shop Tool* for 13 years in a row.

PROPRIETARY TECHNOLOGY LXE SINCE 1993 THE PROFESSIONALS CHOICE SYNTHETIC



©2012 International Lubricants, Inc. All rights reserved.